P/N 05071 Common Mode Choke

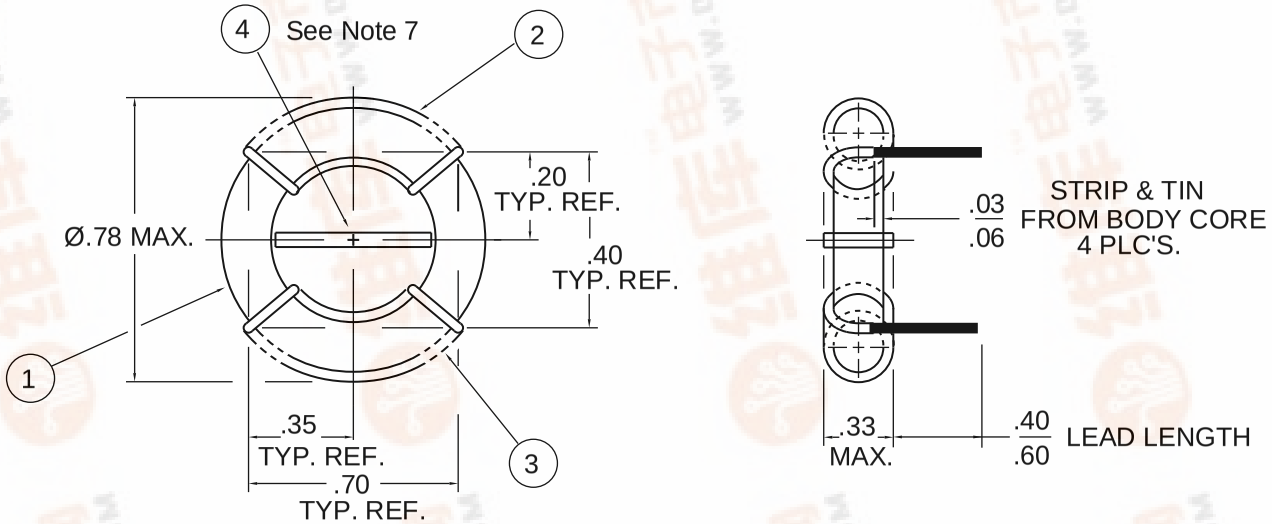

Notes:
1. Core Vicor #00627.
2. Magnet wire: Class 130˚C NEMA MW1000, NEMA MW28-C.
3. UL-CSA-VDE approvable. 2K VDC ISO winding to winding.
4. All assemblies to be free of nicks.
5. Overwinds permissable.
6. Leads conformable to lead dimension.
7. Bond to core using Lock-Tite Super Bonder #495 or equivalent.

捷多邦，专业PCB打样工厂，24小时加急出货
查询05071供应商
找PDF 一下 pdf.dzsc.com