PRELIMINARY

CY7C1370D
CY7C1372D

18-Mbit (512K x 36/1M x 18) Pipelined SRAM with NoBL™ Architecture

Features

- **Pin-compatible and functionally equivalent to ZBT™**
- **Supports 250-MHz bus operations with zero wait states**
  - **— Available speed grades are 250, 225, 200, and 167 MHz**
- **Internally self-timed output buffer control to eliminate the need to use asynchronous OE**
- **Fully registered (inputs and outputs) for pipelined operation**
- **Byte Write capability**
- **Single 3.3V power supply**
- **3.3V/2.5V I/O power supply**
- **Fast clock-to-output times**
  - **— 2.6 ns (for 250-MHz device)**
  - **— 2.8 ns (for 225-MHz device)**
  - **— 3.0 ns (for 200-MHz device)**
  - **— 3.4 ns (for 167-MHz device)**
- **Clock Enable ($\overline{CEN}$) pin to suspend operation**
- **Synchronous self-timed writes**
- **Available in lead-Free 100 TQFP, 119 BGA, and 165 fBGA packages**
- **IEEE 1149.1 JTAG Boundary Scan**
- **Burst capability—linear or interleaved burst order**
- **"ZZ" Sleep Mode option and Stop Clock option**

Functional Description

The CY7C1370D and CY7C1372D are 3.3V, 512K x 36 and 1 Mbit x 18 Synchronous pipelined burst SRAMs with No Bus Latency™ (NoBL™) logic, respectively. They are designed to support unlimited true back-to-back Read/Write operations with no wait states. The CY7C1370D and CY7C1372D are equipped with the advanced (NoBL) logic required to enable consecutive Read/Write operations with data being transferred on every clock cycle. This feature dramatically improves the throughput of data in systems that require frequent Write/Read transitions. The CY7C1370D and CY7C1372D are pin compatible and functionally equivalent to ZBT devices.

All synchronous inputs pass through input registers controlled by the rising edge of the clock. All data outputs pass through output registers controlled by the rising edge of the clock. The clock input is qualified by the Clock Enable ($\overline{CEN}$) signal, which when deasserted suspends operation and extends the previous clock cycle.

Write operations are controlled by the Byte Write Selects ($\overline{BW}_a$–$\overline{BW}_d$ for CY7C1370D and $\overline{BW}_a$–$\overline{BW}_b$ for CY7C1372D) and a Write Enable ($\overline{WE}$) input. All writes are conducted with on-chip synchronous self-timed write circuitry.

Three synchronous Chip Enables ($\overline{CE}_1$, CE_2, $\overline{CE}_3$) and an asynchronous Output Enable ($\overline{OE}$) provide for easy bank selection and output three-state control. In order to avoid bus contention, the output drivers are synchronously three-stated during the data portion of a write sequence.

Logic Block Diagram-CY7C1370D (512K x 36)

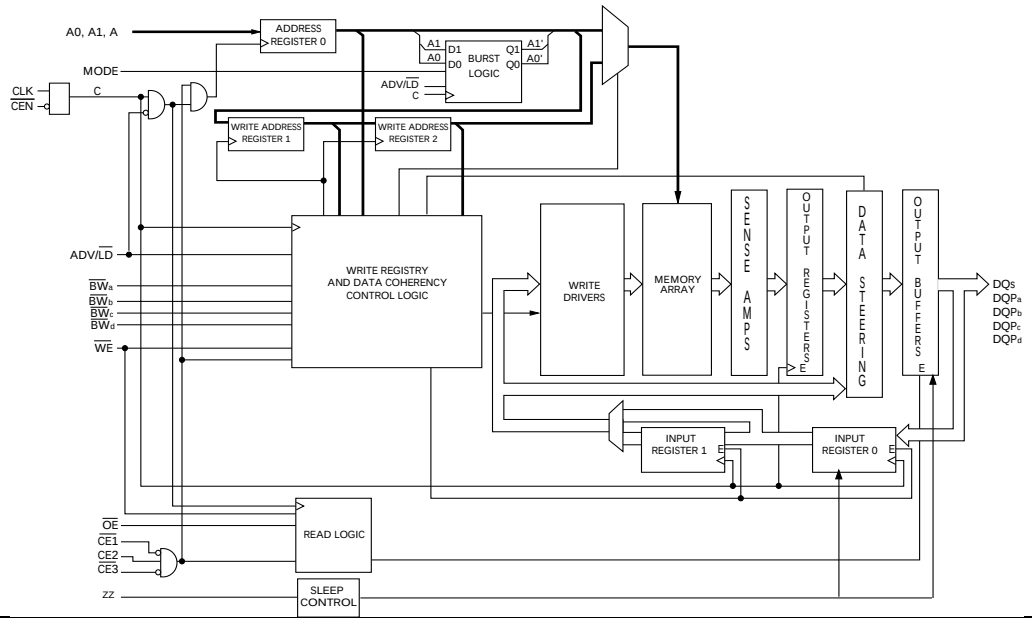

Logic Block Diagram-CY7C1372D (1 Mbit x 18)

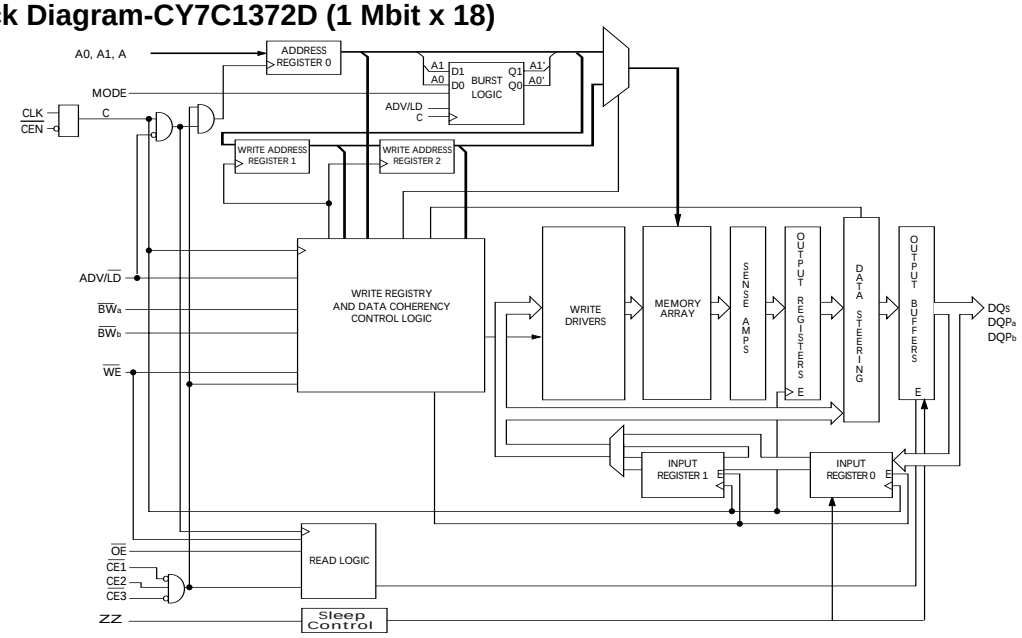

Selection Guide

	CY7C1370D-250 CY7C1372D-250	CY7C1370D-225 CY7C1372D-225	CY7C1370D-200 CY7C1372D-200	CY7C1370D-167 CY7C1372D-167	Unit
Maximum Access Time	2.6	2.8	3.0	3.4	ns
Maximum Operating Current	350	325	300	275	mA
Maximum CMOS Standby Current	70	70	70	70	mA

Shaded areas contain advance information. Please contact your local Cypress sales representative for availability of these parts.

Pin Configurations

100-pin TQFP Packages

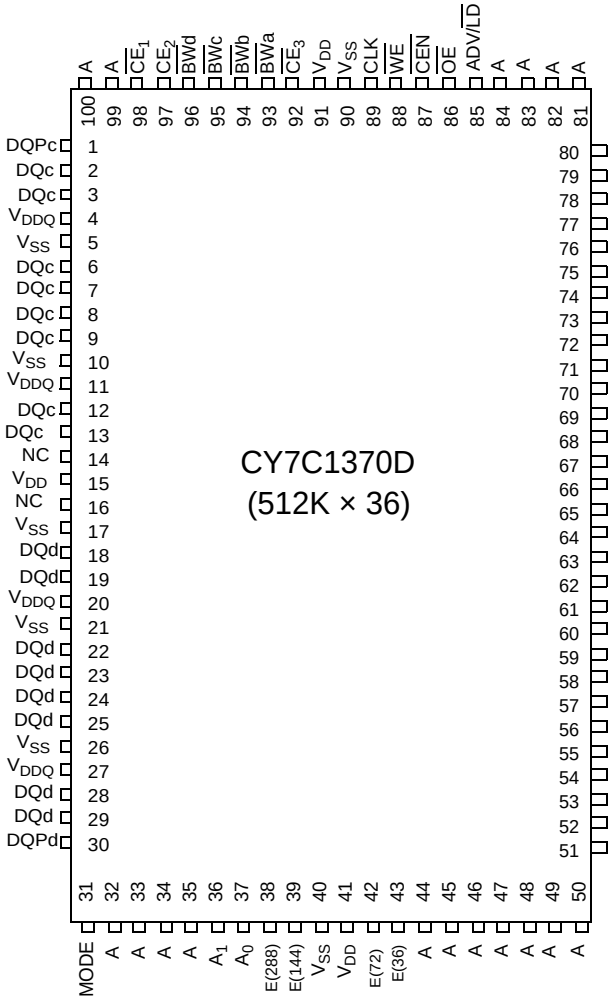

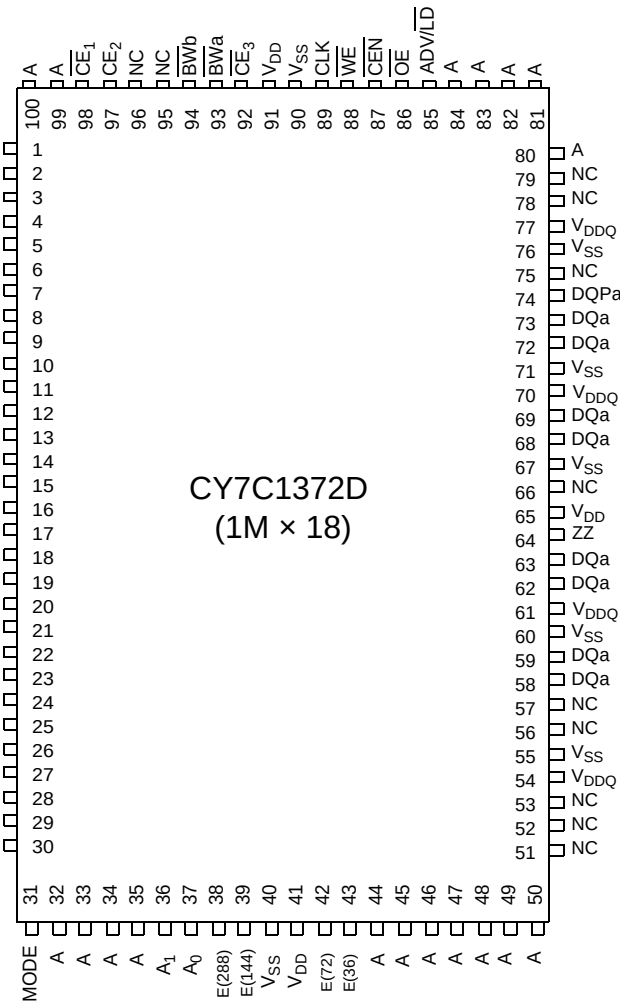

Pin Configurations (continued)

119-ball BGA Pinout
CY7C1370D (512K × 36) – BGA

	1	2	3	4	5	6	7
A	V_{DDQ}	A	A	A	A	A	V_{DDQ}
B	NC	CE_2	A	ADV/$\overline{LD}$	A	$\overline{CE}_3$	NC
C	NC	A	A	V_{DD}	A	A	NC
D	DQ_c	DQP_c	V_{SS}	NC	V_{SS}	DQP_b	DQ_b
E	DQ_c	DQ_c	V_{SS}	$\overline{CE}_1$	V_{SS}	DQ_b	DQ_b
F	V_{DDQ}	DQ_c	V_{SS}	$\overline{OE}$	V_{SS}	DQ_b	V_{DDQ}
G	DQ_c	DQ_c	$\overline{BW}_c$	A	$\overline{BW}_b$	DQ_b	DQ_b
H	DQ_c	DQ_c	V_{SS}	$\overline{WE}$	V_{SS}	DQ_b	DQ_b
J	V_{DDQ}	V_{DD}	NC	V_{DD}	NC	V_{DD}	V_{DDQ}
K	DQ_d	DQ_d	V_{SS}	CLK	V_{SS}	DQ_a	DQ_a
L	DQ_d	DQ_d	$\overline{BW}_d$	NC	$\overline{BW}_a$	DQ_a	DQ_a
M	V_{DDQ}	DQ_d	V_{SS}	$\overline{CEN}$	V_{SS}	DQ_a	V_{DDQ}
N	DQ_d	DQ_d	V_{SS}	A1	V_{SS}	DQ_a	DQ_a
P	DQ_d	DQP_d	V_{SS}	A0	V_{SS}	DQP_a	DQ_a
R	NC	A	MODE	V_{DD}	NC	A	NC
T	NC	E(72)	A	A	A	E(36)	ZZ
U	V_{DDQ}	TMS	TDI	TCK	TDO	NC	V_{DDQ}

CY7C1372D (1M x 18) – BGA

	1	2	3	4	5	6	7
A	V_{DDQ}	A	A	A	A	A	V_{DDQ}
B	NC	CE_2	A	ADV/$\overline{LD}$	A	$\overline{CE}_3$	NC
C	NC	A	A	V_{DD}	A	A	NC
D	DQ_b	NC	V_{SS}	NC	V_{SS}	DQP_a	NC
E	NC	DQ_b	V_{SS}	$\overline{CE}_1$	V_{SS}	NC	DQ_a
F	V_{DDQ}	NC	V_{SS}	$\overline{OE}$	V_{SS}	DQ_a	V_{DDQ}
G	NC	DQ_b	$\overline{BW}_b$	A	NC	NC	DQ_a
H	DQ_b	NC	V_{SS}	$\overline{WE}$	V_{SS}	DQ_a	NC
J	V_{DDQ}	V_{DD}	NC	V_{DD}	NC	V_{DD}	V_{DDQ}
K	NC	DQ_b	V_{SS}	CLK	V_{SS}	NC	DQ_a
L	DQ_b	NC	NC	NC	$\overline{BW}_a$	DQ_a	NC
M	V_{DDQ}	DQ_b	V_{SS}	$\overline{CEN}$	V_{SS}	NC	V_{DDQ}
N	DQ_b	NC	V_{SS}	A1	V_{SS}	DQ_a	NC
P	NC	DQP_b	V_{SS}	A0	V_{SS}	NC	DQ_a
R	NC	A	MODE	V_{DD}	NC	A	NC
T	E(72)	A	A	E(36)	A	A	ZZ
U	V_{DDQ}	TMS	TDI	TCK	TDO	NC	V_{DDQ}

Pin Configurations (continued)

165-Ball fBGA Pinout

CY7C1370D (512K × 36) – fBGA

	1	2	3	4	5	6	7	8	9	10	11
A	E(288)	A	$\overline{CE}_1$	$\overline{BW}_c$	$\overline{BW}_b$	$\overline{CE}_3$	$\overline{CEN}$	ADV/$\overline{LD}$	A	A	NC
B	NC	A	CE2	$\overline{BW}_d$	$\overline{BW}_a$	CLK	$\overline{WE}$	$\overline{OE}$	A	A	E(144)
C	DQP_c	NC	V_{DDQ}	V_{SS}	V_{SS}	V_{SS}	V_{SS}	V_{SS}	V_{DDQ}	NC	DQP_b
D	DQ_c	DQ_c	V_{DDQ}	V_{DD}	V_{SS}	V_{SS}	V_{SS}	V_{DD}	V_{DDQ}	DQ_b	DQ_b
E	DQ_c	DQ_c	V_{DDQ}	V_{DD}	V_{SS}	V_{SS}	V_{SS}	V_{DD}	V_{DDQ}	DQ_b	DQ_b
F	DQ_c	DQ_c	V_{DDQ}	V_{DD}	V_{SS}	V_{SS}	V_{SS}	V_{DD}	V_{DDQ}	DQ_b	DQ_b
G	DQ_c	DQ_c	V_{DDQ}	V_{DD}	V_{SS}	V_{SS}	V_{SS}	V_{DD}	V_{DDQ}	DQ_b	DQ_b
H	NC	NC	NC	V_{DD}	V_{SS}	V_{SS}	V_{SS}	V_{DD}	NC	NC	ZZ
J	DQ_d	DQ_d	V_{DDQ}	V_{DD}	V_{SS}	V_{SS}	V_{SS}	V_{DD}	V_{DDQ}	DQ_a	DQ_a
K	DQ_d	DQ_d	V_{DDQ}	V_{DD}	V_{SS}	V_{SS}	V_{SS}	V_{DD}	V_{DDQ}	DQ_a	DQ_a
L	DQ_d	DQ_d	V_{DDQ}	V_{DD}	V_{SS}	V_{SS}	V_{SS}	V_{DD}	V_{DDQ}	DQ_a	DQ_a
M	DQ_d	DQ_d	V_{DDQ}	V_{DD}	V_{SS}	V_{SS}	V_{SS}	V_{DD}	V_{DDQ}	DQ_a	DQ_a
N	DQP_d	NC	V_{DDQ}	V_{SS}	NC	NC	NC	V_{SS}	V_{DDQ}	NC	DQP_a
P	NC	E(72)	A	A	TDI	A1	TDO	A	A	A	NC
R	MODE	E(36)	A	A	TMS	A0	TCK	A	A	A	A

CY7C1372D (1M × 18) – fBGA

	1	2	3	4	5	6	7	8	9	10	11
A	E(288)	A	$\overline{CE}_1$	$\overline{BW}_b$	NC	$\overline{CE}_3$	$\overline{CEN}$	ADV/$\overline{LD}$	A	A	A
B	NC	A	CE2	NC	$\overline{BW}_a$	CLK	$\overline{WE}$	$\overline{OE}$	A	A	E(144)
C	NC	NC	V_{DDQ}	V_{SS}	V_{SS}	V_{SS}	V_{SS}	V_{SS}	V_{DDQ}	NC	DQP_a
D	NC	DQ_b	V_{DDQ}	V_{DD}	V_{SS}	V_{SS}	V_{SS}	V_{DD}	V_{DDQ}	NC	DQ_a
E	NC	DQ_b	V_{DDQ}	V_{DD}	V_{SS}	V_{SS}	V_{SS}	V_{DD}	V_{DDQ}	NC	DQ_a
F	NC	DQ_b	V_{DDQ}	V_{DD}	V_{SS}	V_{SS}	V_{SS}	V_{DD}	V_{DDQ}	NC	DQ_a
G	NC	DQ_b	V_{DDQ}	V_{DD}	V_{SS}	V_{SS}	V_{SS}	V_{DD}	V_{DDQ}	NC	DQ_a
H	NC	NC	NC	V_{DD}	V_{SS}	V_{SS}	V_{SS}	V_{DD}	NC	NC	ZZ
J	DQ_b	NC	V_{DDQ}	V_{DD}	V_{SS}	V_{SS}	V_{SS}	V_{DD}	V_{DDQ}	DQ_a	NC
K	DQ_b	NC	V_{DDQ}	V_{DD}	V_{SS}	V_{SS}	V_{SS}	V_{DD}	V_{DDQ}	DQ_a	NC
L	DQ_b	NC	V_{DDQ}	V_{DD}	V_{SS}	V_{SS}	V_{SS}	V_{DD}	V_{DDQ}	DQ_a	NC
M	DQ_b	NC	V_{DDQ}	V_{DD}	V_{SS}	V_{SS}	V_{SS}	V_{DD}	V_{DDQ}	DQ_a	NC
N	DQP_b	NC	V_{DDQ}	V_{SS}	NC	NC	NC	V_{SS}	V_{DDQ}	NC	NC
P	NC	E(72)	A	A	TDI	A1	TDO	A	A	A	NC
R	MODE	E(36)	A	A	TMS	A0	TCK	A	A	A	A

Pin Definitions

Pin Name	I/O Type	Pin Description
A0 A1 A	Input-Synchronous	**Address Inputs used to select one of the address locations**. Sampled at the rising edge of the CLK.
$\overline{BW}_a$ $\overline{BW}_b$ $\overline{BW}_c$ $\overline{BW}_d$	Input-Synchronous	**Byte Write Select Inputs, active LOW**. Qualified with $\overline{WE}$ to conduct writes to the SRAM. Sampled on the rising edge of CLK. BW_a controls DQ_a and DQP_a, $\overline{BW}_b$ controls DQ_b and DQP_b, BW_c controls DQ_c and DQP_c, BW_d controls DQ_d and DQP_d.
$\overline{WE}$	Input-Synchronous	**Write Enable Input, active LOW**. Sampled on the rising edge of CLK if $\overline{CEN}$ is active LOW. This signal must be asserted LOW to initiate a write sequence.
ADV/$\overline{LD}$	Input-Synchronous	**Advance/Load Input used to advance the on-chip address counter or load a new address**. When HIGH (and $\overline{CEN}$ is asserted LOW) the internal burst counter is advanced. When LOW, a new address can be loaded into the device for an access. After being deselected, ADV/$\overline{LD}$ should be driven LOW in order to load a new address.
CLK	Input-Clock	**Clock Input**. Used to capture all synchronous inputs to the device. CLK is qualified with $\overline{CEN}$. CLK is only recognized if $\overline{CEN}$ is active LOW.
$\overline{CE}_1$	Input-Synchronous	**Chip Enable 1 Input, active LOW**. Sampled on the rising edge of CLK. Used in conjunction with CE_2 and $\overline{CE}_3$ to select/deselect the device.
CE_2	Input-Synchronous	**Chip Enable 2 Input, active HIGH**. Sampled on the rising edge of CLK. Used in conjunction with $\overline{CE}_1$ and $\overline{CE}_3$ to select/deselect the device.
$\overline{CE}_3$	Input-Synchronous	**Chip Enable 3 Input, active LOW**. Sampled on the rising edge of CLK. Used in conjunction with $\overline{CE}_1$ and CE_2 to select/deselect the device.
$\overline{OE}$	Input-Asynchronous	**Output Enable, active LOW**. Combined with the synchronous logic block inside the device to control the direction of the I/O pins. When LOW, the I/O pins are allowed to behave as outputs. When deasserted HIGH, I/O pins are three-stated, and act as input data pins. $\overline{OE}$ is masked during the data portion of a write sequence, during the first clock when emerging from a deselected state and when the device has been deselected.
$\overline{CEN}$	Input-Synchronous	**Clock Enable Input, active LOW**. When asserted LOW the clock signal is recognized by the SRAM. When deasserted HIGH the clock signal is masked. Since deasserting $\overline{CEN}$ does not deselect the device, $\overline{CEN}$ can be used to extend the previous cycle when required.
DQ_S	I/O-Synchronous	**Bidirectional Data I/O lines**. As inputs, they feed into an on-chip data register that is triggered by the rising edge of CLK. As outputs, they deliver the data contained in the memory location specified by $A_{[17:0]}$ during the previous clock rise of the read cycle. The direction of the pins is controlled by $\overline{OE}$ and the internal control logic. When $\overline{OE}$ is asserted LOW, the pins can behave as outputs. When HIGH, DQ_a–DQ_d are placed in a three-state condition. The outputs are automatically three-stated during the data portion of a write sequence, during the first clock when emerging from a deselected state, and when the device is deselected, regardless of the state of $\overline{OE}$.
DQP_X	I/O-Synchronous	**Bidirectional Data Parity I/O lines**. Functionally, these signals are identical to DQ_S. During write sequences, DQP_a is controlled by $\overline{BW}_a$, DQP_b is controlled by $\overline{BW}_b$, DQP_c is controlled by $\overline{BW}_c$, and DQP_d is controlled by $\overline{BW}_d$.
MODE	Input Strap Pin	**Mode Input**. Selects the burst order of the device. Tied HIGH selects the interleaved burst order. Pulled LOW selects the linear burst order. MODE should not change states during operation. When left floating MODE will default HIGH, to an interleaved burst order.
TDO	JTAG serial output Synchronous	**Serial data-out to the JTAG circuit**. Delivers data on the negative edge of TCK.
TDI	JTAG serial input Synchronous	**Serial data-In to the JTAG circuit**. Sampled on the rising edge of TCK.
TMS	Test Mode Select Synchronous	**This pin controls the Test Access Port state machine**. Sampled on the rising edge of TCK.
TCK	JTAG-Clock	**Clock input to the JTAG circuitry**.
V_{DD}	Power Supply	**Power supply inputs to the core of the device**.
V_{DDQ}	I/O Power Supply	**Power supply for the I/O circuitry**.
V_{SS}	Ground	**Ground for the device**. Should be connected to ground of the system.

Pin Definitions (continued)

Pin Name	I/O Type	Pin Description
NC	–	**No connects**. This pin is not connected to the die.
E(36,72, 144, 288)	–	**These pins are not connected**. They will be used for expansion to the 36M, 72M, 144M and 288M densities.
ZZ	Input-Asynchronous	**ZZ "sleep" Input**. This active HIGH input places the device in a non-time critical "sleep" condition with data integrity preserved. During normal operation, this pin can be connected to V_{SS} or left floating.

Introduction

Functional Overview

The CY7C1370D and CY7C1372D are synchronous-pipelined Burst NoBL SRAMs designed specifically to eliminate wait states during Write/Read transitions. All synchronous inputs pass through input registers controlled by the rising edge of the clock. The clock signal is qualified with the Clock Enable input signal (CEN). If CEN is HIGH, the clock signal is not recognized and all internal states are maintained. All synchronous operations are qualified with CEN. All data outputs pass through output registers controlled by the rising edge of the clock. Maximum access delay from the clock rise (t_{CO}) is 2.6 ns (250-MHz device).

Accesses can be initiated by asserting all three Chip Enables (CE_1, CE_2, CE_3) active at the rising edge of the clock. If Clock Enable (CEN) is active LOW and ADV/LD is asserted LOW, the address presented to the device will be latched. The access can either be a read or write operation, depending on the status of the Write Enable (WE). BW_X can be used to conduct byte write operations.

Write operations are qualified by the Write Enable (WE). All writes are simplified with on-chip synchronous self-timed write circuitry.

Three synchronous Chip Enables (CE_1, CE_2, CE_3) and an asynchronous Output Enable (OE) simplify depth expansion. All operations (Reads, Writes, and Deselects) are pipelined. ADV/LD should be driven LOW once the device has been deselected in order to load a new address for the next operation.

Single Read Accesses

A read access is initiated when the following conditions are satisfied at clock rise: (1) CEN is asserted LOW, (2) CE_1, CE_2, and CE_3 are ALL asserted active, (3) the Write Enable input signal WE is deasserted HIGH, and (4) ADV/LD is asserted LOW. The address presented to the address inputs is latched into the Address Register and presented to the memory core and control logic. The control logic determines that a read access is in progress and allows the requested data to propagate to the input of the output register. At the rising edge of the next clock the requested data is allowed to propagate through the output register and onto the data bus within 2.6 ns (250-MHz device) provided OE is active LOW. After the first clock of the read access the output buffers are controlled by OE and the internal control logic. OE must be driven LOW in order for the device to drive out the requested data. During the second clock, a subsequent operation (Read/Write/Deselect) can be initiated. Deselecting the device is also pipelined. Therefore, when the SRAM is deselected at clock rise by one of the chip enable signals, its output will three-state following the next clock rise.

Burst Read Accesses

The CY7C1370D and CY7C1372D have an on-chip burst counter that allows the user the ability to supply a single address and conduct up to four Reads without reasserting the address inputs. ADV/LD must be driven LOW in order to load a new address into the SRAM, as described in the Single Read Access section above. The sequence of the burst counter is determined by the MODE input signal. A LOW input on MODE selects a linear burst mode, a HIGH selects an interleaved burst sequence. Both burst counters use A0 and A1 in the burst sequence, and will wrap-around when incremented sufficiently. A HIGH input on ADV/LD will increment the internal burst counter regardless of the state of chip enables inputs or WE. WE is latched at the beginning of a burst cycle. Therefore, the type of access (Read or Write) is maintained throughout the burst sequence.

Single Write Accesses

Write access are initiated when the following conditions are satisfied at clock rise: (1) CEN is asserted LOW, (2) CE_1, CE_2, and CE_3 are ALL asserted active, and (3) the write signal WE is asserted LOW. The address presented is loaded into the Address Register. The write signals are latched into the Control Logic block.

On the subsequent clock rise the data lines are automatically three-stated regardless of the state of the OE input signal. This allows the external logic to present the data on DQ and DQP ($DQ_{a,b,c,d}$/$DQP_{a,b,c,d}$ for CY7C1370D and $DQ_{a,b}$/$DQP_{a,b}$ for CY7C1372D). In addition, the address for the subsequent access (Read/Write/Deselect) is latched into the Address Register (provided the appropriate control signals are asserted).

On the next clock rise the data presented to DQ and DQP ($DQ_{a,b,c,d}$/$DQP_{a,b,c,d}$ for CY7C1370D & $DQ_{a,b}$/$DQP_{a,b}$ for CY7C1372D) (or a subset for byte write operations, see Write Cycle Description table for details) inputs is latched into the device and the write is complete.

The data written during the write operation is controlled by BW ($BW_{a,b,c,d}$ for CY7C1370D and $BW_{a,b}$ for CY7C1372D) signals. The CY7C1370D/CY7C1372D provides byte write capability that is described in the Write Cycle Description table. Asserting the Write Enable input (WE) with the selected Byte Write Select (BW) input will selectively write to only the desired bytes. Bytes not selected during a byte write operation will remain unaltered. A synchronous self-timed write mechanism has been provided to simplify the write operations. Byte write capability has been included in order to greatly simplify Read/Modify/Write sequences, which can be reduced to simple byte write operations.

Because the CY7C1370D and CY7C1372D are common I/O devices, data should not be driven into the device while the

outputs are active. The Output Enable ($\overline{OE}$) can be deasserted HIGH before presenting data to the DQ and DQP ($DQ_{a,b,c,d}/DQP_{a,b,c,d}$ for CY7C1370D and $DQ_{a,b}/DQP_{a,b}$ for CY7C1372D) inputs. Doing so will three-state the output drivers. As a safety precaution, DQ and DQP ($DQ_{a,b,c,d}/DQP_{a,b,c,d}$ for CY7C1370D and $DQ_{a,b}/DQP_{a,b}$ for CY7C1372D) are automatically three-stated during the data portion of a write cycle, regardless of the state of $\overline{OE}$.

Burst Write Accesses

The CY7C1370D/CY7C1372D has an on-chip burst counter that allows the user the ability to supply a single address and conduct up to four write operations without reasserting the address inputs. ADV/$\overline{LD}$ must be driven LOW in order to load the initial address, as described in the Single Write Access section above. When ADV/$\overline{LD}$ is driven HIGH on the subsequent clock rise, the chip enables ($\overline{CE}_1$, CE_2, and $\overline{CE}_3$) and $\overline{WE}$ inputs are ignored and the burst counter is incremented. The correct BW ($\overline{BW}_{a,b,c,d}$ for CY7C1370D and $\overline{BW}_{a,b}$ for CY7C1372D) inputs must be driven in each cycle of the burst write in order to write the correct bytes of data.

Sleep Mode

The ZZ input pin is an asynchronous input. Asserting ZZ places the SRAM in a power conservation “sleep” mode. Two clock cycles are required to enter into or exit from this “sleep” mode. While in this mode, data integrity is guaranteed. Accesses pending when entering the “sleep” mode are not considered valid nor is the completion of the operation guaranteed. The device must be deselected prior to entering the “sleep” mode. $\overline{CE}_1$, CE_2, and $\overline{CE}_3$, must remain inactive for the duration of t_{ZZREC} after the ZZ input returns LOW.

Interleaved Burst Address Table (MODE = Floating or V_{DD})

First Address	Second Address	Third Address	Fourth Address
A1,A0	A1,A0	A1,A0	A1,A0
00	01	10	11
01	00	11	10
10	11	00	01
11	10	01	00

Linear Burst Address Table (MODE = GND)

First Address	Second Address	Third Address	Fourth Address
A1,A0	A1,A0	A1,A0	A1,A0
00	01	10	11
01	10	11	00
10	11	00	01
11	00	01	10

ZZ Mode Electrical Characteristics

Parameter	Description	Test Conditions	Min.	Max	Unit
I_{DDZZ}	Sleep mode standby current	$ZZ \geq V_{DD} - 0.2V$		80	mA
t_{ZZS}	Device operation to ZZ	$ZZ \geq V_{DD} - 0.2V$		$2t_{CYC}$	ns
t_{ZZREC}	ZZ recovery time	$ZZ \leq 0.2V$	$2t_{CYC}$		ns
t_{ZZI}	ZZ active to sleep current	This parameter is sampled		$2t_{CYC}$	ns
t_{RZZI}	ZZ Inactive to exit sleep current	This parameter is sampled	0		ns

Truth Table[1, 2, 3, 4, 5, 6, 7]

Operation	Address Used	$\overline{CE}$	ZZ	ADV/$\overline{LD}$	$\overline{WE}$	$\overline{BW_X}$	$\overline{OE}$	$\overline{CEN}$	CLK	DQ
Deselect Cycle	None	H	L	L	X	X	X	L	L-H	Three-State
Continue Deselect Cycle	None	X	L	H	X	X	X	L	L-H	Three-State
Read Cycle (Begin Burst)	External	L	L	L	H	X	L	L	L-H	Data Out (Q)
Read Cycle (Continue Burst)	Next	X	L	H	X	X	L	L	L-H	Data Out (Q)
NOP/Dummy Read (Begin Burst)	External	L	L	L	H	X	H	L	L-H	Three-State
Dummy Read (Continue Burst)	Next	X	L	H	X	X	H	L	L-H	Three-State
Write Cycle (Begin Burst)	External	L	L	L	L	L	X	L	L-H	Data In (D)
Write Cycle (Continue Burst)	Next	X	L	H	X	L	X	L	L-H	Data In (D)
NOP/Write Abort (Begin Burst)	None	L	L	L	L	H	X	L	L-H	Three-State
Write Abort (Continue Burst)	Next	X	L	H	X	H	X	L	L-H	Three-State
Ignore Clock Edge (Stall)	Current	X	L	X	X	X	X	H	L-H	–
Sleep Mode	None	X	H	X	X	X	X	X	X	Three-State

Notes:

1. X = “Don't Care”, H = Logic HIGH, L = Logic LOW, $\overline{CE}$ stands for ALL Chip Enables active. $\overline{BW}$x = L signifies at least one Byte Write Select is active, $\overline{BW}$x = Valid signifies that the desired byte write selects are asserted, see Write Cycle Description table for details.
2. Write is defined by $\overline{WE}$ and $\overline{BW_X}$. See Write Cycle Description table for details.
3. When a write cycle is detected, all I/Os are tri-stated, even during byte writes.
4. The DQ and DQP pins are controlled by the current cycle and the $\overline{OE}$ signal.
5. $\overline{CEN}$ = H inserts wait states.
6. Device will power-up deselected and the I/Os in a tri-state condition, regardless of $\overline{OE}$.
7. $\overline{OE}$ is asynchronous and is not sampled with the clock rise. It is masked internally during write cycles.During a read cycle DQ_s and DQP_X = Three-state when $\overline{OE}$ is inactive or when the device is deselected, and DQ_s = data when $\overline{OE}$ is active.
8. Table only lists a partial listing of the byte write combinations. Any Combination of $\overline{BW_X}$ is valid Appropriate write will be done based on which byte write is active.

Partial Write Cycle Description[1, 2, 3, 8]

Function (CY7C1370D)	$\overline{WE}$	$\overline{BW_d}$	$\overline{BW_c}$	$\overline{BW_b}$	$\overline{BW_a}$
Read	H	X	X	X	X
Write – No bytes written	L	H	H	H	H
Write Byte a – (DQ_a and DQP_a)	L	H	H	H	L
Write Byte b – (DQ_b and DQP_b)	L	H	H	L	H
Write Bytes b, a	L	H	H	L	L
Write Byte c – (DQ_c and DQP_c)	L	H	L	H	H
Write Bytes c, a	L	H	L	H	L
Write Bytes c, b	L	H	L	L	H
Write Bytes c, b, a	L	H	L	L	L
Write Byte d – (DQ_d and DQP_d)	L	L	H	H	H
Write Bytes d, a	L	L	H	H	L
Write Bytes d, b	L	L	H	L	H
Write Bytes d, b, a	L	L	H	L	L
Write Bytes d, c	L	L	L	H	H
Write Bytes d, c, a	L	L	L	H	L
Write Bytes d, c, b	L	L	L	L	H
Write All Bytes	L	L	L	L	L

Function (CY7C1372D)	$\overline{WE}$	$\overline{BW_b}$	$\overline{BW_a}$
Read	H	x	x
Write – No Bytes Written	L	H	H
Write Byte a – (DQ_a and DQP_a)	L	H	L
Write Byte b – (DQ_b and DQP_b)	L	L	H
Write Both Bytes	L	L	L

IEEE 1149.1 Serial Boundary Scan (JTAG)

The CY7C1370D/CY7C1372D incorporates a serial boundary scan test access port (TAP). This part is fully compliant with 1149.1. The TAP operates using JEDEC-standard 3.3V or 2.5V I/O logic levels.

The CY7C1370D/CY7C1372D contains a TAP controller, instruction register, boundary scan register, bypass register, and ID register.

Disabling the JTAG Feature

It is possible to operate the SRAM without using the JTAG feature. To disable the TAP controller, TCK must be tied LOW(V_{SS}) to prevent clocking of the device. TDI and TMS are internally pulled up and may be unconnected. They may alternately be connected to V_{DD} through a pull-up resistor. TDO should be left unconnected. Upon power-up, the device will come up in a reset state which will not interfere with the operation of the device.

TAP Controller State Diagram

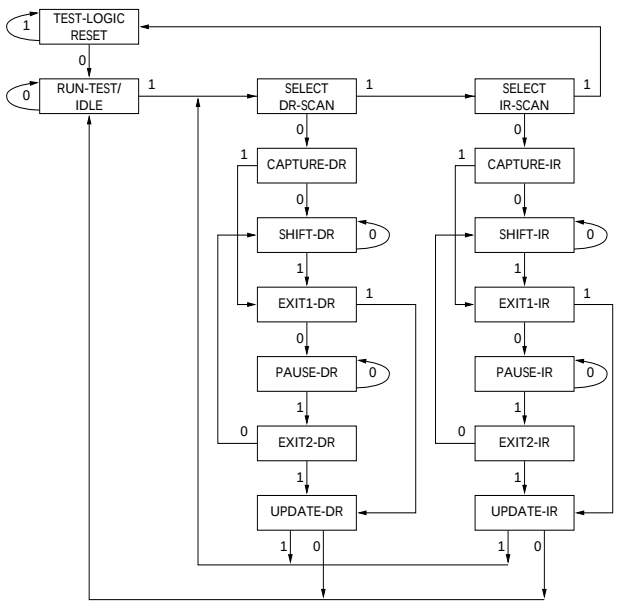

The 0/1 next to each state represents the value of TMS at the rising edge of TCK.

Test Access Port (TAP)

Test Clock (TCK)

The test clock is used only with the TAP controller. All inputs are captured on the rising edge of TCK. All outputs are driven from the falling edge of TCK.

Test Mode Select (TMS)

The TMS input is used to give commands to the TAP controller and is sampled on the rising edge of TCK. It is allowable to leave this ball unconnected if the TAP is not used. The ball is pulled up internally, resulting in a logic HIGH level.

Test Data-In (TDI)

The TDI ball is used to serially input information into the registers and can be connected to the input of any of the registers. The register between TDI and TDO is chosen by the instruction that is loaded into the TAP instruction register. TDI is internally pulled up and can be unconnected if the TAP is unused in an application. TDI is connected to the most significant bit (MSB) of any register. (See Tap Controller Block Diagram.)

Test Data-Out (TDO)

The TDO output ball is used to serially clock data-out from the registers. The output is active depending upon the current state of the TAP state machine. The output changes on the falling edge of TCK. TDO is connected to the least significant bit (LSB) of any register. (See Tap Controller State Diagram.)

TAP Controller Block Diagram

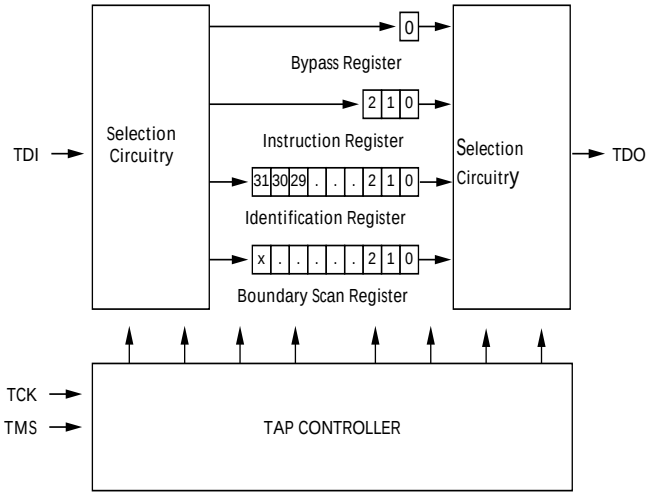

Performing a TAP Reset

A Reset is performed by forcing TMS HIGH (V_{DD}) for five rising edges of TCK. This Reset does not affect the operation of the SRAM and may be performed while the SRAM is operating.

At power-up, the TAP is reset internally to ensure that TDO comes up in a High-Z state.

TAP Registers

Registers are connected between the TDI and TDO balls and allow data to be scanned into and out of the SRAM test circuitry. Only one register can be selected at a time through the instruction register. Data is serially loaded into the TDI ball on the rising edge of TCK. Data is output on the TDO ball on the falling edge of TCK.

Instruction Register

Three-bit instructions can be serially loaded into the instruction register. This register is loaded when it is placed between the TDI and TDO balls as shown in the Tap Controller Block Diagram. Upon power-up, the instruction register is loaded with the IDCODE instruction. It is also loaded with the IDCODE instruction if the controller is placed in a reset state as described in the previous section.

When the TAP controller is in the Capture-IR state, the two least significant bits are loaded with a binary “01” pattern to allow for fault isolation of the board-level serial test data path.

Bypass Register

To save time when serially shifting data through registers, it is sometimes advantageous to skip certain chips. The bypass-register is a single-bit register that can be placed between the TDI and TDO balls. This allows data to be shifted through the SRAM with minimal delay. The bypass register is set LOW (V_{SS}) when the BYPASS instruction is executed.

Boundary Scan Register

The boundary scan register is connected to all the input and bidirectional balls on the SRAM.

The boundary scan register is loaded with the contents of the RAM I/O ring when the TAP controller is in the Capture-DR state and is then placed between the TDI and TDO balls when

the controller is moved to the Shift-DR state. The EXTEST, SAMPLE/PRELOAD and SAMPLE Z instructions can be used to capture the contents of the I/O ring.

The Boundary Scan Order tables show the order in which the bits are connected. Each bit corresponds to one of the bumps on the SRAM package. The MSB of the register is connected to TDI and the LSB is connected to TDO.

Identification (ID) Register

The ID register is loaded with a vendor-specific, 32-bit code during the Capture-DR state when the IDCODE command is loaded in the instruction register. The IDCODE is hardwired into the SRAM and can be shifted out when the TAP controller is in the Shift-DR state. The ID register has a vendor code and other information described in the Identification Register Definitions table.

TAP Instruction Set

Overview

Eight different instructions are possible with the three-bit instruction register. All combinations are listed in the Instruction Codes table. Three of these instructions are listed as RESERVED and should not be used. The other five instructions are described in detail below.

The TAP controller used in this SRAM is not fully compliant to the 1149.1 convention because some of the mandatory 1149.1 instructions are not fully implemented.

The TAP controller cannot be used to load address data or control signals into the SRAM and cannot preload the I/O buffers. The SRAM does not implement the 1149.1 commands EXTEST or INTEST or the PRELOAD portion of SAMPLE/PRELOAD; rather, it performs a capture of the I/O ring when these instructions are executed.

Instructions are loaded into the TAP controller during the Shift-IR state when the instruction register is placed between TDI and TDO. During this state, instructions are shifted through the instruction register through the TDI and TDO balls. To execute the instruction once it is shifted in, the TAP controller needs to be moved into the Update-IR state.

EXTEST

EXTEST is a mandatory 1149.1 instruction which is to be executed whenever the instruction register is loaded with all 0s. EXTEST is not implemented in this SRAM TAP controller, and therefore this device is not compliant to 1149.1. The TAP controller does recognize an all-0 instruction.

When an EXTEST instruction is loaded into the instruction register, the SRAM responds as if a SAMPLE/PRELOAD instruction has been loaded. There is one difference between the two instructions. Unlike the SAMPLE/PRELOAD instruction, EXTEST places the SRAM outputs in a High-Z state.

IDCODE

The IDCODE instruction causes a vendor-specific, 32-bit code to be loaded into the instruction register. It also places the instruction register between the TDI and TDO balls and allows the IDCODE to be shifted out of the device when the TAP controller enters the Shift-DR state.

The IDCODE instruction is loaded into the instruction register upon power-up or whenever the TAP controller is given a test logic reset state.

SAMPLE Z

The SAMPLE Z instruction causes the boundary scan register to be connected between the TDI and TDO balls when the TAP controller is in a Shift-DR state. It also places all SRAM outputs into a High-Z state.

SAMPLE/PRELOAD

SAMPLE/PRELOAD is a 1149.1-mandatory instruction. When the SAMPLE/PRELOAD instructions are loaded into the instruction register and the TAP controller is in the Capture-DR state, a snapshot of data on the inputs and output pins is captured in the boundary scan register.

The user must be aware that the TAP controller clock can only operate at a frequency up to 20 MHz, while the SRAM clock operates more than an order of magnitude faster. Because there is a large difference in the clock frequencies, it is possible that during the Capture-DR state, an input or output will undergo a transition. The TAP may then try to capture a signal while in transition (metastable state). This will not harm the device, but there is no guarantee as to the value that will be captured. Repeatable results may not be possible.

To guarantee that the boundary scan register will capture the correct value of a signal, the SRAM signal must be stabilized long enough to meet the TAP controller's capture set-up plus hold times (t_{CS} and t_{CH}). The SRAM clock input might not be captured correctly if there is no way in a design to stop (or slow) the clock during a SAMPLE/PRELOAD instruction. If this is an issue, it is still possible to capture all other signals and simply ignore the value of the CK and $\overline{CK}$ captured in the boundary scan register.

Once the data is captured, it is possible to shift out the data by putting the TAP into the Shift-DR state. This places the boundary scan register between the TDI and TDO pins.

PRELOAD allows an initial data pattern to be placed at the latched parallel outputs of the boundary scan register cells prior to the selection of another boundary scan test operation.

The shifting of data for the SAMPLE and PRELOAD phases can occur concurrently when required—that is, while data captured is shifted out, the preloaded data can be shifted in.

BYPASS

When the BYPASS instruction is loaded in the instruction register and the TAP is placed in a Shift-DR state, the bypass register is placed between the TDI and TDO balls. The advantage of the BYPASS instruction is that it shortens the boundary scan path when multiple devices are connected together on a board.

Reserved

These instructions are not implemented but are reserved for future use. Do not use these instructions.

TAP Timing

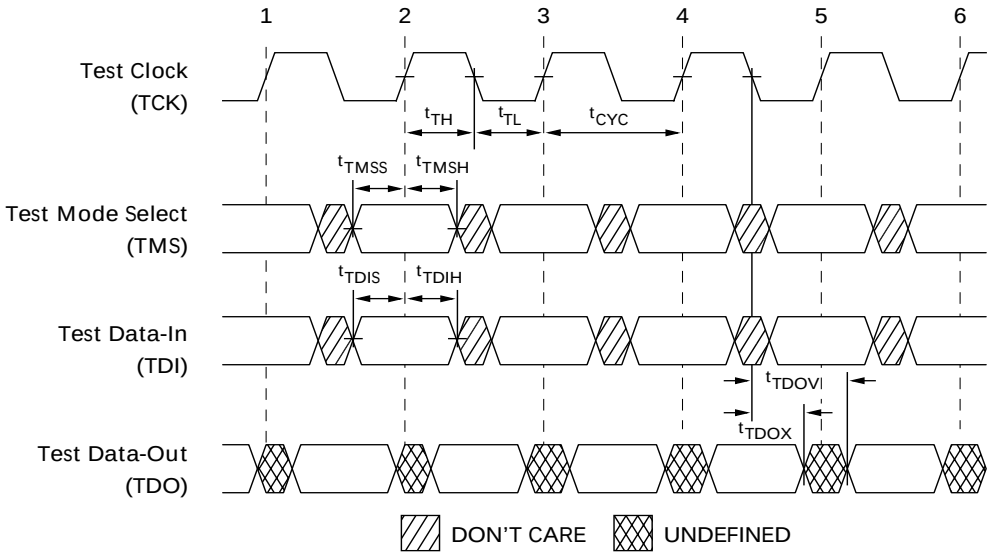

TAP AC Switching Characteristics Over the Operating Range[9, 10]

Parameter	Description	Min.	Max.	Unit
Clock				
t_{TCYC}	TCK Clock Cycle Time	50		ns
t_{TF}	TCK Clock Frequency		20	MHz
t_{TH}	TCK Clock HIGH time	25		ns
t_{TL}	TCK Clock LOW time	25		ns
Output Times				
t_{TDOV}	TCK Clock LOW to TDO Valid		5	ns
t_{TDOX}	TCK Clock LOW to TDO Invalid	0		ns
Set-up Times				
t_{TMSS}	TMS Set-up to TCK Clock Rise	5		ns
t_{TDIS}	TDI Set-up to TCK Clock Rise	5		ns
t_{CS}	Capture Set-up to TCK Rise	5		
Hold Times				
t_{TMSH}	TMS hold after TCK Clock Rise	5		ns
t_{TDIH}	TDI Hold after Clock Rise	5		ns
t_{CH}	Capture Hold after Clock Rise	5		ns

Notes:
9. t_{CS} and t_{CH} refer to the set-up and hold time requirements of latching data from the boundary scan register.
10. Test conditions are specified using the load in TAP AC test Conditions. t_R/t_F = 1 ns.

3.3V TAP AC Test Conditions

Input pulse levels ..... V_{SS} to 3.3V
Input rise and fall times ..... 1 ns
Input timing reference levels 1.5V
Output reference levels 1.5V
Test load termination supply voltage 1.5V

2.5V TAP AC Test Conditions

Input pulse levels ..... V_{SS} to 2.5V
Input rise and fall time .....1 ns
Input timing reference levels..... 1.25V
Output reference levels 1.25V
Test load termination supply voltage 1.25V

3.3V TAP AC Output Load Equivalent

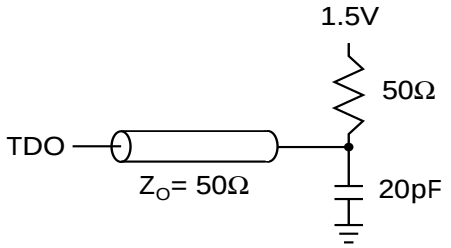

2.5V TAP AC Output Load Equivalent

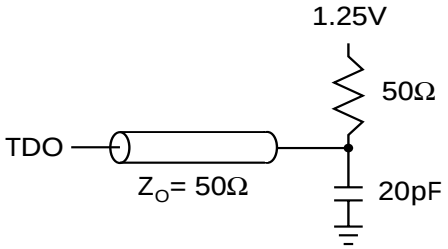

TAP DC Electrical Characteristics And Operating Conditions

(0°C < TA < +70°C; V_{DD} = 3.3V ±0.165V unless otherwise noted)[11]

Parameter	Description	Test Conditions		Min.	Max.	Unit
V_{OH1}	Output HIGH Voltage	I_{OH} = –4.0 mA, V_{DDQ} = 3.3V		2.4		V
		I_{OH} = –1.0 mA, V_{DDQ} = 2.5V		2.0		V
V_{OH2}	Output HIGH Voltage	I_{OH} = –100 µA	V_{DDQ} = 3.3V	2.9		V
			V_{DDQ} = 2.5V	2.1		V
V_{OL1}	Output LOW Voltage	I_{OL} = 8.0 mA, V_{DDQ} = 3.3V			0.4	V
		I_{OL} = 8.0 mA, V_{DDQ} = 2.5V			0.4	V
V_{OL2}	Output LOW Voltage	I_{OL} = 100 µA	V_{DDQ} = 3.3V		0.2	V
			V_{DDQ} = 2.5V		0.2	V
V_{IH}	Input HIGH Voltage	V_{DDQ} = 3.3V		2.0	V_{DD} + 0.3	V
		V_{DDQ} = 2.5V		1.7	V_{DD} + 0.3	V
V_{IL}	Input LOW Voltage	V_{DDQ} = 3.3V		–0.5	0.7	V
		V_{DDQ} = 2.5V		–0.3	0.7	V
I_X	Input Load Current	GND ≤ V_{IN} ≤ V_{DDQ}		–5	5	µA

Note:
11.All voltages referenced to V_{SS} (GND).

Identification Register Definitions

Instruction Field	CY7C1370D	CY7C1372D	Description
Revision Number (31:29)	000	000	Reserved for version number.
Cypress Device ID (28:12)[12]	01011001000100101	01011001000010101	Reserved for future use.
Cypress JEDEC ID (11:1)	00000110100	00000110100	Allows unique identification of SRAM vendor.
ID Register Presence (0)	1	1	Indicate the presence of an ID register.

Scan Register Sizes

Register Name	Bit Size (x18)	Bit Size (x36)
Instruction	3	3
Bypass	1	1
ID	32	32
Boundary Scan Order (119-ball BGA package)	85	85
Boundary Scan Order (165-ball fBGA package)	89	89

Identification Codes

Instruction	Code	Description
EXTEST	000	Captures I/O ring contents. Places the boundary scan register between TDI and TDO. Forces all SRAM outputs to High-Z state.
IDCODE	001	Loads the ID register with the vendor ID code and places the register between TDI and TDO. This operation does not affect SRAM operations.
SAMPLE Z	010	Captures I/O ring contents. Places the boundary scan register between TDI and TDO. Forces all SRAM output drivers to a High-Z state.
RESERVED	011	Do Not Use: This instruction is reserved for future use.
SAMPLE/PRELOAD	100	Captures I/O ring contents. Places the boundary scan register between TDI and TDO. Does not affect SRAM operation.
RESERVED	101	Do Not Use: This instruction is reserved for future use.
RESERVED	110	Do Not Use: This instruction is reserved for future use.
BYPASS	111	Places the bypass register between TDI and TDO. This operation does not affect SRAM operations.

Note:
12. Bit #24 is “1” in the Register Definitions for both 2.5v and 3.3v versions of this device.

119-ball BGA Boundary Scan[13, 14]

CY7C1370D (1M x 36)			
Bit#	**Ball ID**	**Bit#**	**Ball ID**
1	H4	37	B6
2	T4	38	D4
3	T5	39	B4
4	T6	40	F4
5	R5	41	M4
6	L5	42	A5
7	R6	43	K4
8	U6	44	E4
9	R7	45	G4
10	T7	46	A4
11	P6	47	G3
12	N7	48	C3
13	M6	49	B2
14	L7	50	B3
15	K6	51	A3
16	P7	52	C2
17	N6	53	A2
18	L6	54	B1
19	K7	55	C1
20	J5	56	D2
21	H6	57	E1
22	G7	58	F2
23	F6	59	G1
24	E7	60	H2
25	D7	61	D1
26	H7	62	E2
27	G6	63	G2
28	E6	64	H1
29	D6	65	J3
30	C7	66	2K
31	B7	67	L1
32	C6	68	M2
33	A6	69	N1
34	C5	70	P1
35	B5	71	K1
36	G5	72	L2

CY7C1370D (1M x 36)	
Bit#	**Ball ID**
73	N2
74	P2
75	R3
76	T1
77	R1
78	T2
79	L3
80	R2
81	T3
82	L4
83	N4
84	P4
85	Internal

Notes:
13. Balls which are NC (No Connect) are pre-set LOW
14. Bit# 85 is pre-set HIGH

119-ball BGA Boundary Scan Order[13, 14]

CY7C1372D (2M x 18)			
Bit #	Ball ID	Bit #	Ball ID
1	H4	37	B6
2	T4	38	D4
3	T5	39	B4
4	T6	40	F4
5	R5	41	M4
6	L5	42	A5
7	R6	43	K4
8	U6	44	E4
9	R7	45	G4
10	T7	46	A4
11	P6	47	G3
12	N7	48	C3
13	M6	49	B2
14	L7	50	B3
15	K6	51	A3
16	P7	52	C2
17	N6	53	A2
18	L6	54	B1
19	K7	55	C1
20	J5	56	D2
21	H6	57	E1
22	G7	58	F2
23	F6	59	G1
24	E7	60	H2
25	D7	61	D1
26	H7	62	E2
27	G6	63	G2
28	E6	64	H1
29	D6	65	J3
30	C7	66	2K
31	B7	67	L1
32	C6	68	M2
33	A6	69	N1
34	C5	70	P1
35	B5	71	K1
36	G5	72	L2

CY7C1372D (2M x 18)	
Bit #	Ball ID
73	N2
74	P2
75	R3
76	T1
77	R1
78	T2
79	L3
80	R2
81	T3
82	L4
83	N4
84	P4
85	Internal

165-Ball fBGA Boundary Scan Order[13, 15]

CY7C1370D (1M x 36)			
Bit #	Ball ID	Bit #	Ball ID
1	N6	37	A9
2	N7	38	B9
3	10N	39	C10
4	P11	40	A8
5	P8	41	B8
6	R8	42	A7
7	R9	43	B7
8	P9	44	B6
9	P10	45	A6
10	R10	46	B5
11	R11	47	A5
12	H11	48	A4
13	N11	49	B4
14	M11	50	B3
15	L11	51	A3
16	K11	52	A2
17	J11	53	B2
18	M10	54	C2
19	L10	55	B1
20	K10	56	A1
21	J10	57	C1
22	H9	58	D1
23	H10	59	E1
24	G11	60	F1
25	F11	61	G1
26	E11	62	D2
27	D11	63	E2
28	G10	64	F2
29	F10	65	G2
30	E10	66	H1
31	D10	67	H3
32	C11	68	J1
33	A11	69	K1
34	B11	70	L1
35	A10	71	M1
36	B10	72	J2

CY7C1370D (1M x 36)	
Bit #	Ball ID
73	K2
74	L2
75	M2
76	N1
77	N2
78	P1
79	R1
80	R2
81	P3
82	R3
83	P2
84	R4
85	P4
86	N5
87	P6
88	R6
89	Internal

Note:
15. Bit# 89 is Pre-Set HIGH

165-Ball fBGA Boundary Scan Order[13, 15]

CY7C1372D (2M x 18)			
Bit #	**Ball ID**	**Bit #**	**Ball ID**
1	N6	37	A9
2	N7	38	B9
3	10N	39	C10
4	P11	40	A8
5	P8	41	B8
6	R8	42	A7
7	R9	43	B7
8	P9	44	B6
9	P10	45	A6
10	R10	46	B5
11	R11	47	A5
12	H11	48	A4
13	N11	49	B4
14	M11	50	B3
15	L11	51	A3
16	K11	52	A2
17	J11	53	B2
18	M10	54	C2
19	L10	55	B1
20	K10	56	A1
21	J10	57	C1
22	H9	58	D1
23	H10	59	E1
24	G11	60	F1
25	F11	61	G1
26	E11	62	D2
27	D11	63	E2
28	G10	64	F2
29	F10	65	G2
30	E10	66	H1
31	D10	67	H3
32	C11	68	J1
33	A11	69	K1
34	B11	70	L1
35	A10	71	M1
36	B10	72	J2

CY7C1372D (2M x 18)	
Bit #	**Ball ID**
73	K2
74	L2
75	M2
76	N1
77	N2
78	P1
79	R1
80	R2
81	P3
82	R3
83	P2
84	R4
85	P4
86	N5
87	P6
88	R6
89	Internal

Maximum Ratings

(Above which the useful life may be impaired. For user guidelines, not tested.)

Storage Temperature .....–65°C to +150°C

Ambient Temperature with Power Applied.....–55°C to +125°C

Supply Voltage on V_{DD} Relative to GND..... –0.5V to +4.6V

DC to Outputs in Tri-State ..... –0.5V to V_{DDQ} + 0.5V

DC Input Voltage.....–0.5V to V_{DD} + 0.5V

Current into Outputs (LOW)..... 20 mA

Static Discharge Voltage..... > 2001V (per MIL-STD-883, Method 3015)

Latch-up Current..... > 200 mA

Operating Range

Range	Ambient Temperature	V_{DD}	V_{DDQ}
Commercial	0°C to +70°C	3.3V–5%/+10%	2.5V –5% to V_{DD}
Industrial	–40°C to +85°C		

Electrical Characteristics Over the Operating Range [16, 17]

Parameter	Description	Test Conditions		Min.	Max.	Unit
V_{DD}	Power Supply Voltage			3.135	3.6	V
V_{DDQ}	I/O Supply Voltage	V_{DDQ} = 3.3V		3.135	V_{DD}	V
		V_{DDQ} = 2.5V		2.375	2.625	V
V_{OH}	Output HIGH Voltage	V_{DDQ} = 3.3V, V_{DD} = Min., I_{OH} = –4.0 mA		2.4		V
		V_{DDQ} = 2.5V, V_{DD} = Min., I_{OH} = –1.0 mA		2.0		V
V_{OL}	Output LOW Voltage	V_{DDQ} = 3.3V, V_{DD} = Min., I_{OL} = 8.0 mA			0.4	V
		V_{DDQ} = 2.5V, V_{DD} = Min., I_{OL} = 1.0 mA			0.4	V
V_{IH}	Input HIGH Voltage[16]	V_{DDQ} = 3.3V		2.0	V_{DD} + 0.3V	V
		V_{DDQ} = 2.5V		1.7	V_{DD} + 0.3V	V
V_{IL}	Input LOW Voltage[16]	V_{DDQ} = 3.3V		–0.3	0.8	V
		V_{DDQ} = 2.5V		–0.3	0.7	V
I_X	Input Load Current except ZZ and MODE	GND ≤ V_I ≤ V_{DDQ}		–5	5	µA
	Input Current of MODE	Input = V_{SS}		–5		µA
		Input = V_{DD}			30	µA
	Input Current of ZZ	Input = V_{SS}		–30		µA
		Input = V_{DD}			5	µA
I_{OZ}	Output Leakage Current	GND ≤ V_I ≤ V_{DDQ}, Output Disabled		–5	5	µA
I_{DD}	V_{DD} Operating Supply	V_{DD} = Max., I_{OUT} = 0 mA, f = f_{MAX} = $1/t_{CYC}$	4.0-ns cycle, 250 MHz		350	mA
			4.4-ns cycle, 225 MHz		325	mA
			5.0-ns cycle, 200 MHz		300	mA
			6.0-ns cycle, 167 MHz		275	mA
I_{SB1}	Automatic CE Power-down Current—TTL Inputs	Max. V_{DD}, Device Deselected, V_{IN} ≥ V_{IH} or V_{IN} ≤ V_{IL}, f = f_{MAX} = $1/t_{CYC}$	4.0-ns cycle, 250 MHz		160	mA
			4.4-ns cycle, 225 MHz		TBD	mA
			5.0-ns cycle, 200 MHz		150	mA
			6.0-ns cycle, 167 MHz		140	mA
I_{SB2}	Automatic CE Power-down Current—CMOS Inputs	Max. V_{DD}, Device Deselected, V_{IN} ≤ 0.3V or V_{IN} ≥ V_{DDQ} – 0.3V, f = 0	All speed grades		70	mA
I_{SB3}	Automatic CE Power-down Current—CMOS Inputs	Max. V_{DD}, Device Deselected, V_{IN} ≤ 0.3V or V_{IN} ≥ V_{DDQ} – 0.3V, f = f_{MAX} = $1/t_{CYC}$	4.0-ns cycle, 250 MHz		135	mA
			4.4-ns cycle, 225 MHz		TBD	mA
			5.0-ns cycle, 200 MHz		130	mA
			6.0-ns cycle, 167 MHz		125	mA

Shaded areas contain advance information.

Notes:

16. Overshoot: V_{IH}(AC) < V_{DD} +1.5V (Pulse width less than t_{CYC}/2), undershoot: V_{IL}(AC)> –2V (Pulse width less than t_{CYC}/2).
17. $T_{Power\text{-}up}$: Assumes a linear ramp from 0V to V_{DD} (min.) within 200 ms. During this time V_{IH} < V_{DD} and V_{DDQ} < V_{DD}.

Electrical Characteristics Over the Operating Range (continued)[16, 17]

Parameter	Description	Test Conditions		Min.	Max.	Unit
I_{SB4}	Automatic CE Power-down Current—TTL Inputs	Max. V_{DD}, Device Deselected, $V_{IN} \geq V_{IH}$ or $V_{IN} \leq V_{IL}$, f = 0	All speed grades		80	mA

Capacitance[18]

Parameter	Description	Test Conditions	TQFP Package	BGA Package	fBGA Package	Unit
C_{IN}	Input Capacitance	T_A = 25°C, f = 1 MHz, V_{DD} = 3.3V. V_{DDQ} = 2.5V	5	8	9	pF
C_{CLK}	Clock Input Capacitance		5	8	9	pF
$C_{I/O}$	Input/Output Capacitance		5	8	9	pF

Thermal Resistance[18]

Parameter	Description	Test Conditions	TQFP Package	BGA Package	fBGA Package	Unit
Θ_{JA}	Thermal Resistance (Junction to Ambient)	Test conditions follow standard test methods and procedures for measuring thermal impedance, per EIA / JESD51.	31	45	46	°C/W
Θ_{JC}	Thermal Resistance (Junction to Case)		6	7	3	°C/W

AC Test Loads and Waveforms

3.3V I/O Test Load

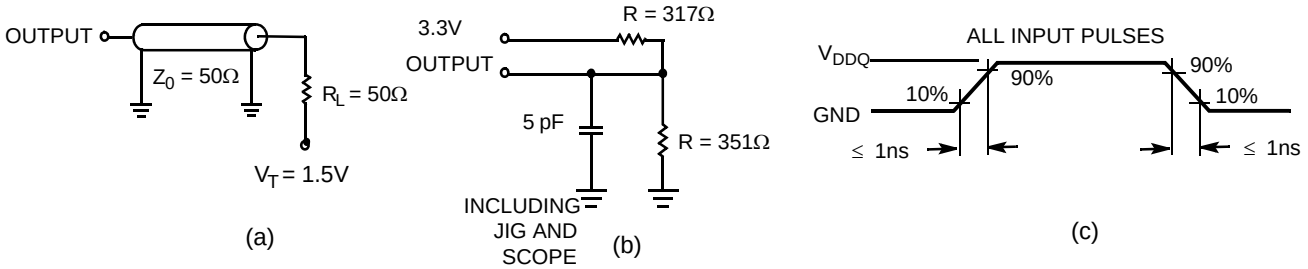

2.5V I/O Test Load

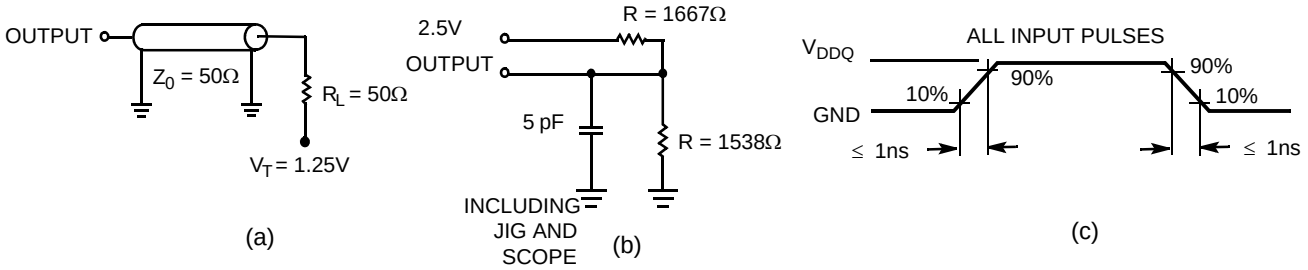

Note:
18. Tested initially and after any design or process change that may affect these parameters.

Switching Characteristics Over the Operating Range [23, 24]

Parameter	Description	-250		-225		-200		-167		Unit
		Min.	Max.	Min.	Max.	Min.	Max.	Min.	Max.	
t_{Power}[19]	V_{CC} (typical) to the first access read or write	1		1		1		1		ms
Clock										
t_{CYC}	Clock Cycle Time	4.0		4.4		5		6		ns
F_{MAX}	Maximum Operating Frequency		250		225		200		167	MHz
t_{CH}	Clock HIGH	1.7		2.0		2.0		2.2		ns
t_{CL}	Clock LOW	1.7		2.0		2.0		2.2		ns
Output Times										
t_{CO}	Data Output Valid After CLK Rise		2.6		2.8		3.0		3.4	ns
t_{EOV}	$\overline{OE}$ LOW to Output Valid		2.6		2.8		3.0		3.4	ns
t_{DOH}	Data Output Hold After CLK Rise	1.0		1.0		1.3		1.3		ns
t_{CHZ}	Clock to High-Z[20, 21, 22]		2.6		2.8		3.0		3.4	ns
t_{CLZ}	Clock to Low-Z[20, 21, 22]	1.0		1.0		1.3		1.3		ns
t_{EOHZ}	$\overline{OE}$ HIGH to Output High-Z[20, 21, 22]		2.6		2.8		3.0		3.4	ns
t_{EOLZ}	$\overline{OE}$ LOW to Output Low-Z[20, 21, 22]	0		0		0		0		ns
Set-up Times										
t_{AS}	Address Set-up Before CLK Rise	1.2		1.4		1.4		1.5		ns
t_{DS}	Data Input Set-up Before CLK Rise	1.2		1.4		1.4		1.5		ns
t_{CENS}	$\overline{CEN}$ Set-up Before CLK Rise	1.2		1.4		1.4		1.5		ns
t_{WES}	$\overline{WE}$, $\overline{BW}_X$ Set-up Before CLK Rise	1.2		1.4		1.4		1.5		ns
t_{ALS}	ADV/$\overline{LD}$ Set-up Before CLK Rise	1.2		1.4		1.4		1.5		ns
t_{CES}	Chip Select Set-up	1.2		1.4		1.4		1.5		ns
Hold Times										
t_{AH}	Address Hold After CLK Rise	0.3		0.4		0.4		0.5		ns
t_{DH}	Data Input Hold After CLK Rise	0.3		0.4		0.4		0.5		ns
t_{CENH}	$\overline{CEN}$ Hold After CLK Rise	0.3		0.4		0.4		0.5		ns
t_{WEH}	$\overline{WE}$, $\overline{BW}_X$ Hold After CLK Rise	0.3		0.4		0.4		0.5		ns
t_{ALH}	ADV/$\overline{LD}$ Hold after CLK Rise	0.3		0.4		0.4		0.5		ns
t_{CEH}	Chip Select Hold After CLK Rise	0.3		0.4		0.4		0.5		ns

Shaded areas contain advance information.

Notes:

19. This part has a voltage regulator internally; t_{Power} is the time power needs to be supplied above V_{DD} minimum initially, before a Read or Write operation can be initiated.
20. t_{CHZ}, t_{CLZ}, t_{EOLZ}, and t_{EOHZ} are specified with AC test conditions shown in (b) of AC Test Loads. Transition is measured ± 200 mV from steady-state voltage.
21. At any given voltage and temperature, t_{EOHZ} is less than t_{EOLZ} and t_{CHZ} is less than t_{CLZ} to eliminate bus contention between SRAMs when sharing the same data bus. These specifications do not imply a bus contention condition, but reflect parameters guaranteed over worst case user conditions. Device is designed to achieve High-Z prior to Low-Z under the same system conditions.
22. This parameter is sampled and not 100% tested.
23. Timing reference is 1.5V when V_{DDQ} = 3.3V and is 1.25V when V_{DDQ} = 2.5V.
24. Test conditions shown in (a) of AC Test Loads unless otherwise noted.

Switching Waveforms

Read/Write/Timing[25, 26, 27]

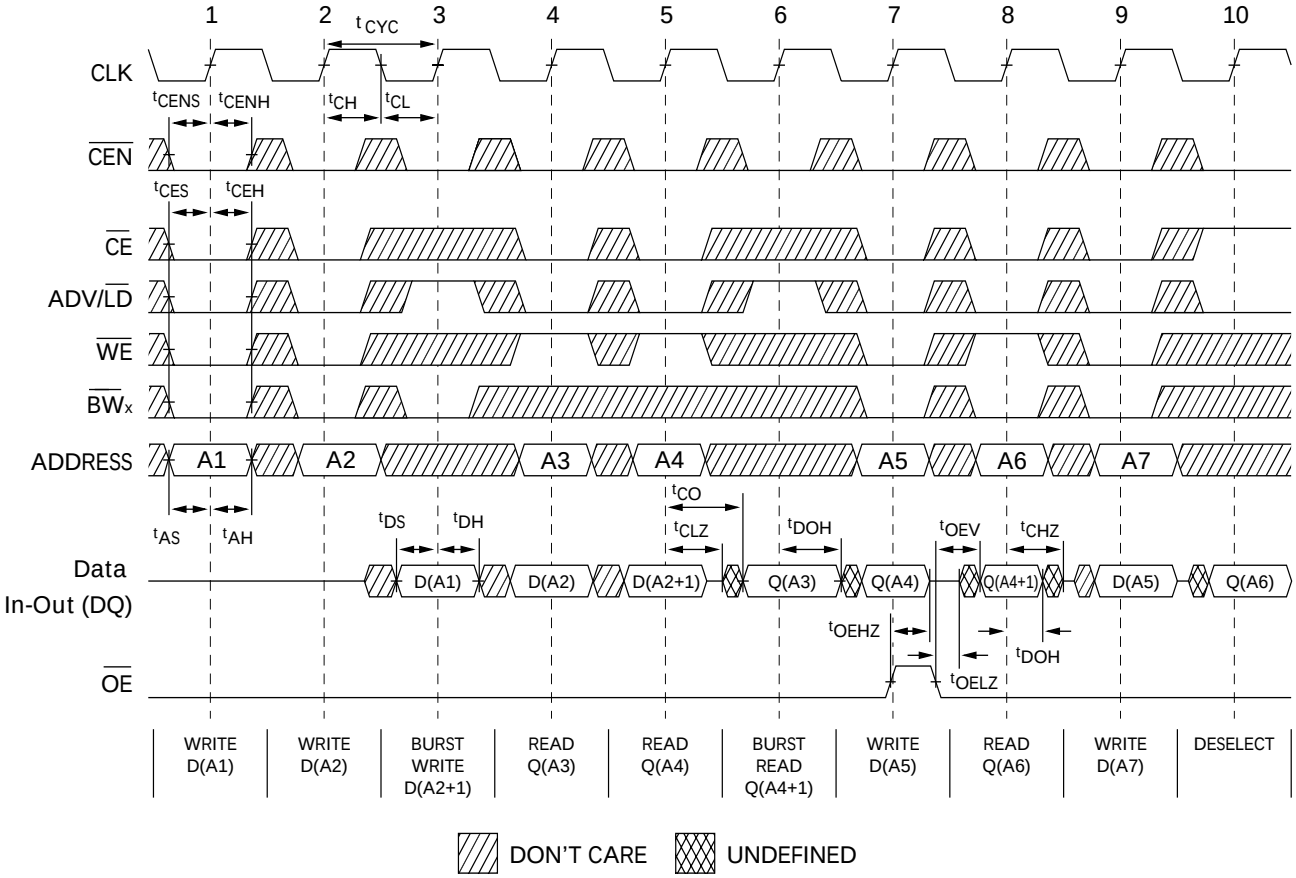

Notes:
25. For this waveform ZZ is tied LOW.
26. When $\overline{CE}$ is LOW, $\overline{CE}_1$ is LOW, CE_2 is HIGH and $\overline{CE}_3$ is LOW. When $\overline{CE}$ is HIGH,$\overline{CE}_1$ is HIGH or CE_2 is LOW or $\overline{CE}_3$ is HIGH.
27. Order of the Burst sequence is determined by the status of the MODE (0 = Linear, 1 = Interleaved).Burst operations are optional.

Switching Waveforms (continued)

NOP,STALL and DESELECT Cycles[25, 26, 28]

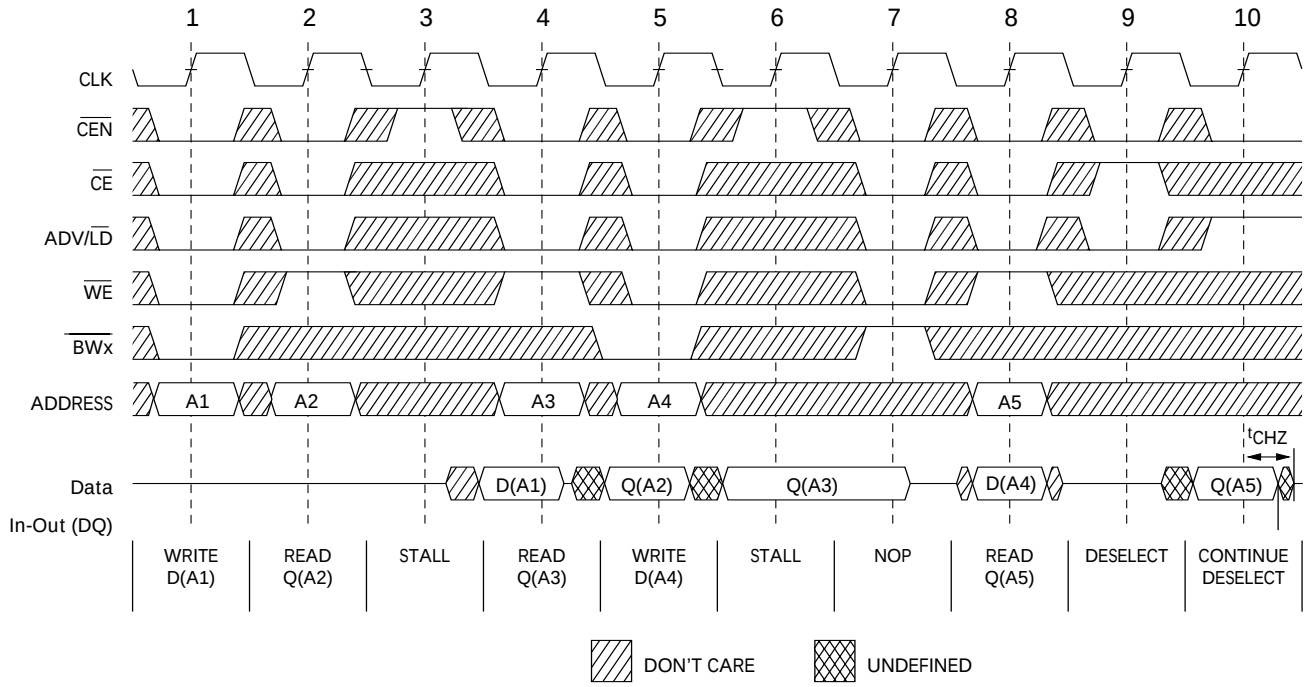

ZZ Mode Timing[29, 30]

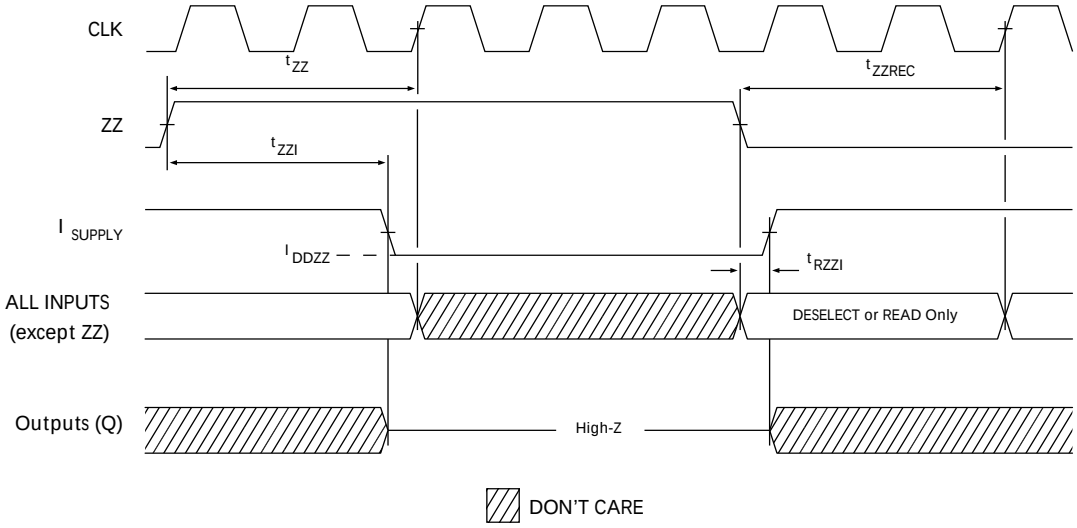

Notes:
28. The Ignore Clock Edge or Stall cycle (Clock 3) illustrated $\overline{CEN}$ being used to create a pause. A write is not performed during this cycle
29. Device must be deselected when entering ZZ mode. See cycle description table for all possible signal conditions to deselect the device.
30. I/Os are in High-Z when exiting ZZ sleep mode.

Ordering Information

Speed (MHz)	Ordering Code	Package Name	Package Type	Operating Range
250	CY7C1370D-250AXC	A100RA	Lead-Free 100-lead Thin Quad Flat Pack (14 x 20 x 1.4 mm)	Commercial
	CY7C1372D-250AXC			
	CY7C1370D-250BGC	BG119	119-ball Ball Grid Array (14 x 22 x 2.4 mm)	
	CY7C1372D-250BGC			
	CY7C1370D-250BZC	BB165D	165-ball Fine Pitch Ball Grid Array (13 x 15 x 1.4 mm)	
	CY7C1372D-250BZC			
225	CY7C1370D-225AXC	A100RA	Lead-Free 100-lead Thin Quad Flat Pack (14 x 20 x 1.4 mm)	
	CY7C1372D-225AXC			
	CY7C1370D-225BGC	BG119	119-ball Ball Grid Array (14 x 22 x 2.4 mm)	
	CY7C1372D-225BGC			
	CY7C1370D-225BZC	BB165D	165-ball Fine Pitch Ball Grid Array (13 x 15 x 1.4 mm)	
	CY7C1372D-225BZC			
200	CY7C1370D-200AXC	A100RA	Lead-Free 100-lead Thin Quad Flat Pack (14 x 20 x 1.4 mm)	
	CY7C1372D-200AXC			
	CY7C1370D-200BGC	BG119	119-ball Ball Grid Array (14 x 22 x 2.4 mm)	
	CY7C1372D-200BGC			
	CY7C1370D-200BZC	BB165D	165-ball Fine Pitch Ball Grid Array (13 x 15 x 1.4 mm)	
	CY7C1372D-200BZC			
167	CY7C1370D-167AXC	A100RA	Lead-Free 100-lead Thin Quad Flat Pack (14 x 20 x 1.4 mm)	
	CY7C1372D-167AXC			
	CY7C1370D-167BGC	BG119	119-ball Ball Grid Array (14 x 22 x 2.4 mm)	
	CY7C1372D-167BGC			
	CY7C1370D-167BZC	BB165D	165-ball Fine Pitch Ball Grid Array (13 x 15 x 1.4 mm)	
	CY7C1372D-167BZC			

Ordering Information (continued)

Speed (MHz)	Ordering Code	Package Name	Package Type	Operating Range
250	CY7C1370D-250AXI	A100RA	Lead-Free 100-lead Thin Quad Flat Pack (14 x 20 x 1.4 mm)	Industrial
	CY7C1372D-250AXI			
	CY7C1370D-250BGI	BG119	119-ball Ball Grid Array (14 x 22 x 2.4 mm)	
	CY7C1372D-250BGI			
	CY7C1370D-250BZI	BB165D	165-ball Fine Pitch Ball Grid Array (13 x 15 x 1.4 mm)	
	CY7C1372D-250BZI			
225	CY7C1370D-225AXI	A100RA	Lead-Free 100-lead Thin Quad Flat Pack (14 x 20 x 1.4 mm)	
	CY7C1372D-225AXI			
	CY7C1370D-225BGI	BG119	119-ball Ball Grid Array (14 x 22 x 2.4 mm)	
	CY7C1372D-225BGI			
	CY7C1370D-225BZI	BB165D	165-ball Fine Pitch Ball Grid Array (13 x 15 x 1.4 mm)	
	CY7C1372D-225BZI			
200	CY7C1370D-200AXI	A100RA	Lead-Free 100-lead Thin Quad Flat Pack (14 x 20 x 1.4 mm)	
	CY7C1372D-200AXI			
	CY7C1370D-200BGI	BG119	119-ball Ball Grid Array (14 x 22 x 2.4 mm)	
	CY7C1372D-200BGI			
	CY7C1370D-200BZI	BB165D	165-ball Fine Pitch Ball Grid Array (13 x 15 x 1.4 mm)	
	CY7C1372D-200BZI			
167	CY7C1370D-167AXI	A100RA	Lead-Free 100-lead Thin Quad Flat Pack (14 x 20 x 1.4 mm)	
	CY7C1372D-167AXI			
	CY7C1370D-167BGI	BG119	119-ball Ball Grid Array (14 x 22 x 2.4 mm)	
	CY7C1372D-167BGI			
	CY7C1370D-167BZI	BB165D	165-ball Fine Pitch Ball Grid Array (13 x 15 x 1.4 mm)	
	CY7C1372D-167BZI			

Shaded areas contain advance information. Please contact your local Cypress sales representative for availability of these parts. Lead-free BG and BZ packages (Ordering Code: BGX, BZX) will be available in 2005.

Package Diagrams

100-Pin Thin Plastic Quad Flatpack (14 x 20 x 1.4 mm) A101

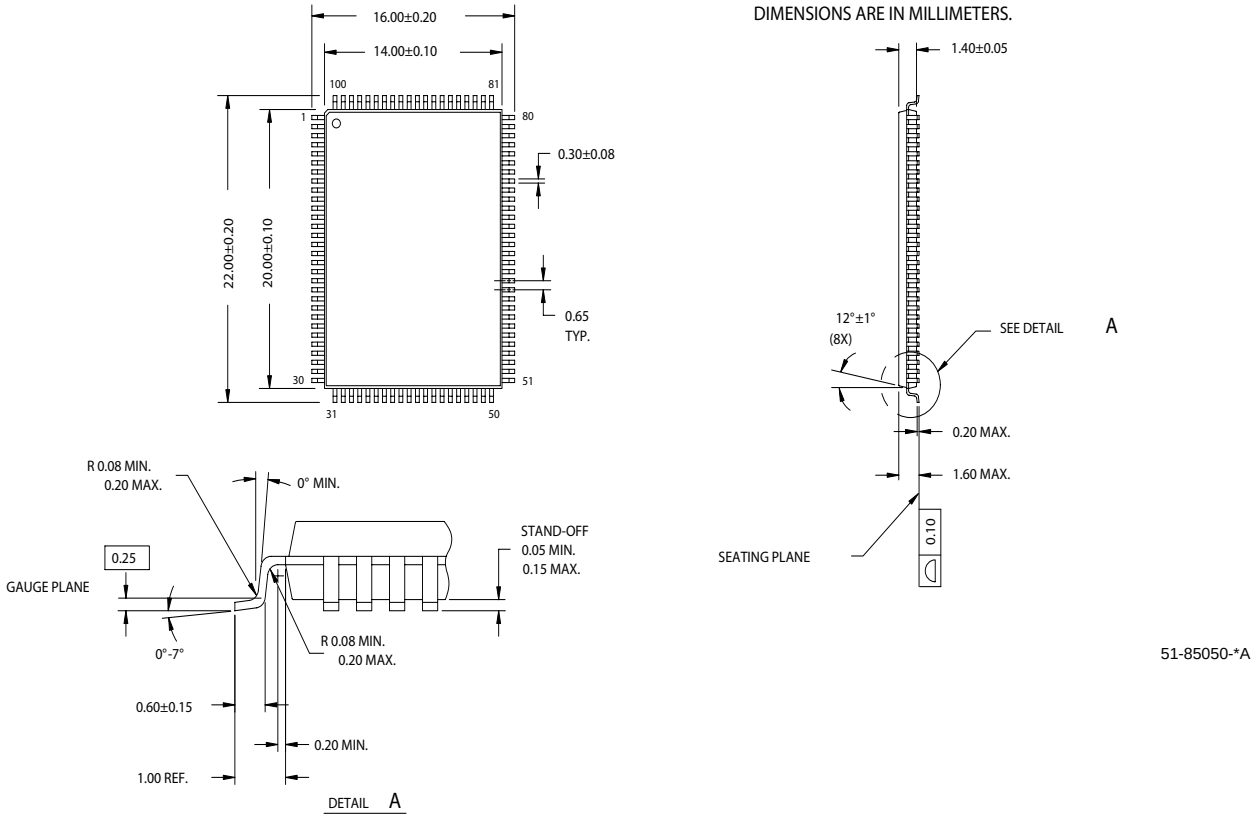

Package Diagrams (continued)

119-Lead PBGA (14 x 22 x 2.4 mm) BG119

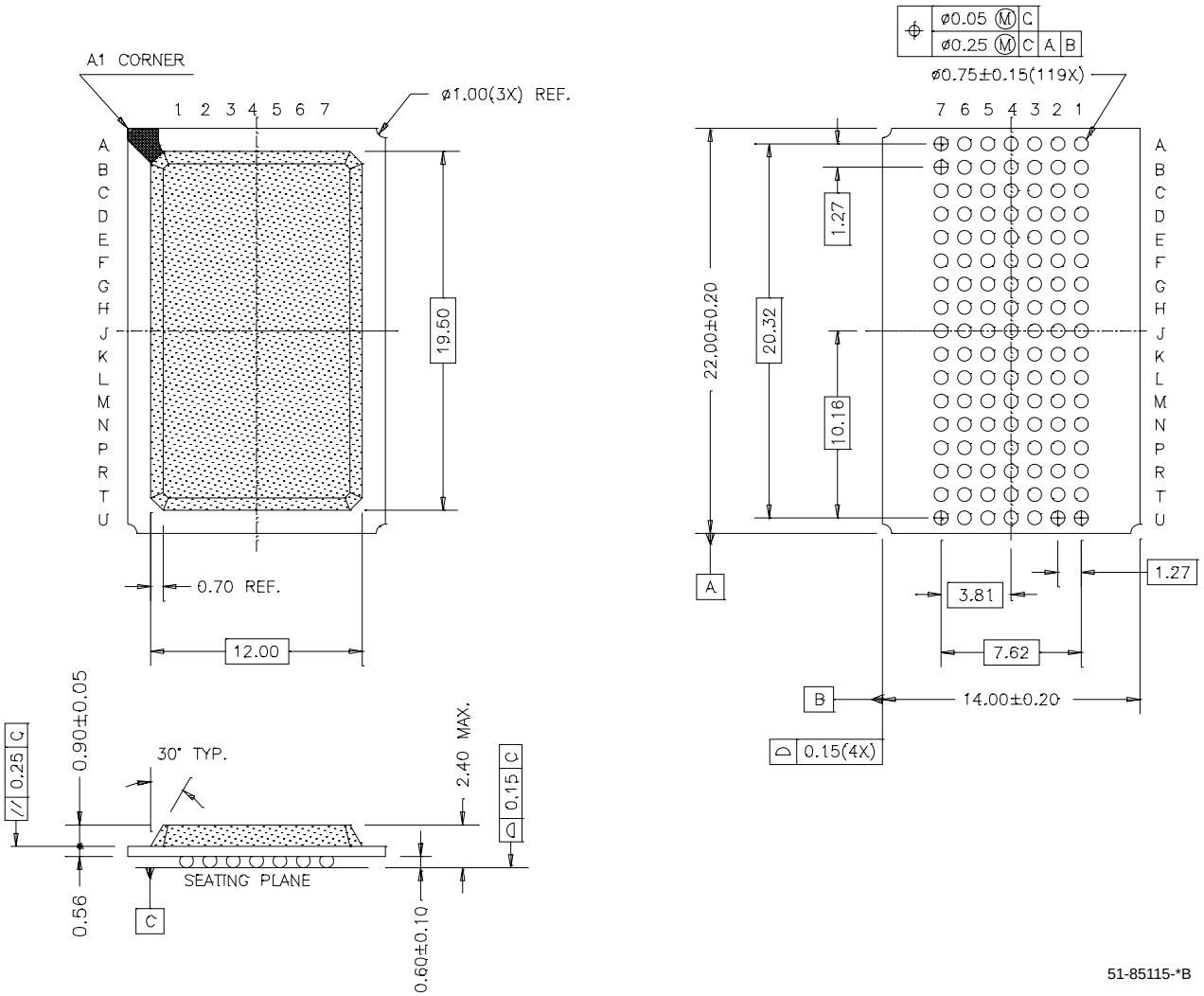

Package Diagrams (continued)

165 FBGA 13 x 15 x 1.40 MM BB165D

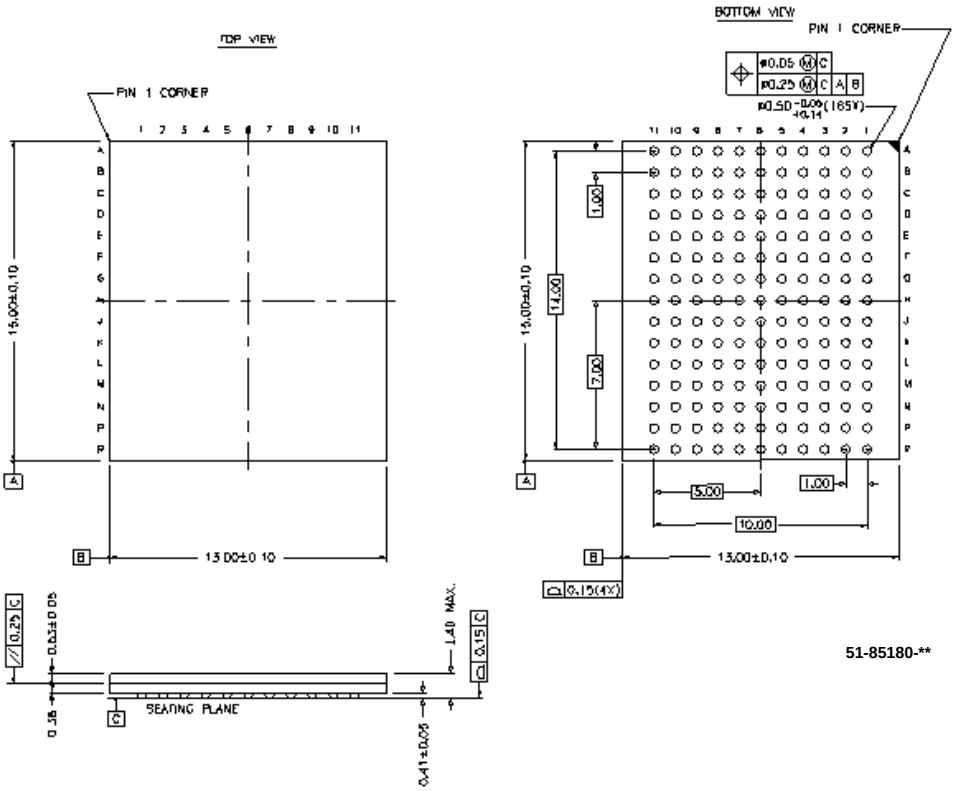

ZBT is a trademark of Integrated Device Technology. NoBL and No Bus Latency are trademarks of Cypress Semiconductor Corporation. All products and company names mentioned in this document may be the trademarks of their respective holders.

© Cypress Semiconductor Corporation, 2004. The information contained herein is subject to change without notice. Cypress Semiconductor Corporation assumes no responsibility for the use of any circuitry other than circuitry embodied in a Cypress product. Nor does it convey or imply any license under patent or other rights. Cypress products are not warranted nor intended to be used for medical, life support, life saving, critical control or safety applications, unless pursuant to an express written agreement with Cypress. Furthermore, Cypress does not authorize its products for use as critical components in life-support systems where a malfunction or failure may reasonably be expected to result in significant injury to the user. The inclusion of Cypress products in life-support systems application implies that the manufacturer assumes all risk of such use and in doing so indemnifies Cypress against all charges.

Document History Page

Document Title: CY7C1370D/CY7C1372D 18-Mbit (512K x 36/1M x 18) Pipelined SRAM with NoBL™ Architecture Document Number: 38-05555				
REV.	**ECN No.**	**Issue Date**	**Orig. of Change**	**Description of Change**
**	254509	See ECN	RKF	New data sheet
*A	276690	See ECN	VBL	Changed TQFP pkg to Lead-free TQFP in Ordering Information section Added comment of Lead-free BG and BZ packages availability

WWW.ALLDATASHEET.COM

Copyright © Each Manufacturing Company.

All Datasheets cannot be modified without permission.

This datasheet has been download from :

www.AllDataSheet.com

100% Free DataSheet Search Site.

Free Download.

No Register.

Fast Search System.

www.AllDataSheet.com