DATE	REV	ECN	APP'D. BY
1-19-06	A1	–	JM
4-11-06	A2	7581	TRM

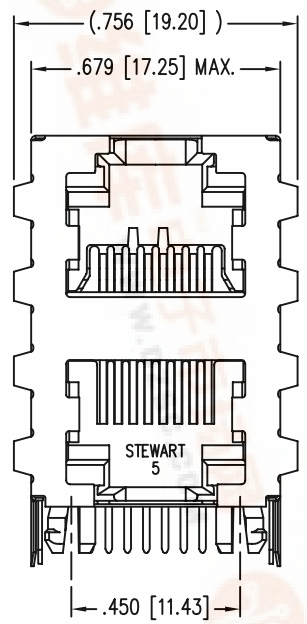

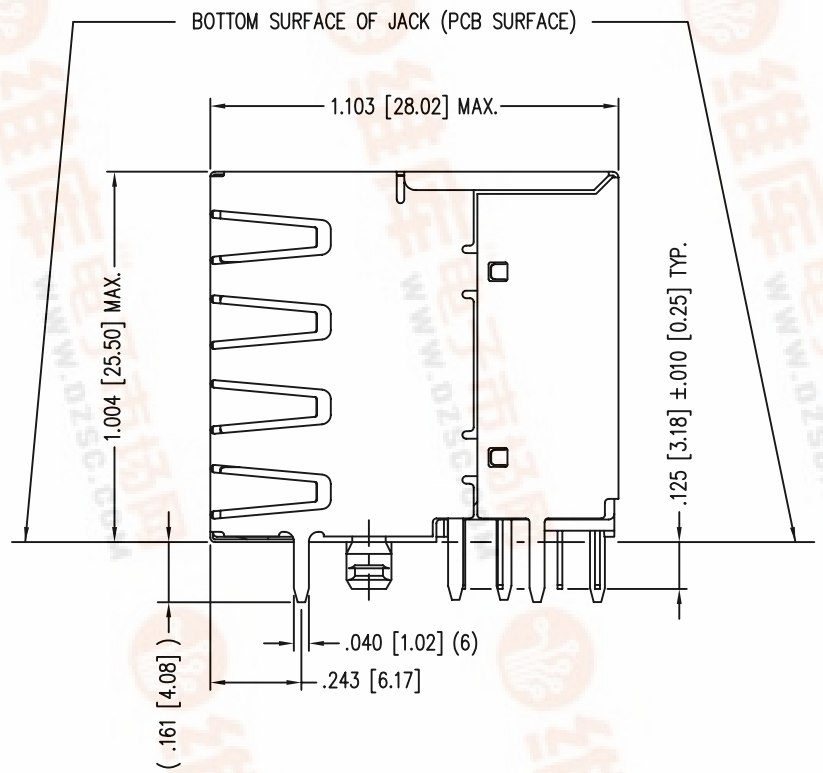

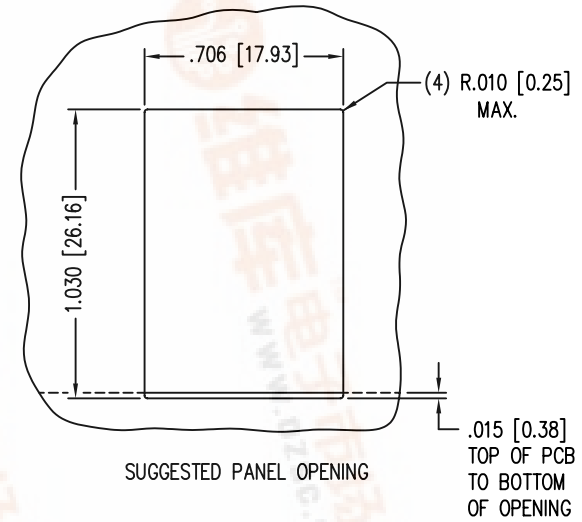

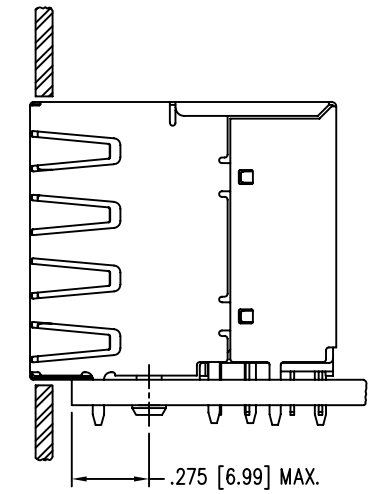

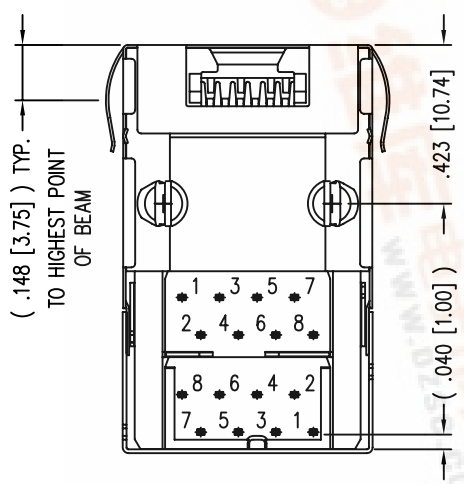

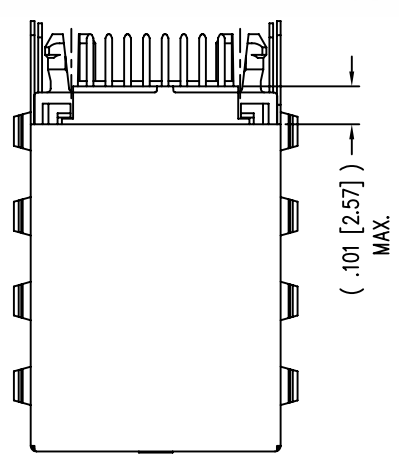

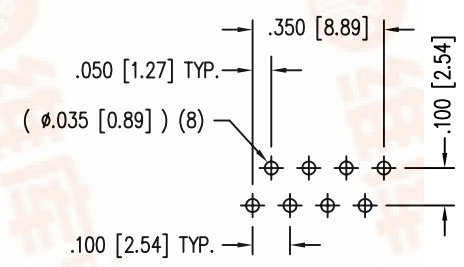

DETAIL "A"
TYPICAL HOLE LAYOUT

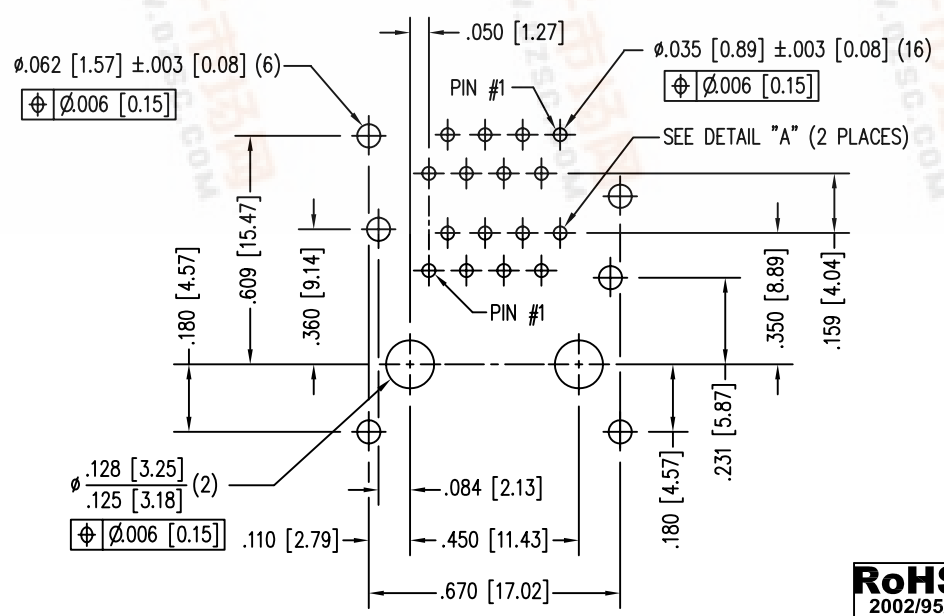

P.C.B. RECOMMENDED HOLE LAYOUT
SEEN FROM COMPONENT SIDE

ALL CENTERLINE DIMENSIONS ARE BASIC.

NOTES:

1. CONNECTOR MATERIALS:
   HOUSING: THERMOPLASTIC UL94 V-0
   CONTACTS/SHIELD: COPPER ALLOY
   CONTACT PLATING: SELECTIVE GOLD IN CONTACT AREA
   SEE CHART FOR PART NUMBER
   SHIELD PLATING: NICKEL OR TIN
2. FOR PRODUCT SPECIFICATION SEE PR022-01.
3. DIMENSIONS AND TOLERANCES COMPLY WITH FCC/CFR 47, PART 68.
4. THE SUGGESTED PANEL OPENING IS INTENDED TO GIVE USER THE ABILITY TO HAVE REASONABLE JACK/PANEL CLEARANCES, YET MAINTAIN GROUNDING CAPABILITY. THESE VARIABLES CAN BE ADJUSTED IN EITHER DIRECTION BUT MAY CARRY SOME CONSEQUENCES IN THE FORM OF LOWER MATING FORCES OR TIGHTER ASSEMBLY TOLERANCES.
5. DIELECTRIC WITHSTANDING VOLTAGE (CONTACT TO SHIELD) : 2250VDC

30 MICRO-INCHES [.762um]	SS-7388H11S-PG4
CONTACT PLATING IN MATING AREA	PART NUMBER

RoHS 2002/95/EC

THIRD ANGLE PROJECTION

DO NOT SCALE DRAWING

DRAWING IS SUBJECT TO CHANGE WITHOUT NOTICE

DIMENSIONS: INCHES [METRIC]

UNLESS OTHERWISE SPECIFIED TOLERANCES ARE ±.005 [0.13] ANGLES ARE ± 1°

SHEET NO. 1 OF 1

Bel Stewart Connector

11118 Susquehanna Trail South
Glen Rock, PA 17327-9199
(717) 235-7512 Fax: (717) 235-7954 http://www.stewartconnector.com

TITLE: 8 CONTACT, 8 POSITION, SHIELDED STACKED HARMONICA JACK EMI-RFI ONE PIECE SHIELED, ESD GROUNDED

THIS DRAWING AND THE SUBJECT MATTER SHOWN THEREON ARE CONFIDENTIAL AND THE PROPRIETARY PROPERTY OF OF STEWART AND SHALL NOT BE REPRODUCED, COPIED OR USED IN ANY MANNER WITHOUT PRIOR WRITTEN CONSENT OF STEWART. THE SUBJECT MATTER MAY BE PATENTED OR A PATENT MAY BE PENDING.

DRN BY:	JAF	DATE	1-19-06
APPD BY:	TRM	DATE	6-23-06
DWG NO.	CT730152	REV.	A2

查询SS-7388H11S-PG4供应商
捷多邦，专业PCB打样工厂，24小时加急出货

REV. 4/15/03

AutoCAD