查询NE32584C-S供应商 捷多邦，专业PCB打样工厂，24小时加急出货

NEC

ULTRA LOW NOISE PSEUDOMORPHIC HJ FET

NE32584C

FEATURES

- **VERY LOW NOISE FIGURE:**
  0.45 dB Typical at 12 GHz
- **HIGH ASSOCIATED GAIN:**
  12.5 dB Typical at 12 GHz
- **$L_G \leq 0.20$ µm, $W_G = 200$ µm**
- **LOW COST METAL CERAMIC PACKAGE**
- **TAPE & REEL PACKAGING OPTION AVAILABLE**

NOISE FIGURE & ASSOCIATED GAIN vs. FREQUENCY
V_{DS} = 2 V, I_{DS} = 10 mA

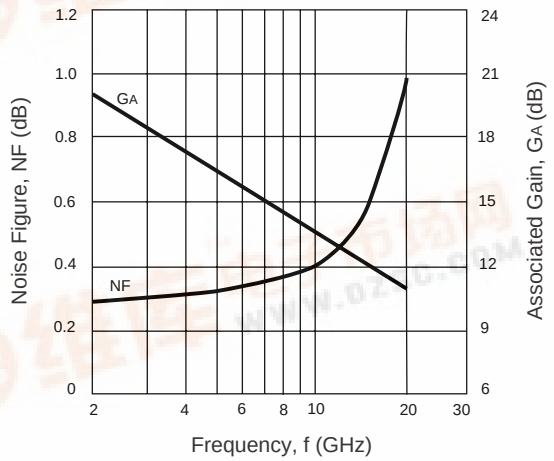

DESCRIPTION

The NE32584C is a pseudomorphic Hetero-Junction FET that uses the junction between Si-doped AlGaAs and undoped InGaAs to create very high mobility electrons. The device features mushroom shaped TiAl gates for decreased gate resistance and improved power handling capabilities. The mushroom gate also results in lower noise figure and high associated gain. This device is housed in an epoxy-sealed, metal/ceramic package and is intended for high volume consumer and industrial applications.

NEC's stringent quality assurance and test procedures assure the highest reliability and performance.

ELECTRICAL CHARACTERISTICS (T_A = 25°C)

PART NUMBER PACKAGE OUTLINE			NE32584C 84C		
SYMBOLS	**PARAMETERS AND CONDITIONS**	**UNITS**	**MIN**	**TYP**	**MAX**
NF^1	Optimum Noise Figure, V_{DS} = 2 V, I_{DS} = 10 mA, f = 12 GHz	dB		0.45	0.55
G_A^1	Associated Gain, V_{DS} = 2 V, I_{DS} = 10 mA, f = 12 GHz	dB	11.0	12.5	
I_{DSS}	Saturated Drain Current, V_{DS} = 2 V, V_{GS} = 0 V	mA	20	60	90
V_P	Pinch-off Voltage, V_{DS} = 2 V, I_{DS} = 100 µA	V	-2.0	-0.7	-0.2
g_m	Transconductance, V_{DS} = 2 V, I_D = 10 mA	mS	45	60	
I_{GSO}	Gate to Source Leakage Current, V_{GS} = -3 V	µA		0.5	10.0
$R_{TH\ (CH-A)}$	Thermal Resistance (Channel to Ambient)	°C/W		750	
$R_{TH\ (CH-C)}$	Thermal Resistance (Channel to Case)	°C/W			350

Note:
1. Typical values of noise figures and associated gain are those obtained when 50% of the devices from a large number of lots were individually measured in a circuit with the input individually tuned to obtain the minimum value. Maximum values are criteria established on the production line as a "go-no-go" screening tuned for the "generic" type but not each specimen.

找PDF 维库一下 pdf.dzsc.com

ABSOLUTE MAXIMUM RATINGS[1] (T_A = 25°C)

SYMBOLS	PARAMETERS	UNITS	RATINGS
V_{DS}	Drain to Source Voltage	V	4.0
V_{GS}	Gate to Source Voltage	V	-3.0
I_{DS}	Drain Current	mA	I_{DSS}
I_{GRF}	Gate Current	μA	100
T_{CH}	Channel Temperature	°C	150
T_{STG}	Storage Temperature	°C	-65 to +150
P_T	Total Power Dissipation	mW	165

Note:
1. Operation in excess of any one of these parameters may result in permanent damage.

TYPICAL NOISE PARAMETERS (T_A = 25°C)

V_{DS} = 2 V, I_D = 10 mA

FREQ. (GHz)	NF_{OPT} (dB)	G_A (dB)	Γ_{OPT} MAG	Γ_{OPT} ANG	Rn/50
2	0.29	20.0	0.86	22	0.27
4	0.30	18.3	0.76	45	0.25
6	0.33	16.5	0.69	70	0.18
8	0.36	15.0	0.63	96	0.11
10	0.40	13.6	0.59	122	0.08
12	0.45	12.5	0.54	147	0.04
14	0.54	12.0	0.48	171	0.04
16	0.68	11.8	0.40	-165	0.05
18	0.85	11.5	0.31	-144	0.06

TYPICAL PERFORMANCE CURVES (T_A = 25°C)

TOTAL POWER DISSIPATION vs. AMBIENT TEMPERATURE

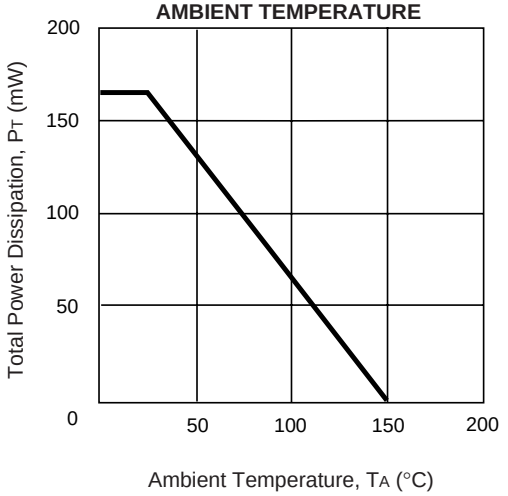

DRAIN CURRENT vs. DRAIN TO SOURCE VOLTAGE

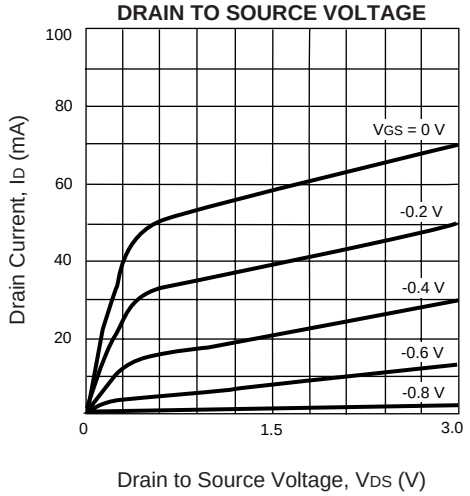

NOISE FIGURE AND ASSOCIATED GAIN vs. FREQUENCY

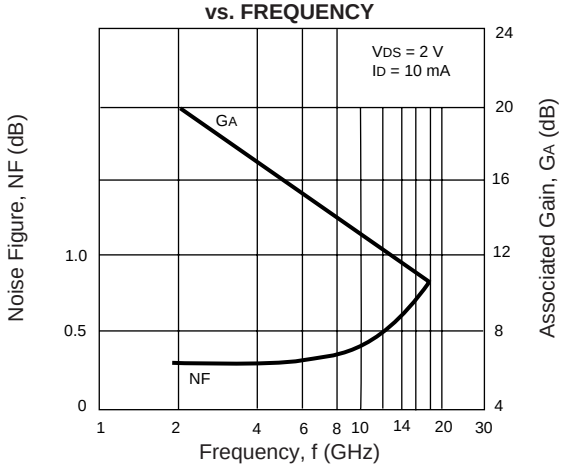

NOISE FIGURE AND ASSOCIATED GAIN vs. DRAIN CURRENT

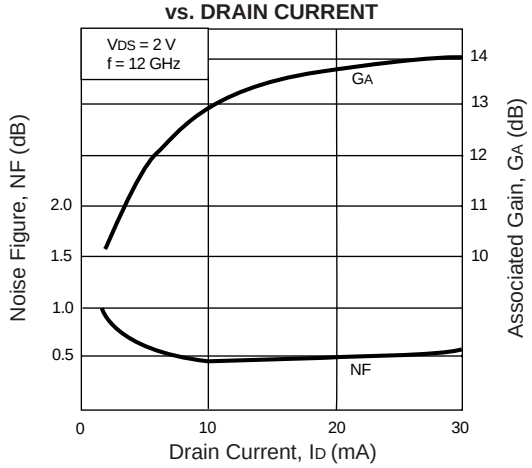

TYPICAL COMMON SOURCE SCATTERING PARAMETERS (T_A = 25°C)

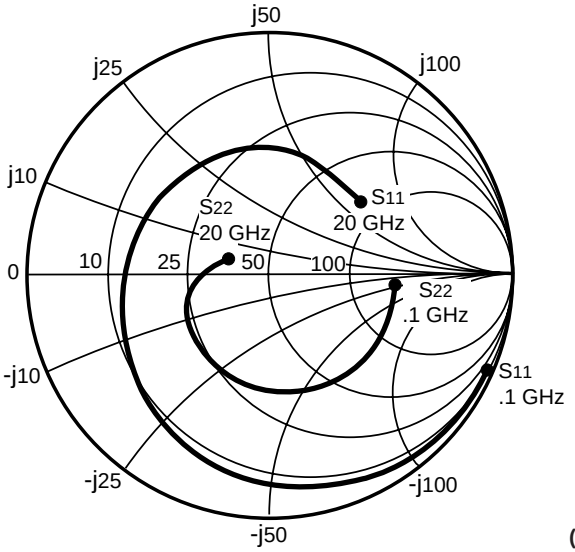

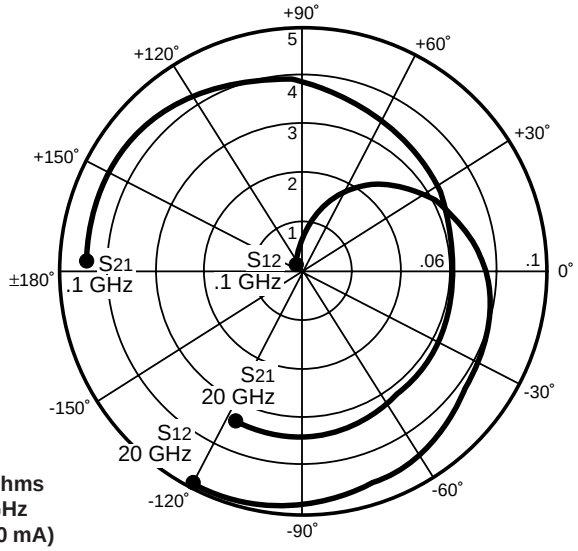

Coordinates in Ohms
Frequency in GHz
(V_{DS} = 2 V, I_{DS} = 10 mA)

NE32584C
V_{DS} = 2 V, I_{DS} = 10 mA

FREQUENCY	S_{11}		S_{21}		S_{12}		S_{22}		K	MAG
(GHz)	MAG	ANG	MAG	ANG	MAG	ANG	MAG	ANG		(dB)
0.100	1.001	-1.75	5.202	178.07	0.001	83.90	0.587	-1.59	-0.075	37.162
0.200	1.001	-3.60	5.189	176.33	0.003	86.02	0.585	-3.13	-0.025	32.380
0.500	0.998	-8.95	5.178	170.78	0.008	83.30	0.585	-7.50	0.047	28.111
1.000	0.989	-17.72	5.128	161.98	0.015	76.85	0.581	-14.91	0.118	25.339
2.000	0.967	-34.63	5.013	145.12	0.030	64.62	0.576	-28.90	0.188	22.230
3.000	0.943	-50.81	4.865	128.82	0.043	53.33	0.567	-42.28	0.235	20.536
4.000	0.907	-66.71	4.703	112.71	0.054	42.06	0.554	-55.03	0.312	19.400
5.000	0.857	-81.86	4.493	97.04	0.062	31.40	0.531	-66.77	0.426	18.601
6.000	0.800	-96.39	4.297	82.71	0.069	21.97	0.503	-77.55	0.541	17.943
7.000	0.755	-110.25	4.143	69.20	0.075	13.52	0.483	-87.72	0.618	17.423
8.000	0.725	-124.55	4.068	55.99	0.081	5.09	0.470	-97.81	0.646	17.009
9.000	0.683	-138.37	3.994	42.58	0.084	-3.80	0.453	-106.93	0.724	16.771
10.000	0.663	-154.60	4.017	28.11	0.089	-12.63	0.431	-116.85	0.734	16.545
11.500	0.585	178.24	3.849	6.85	0.091	-26.79	0.359	-134.35	0.900	16.263
12.000	0.565	168.24	3.790	-0.46	0.090	-31.63	0.335	-140.87	0.960	16.244
13.000	0.551	148.32	3.720	-13.97	0.090	-41.14	0.300	-157.16	1.000	16.163
14.000	0.548	129.66	3.669	-28.93	0.089	-52.52	0.281	-173.11	1.029	15.113
15.000	0.560	112.17	3.652	-44.37	0.087	-64.18	0.276	171.08	1.025	15.253
16.000	0.565	94.50	3.557	-60.11	0.085	-76.05	0.274	154.07	1.052	14.824
17.000	0.565	76.97	3.448	-74.93	0.084	-89.05	0.259	135.78	1.101	14.196
18.000	0.575	60.33	3.357	-89.44	0.082	-103.35	0.263	116.62	1.120	14.012

Note:
1. Gain Calculation:

$$MAG = \frac{|S_{21}|}{|S_{12}|}\left(K \pm \sqrt{K^2 - 1}\right).$$ When K ≤ 1, MAG is undefined and MSG values are used. $$MSG = \frac{|S_{21}|}{|S_{12}|}, \quad K = \frac{1 + |\Delta|^2 - |S_{11}|^2 - |S_{22}|^2}{2\,|S_{12}\,S_{21}|}, \quad \Delta = S_{11}\,S_{22} - S_{21}\,S_{12}$$

MAG = Maximum Available Gain
MSG = Maximum Stable Gain

TYPICAL COMMON SOURCE SCATTERING PARAMETERS (T_A = 25°C)

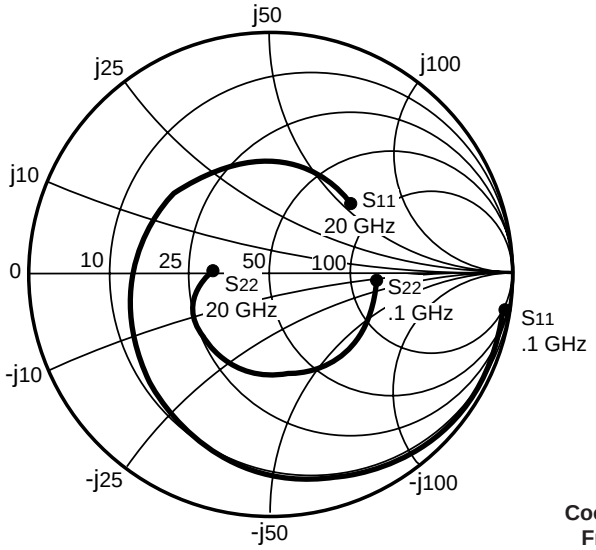

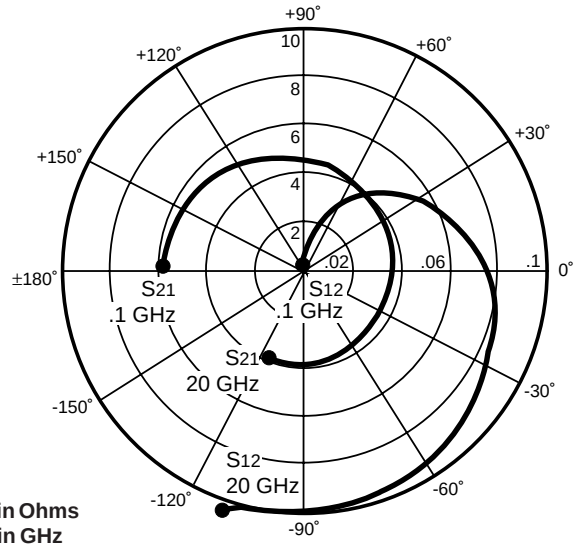

Coordinates in Ohms
Frequency in GHz
(V_{DS} = 2 V, I_{DS} = 20 mA)

NE32584C
V_{DS} = 2 V, I_{DS} = 20 mA

FREQUENCY	S_{11}		S_{21}		S_{12}		S_{22}		K	MAG
(GHz)	MAG	ANG	MAG	ANG	MAG	ANG	MAG	ANG		(dB)
0.100	1.001	-1.81	6.552	178.03	0.001	84.76	0.509	-1.76	-0.078	38.164
0.200	1.000	-3.77	6.531	176.09	0.003	86.79	0.507	-3.19	0.011	33.379
0.500	0.997	-9.43	6.511	170.33	0.007	83.69	0.506	-7.53	0.063	29.685
1.000	0.987	-18.65	6.432	161.14	0.014	77.38	0.502	-14.91	0.134	26.622
2.000	0.958	-36.35	6.243	143.49	0.027	65.71	0.496	-28.84	0.232	23.640
3.000	0.925	-53.13	5.999	126.61	0.038	55.04	0.487	-41.96	0.303	21.983
4.000	0.879	-69.42	5.734	110.09	0.048	44.64	0.474	-54.20	0.397	20.772
5.000	0.821	-84.79	5.417	94.24	0.056	34.90	0.454	-65.25	0.519	19.856
6.000	0.757	-99.35	5.121	79.85	0.062	26.33	0.430	-75.31	0.646	19.170
7.000	0.708	-113.22	4.892	66.26	0.068	18.60	0.413	-84.85	0.723	18.570
8.000	0.674	-127.54	4.754	53.02	0.074	10.86	0.401	-94.21	0.754	18.078
9.000	0.628	-141.15	4.617	39.77	0.078	2.80	0.389	-102.27	0.826	17.723
10.000	0.605	-157.21	4.599	25.65	0.083	-5.30	0.370	-111.19	0.836	17.436
11.000	0.549	-174.62	4.503	11.83	0.086	-14.51	0.330	-121.08	0.927	17.190
12.000	0.513	165.35	4.291	-2.24	0.087	-23.36	0.283	-133.16	1.017	16.128
13.000	0.504	145.18	4.193	-15.42	0.087	-32.46	0.248	-149.27	1.052	15.439
14.000	0.504	126.44	4.123	-29.96	0.088	-43.35	0.229	-165.01	1.061	15.202
15.000	0.517	109.11	4.106	-45.03	0.087	-54.72	0.225	179.28	1.050	15.376
16.000	0.527	91.65	4.001	-60.55	0.086	-66.36	0.224	161.59	1.058	15.203
17.000	0.530	74.05	3.888	-75.22	0.085	-79.11	0.208	142.58	1.098	14.697
18.000	0.543	57.36	3.785	-89.66	0.083	-93.10	0.212	121.91	1.114	14.536

Note:
1. Gain Calculation:

$MAG = \frac{|S_{21}|}{|S_{12}|}\left(K \pm \sqrt{K^2 - 1}\right)$. When $K \leq 1$, MAG is undefined and MSG values are used. $MSG = \frac{|S_{21}|}{|S_{12}|}$, $K = \frac{1 + |\Delta|^2 - |S_{11}|^2 - |S_{22}|^2}{2\,|S_{12}\,S_{21}|}$, $\Delta = S_{11}\,S_{22} - S_{21}\,S_{12}$

MAG = Maximum Available Gain
MSG = Maximum Stable Gain

NE32584C NONLINEAR MODEL

SCHEMATIC

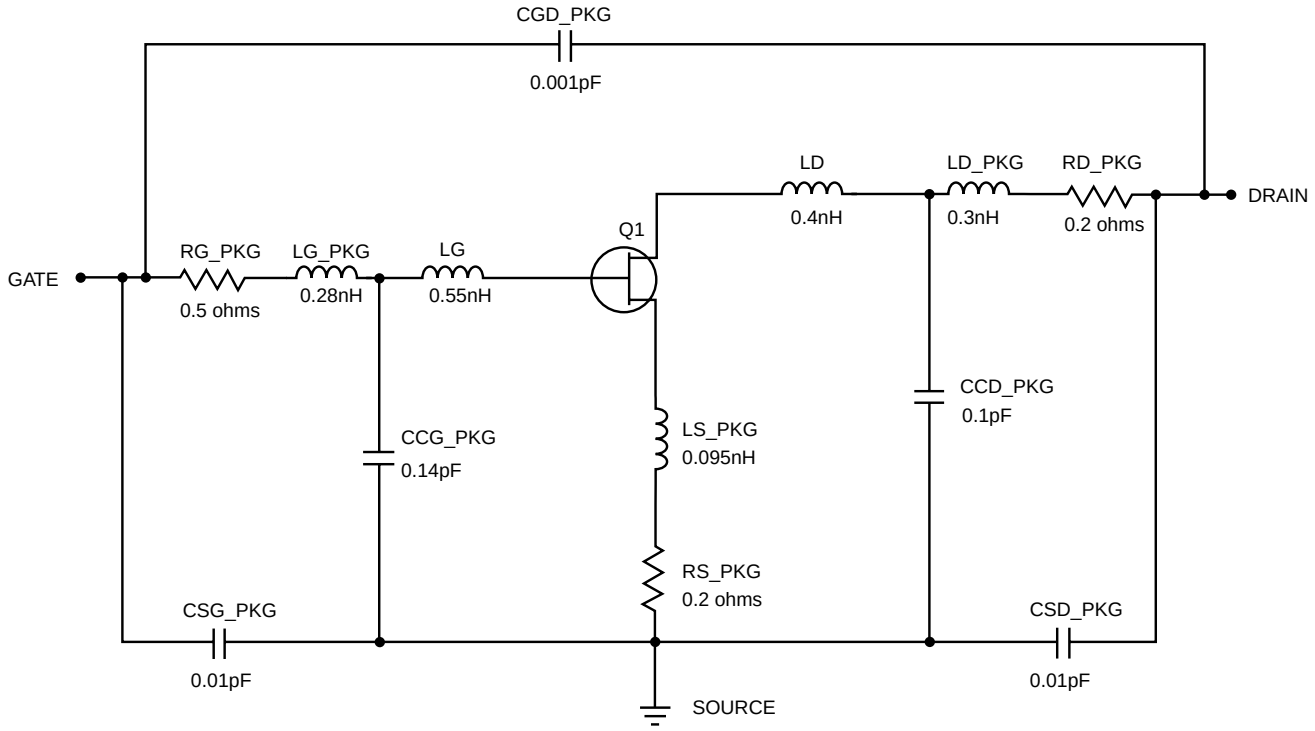

FET NONLINEAR MODEL PARAMETERS (1)

Parameters	Q1	Parameters	Q1
VTO	-0.6723	RG	3
VTOSC	0	RD	2
ALPHA	4	RS	2
BETA	0.115	RGMET	0
GAMMA	0.08	KF	0
GAMMADC	0.07	AF	1
Q	2	TNOM	27
DELTA	0.5	XTI	3
VBI	0.715	EG	1.43
IS	3e-13	VTOTC	0
N	1.22	BETATCE	0
RIS	0	FFE	1
RID	0		
TAU	5e-12		
CDS	0.13e-12		
RDB	1000		
CBS	1e-9		
CGSO	0.3e-12		
CGDO	0.02e-12		
DELTA1	0.3		
DELTA2	0.1		
FC	0.5		
VBR	Infinity		

(1) Series IV Libra TOM Model

UNITS

Parameter	Units
time	seconds
capacitance	farads
inductance	henries
resistance	ohms
voltage	volts
current	amps

MODEL RANGE

Frequency: 0.1 to 18 GHz
Bias: V_{DS} = 1 V to 3 V, I_D = 5 mA to 30 mA
Date: 3/24/97

OUTLINE DIMENSIONS (Units in mm)

PACKAGE OUTLINE 84C

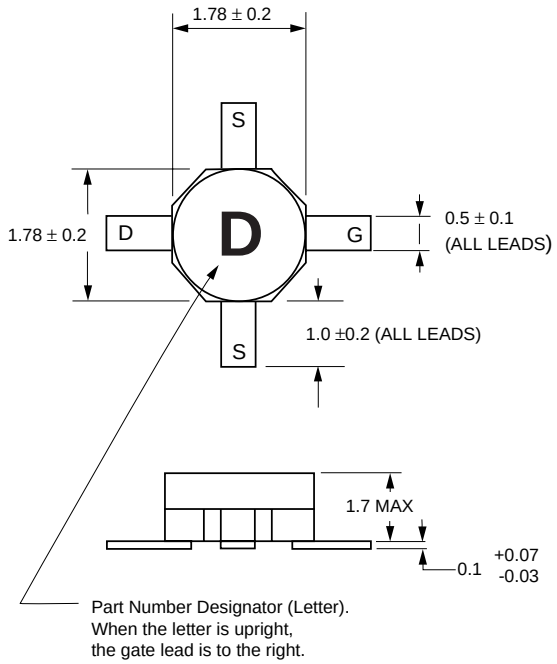

ORDERING INFORMATION

PART NUMBER	AVAILABILITY	LEAD LENGTH	PACKAGE OUTLINE
NE32584C-S	Bulk up to 1K	1.0 mm	84C
NE32584C-T1	1K/Reel	1.0 mm	84C