查询L829-1X1T-91供应商 捷多邦，专业PCB打样工厂，24小时加急出货

INTEGRATED CONNECTOR MODULES

L829-1X1T-91 10/100Base-TX Ultra Low Profile MagJack®

RoHS 2002/95/EC

LED1 POLARITY			LED2 POLARITY		
PIN 13	PIN 14	COLOR	PIN 15	PIN 16	COLOR
–	+	YELLOW	–	+	GREEN
			+	–	ORANGE

ELECTRICAL CHARACTERISTICS @ 25°C

TURNS RATIO
- TX 1CT : 1
- RX 1CT : 1

OCL @ 100kHz/100mVRMS (0–70°C)
- 8mA DC BIAS 350µH MIN.

INS. LOSS
- 0.1MHz TO 1MHz −1.1 dB MAX
- 1MHz TO 65MHz −0.5 dB MAX
- 65MHz TO 100MHz −0.8 dB MAX
- 100MHz TO 125MHz −1.2 dB MAX

RET. LOSS (MIN) @ 100 OHMS +/− 15%
- 0.5MHz–40MHz −18 dB
- 40MHz–100MHz −12+20LOG(f/80MHz) dB

CM TO CM REJ
- 100kHz – 100MHz −30 dB MIN

CM TO DM REJ
- 100kHz – 100MHz −35 dB MIN

HIPOT (Isolation Voltage): 1500 Vrms or 2250 VDC
- 100% OF PRODUCT TESTED IN PRODUCTION

LED 1
- VF (FORWARD VOLTAGE) IF=20mA YELLOW 2.1V TYP.
- λD (DOMINANT WAVELENGTH) IF=20mA YELLOW 590nm TYP.

LED 2
- VF (FORWARD VOLTAGE) IF=20mA GREEN 2.2V TYP.
  ORANGE 2.0V TYP.
- λD (DOMINANT WAVELENGTH) IF=20mA GREEN 565nm TYP.
  ORANGE 610nm TYP.

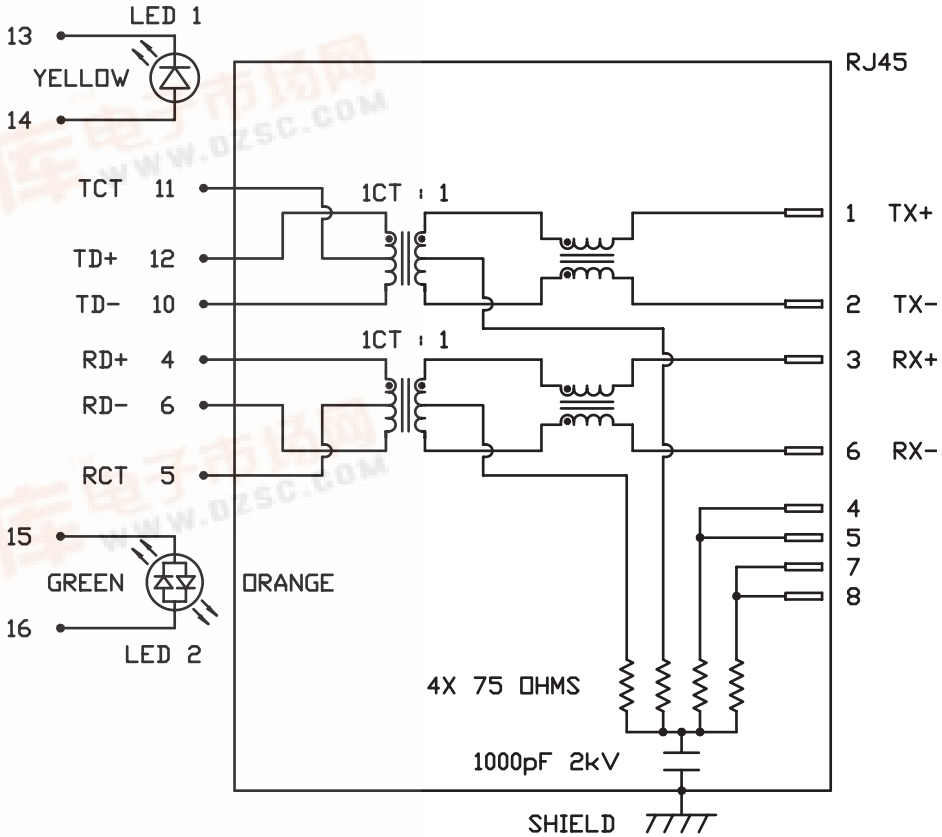

MagJack®

©2006 Bel Fuse Inc. Specifications subject to change without notice. 05.06

INTEGRATED CONNECTOR MODULES

L829-1X1T-91 10/100Base-TX Ultra Low Profile MagJack®

RoHS 2002/95/EC

MECHANICAL SPECIFICATION

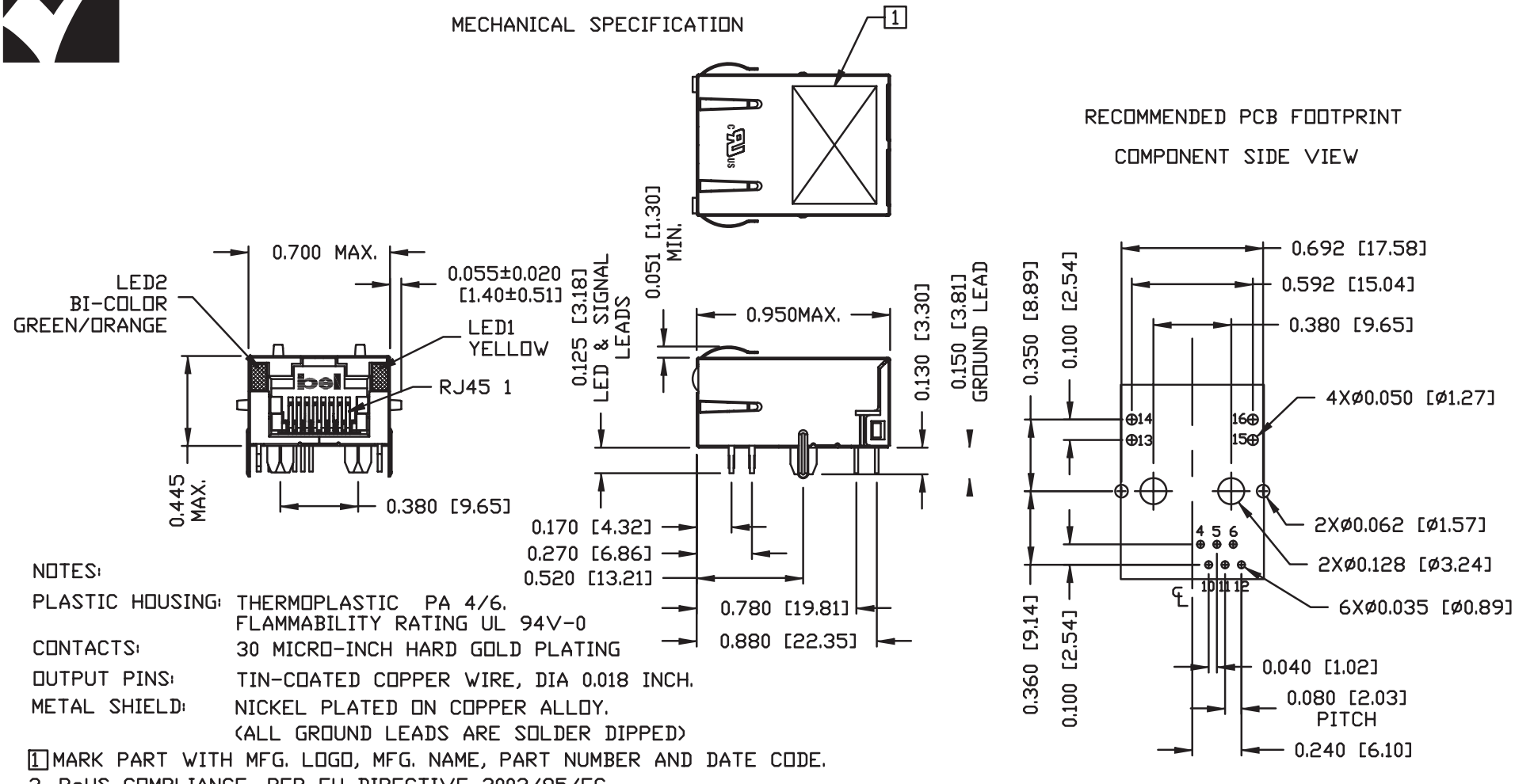

NOTES:

PLASTIC HOUSING:	THERMOPLASTIC PA 4/6. FLAMMABILITY RATING UL 94V-0
CONTACTS:	30 MICRO-INCH HARD GOLD PLATING
OUTPUT PINS:	TIN-COATED COPPER WIRE, DIA 0.018 INCH.
METAL SHIELD:	NICKEL PLATED ON COPPER ALLOY. (ALL GROUND LEADS ARE SOLDER DIPPED)

1 MARK PART WITH MFG. LOGO, MFG. NAME, PART NUMBER AND DATE CODE.

2. RoHS COMPLIANCE, PER EU DIRECTIVE 2002/95/EC.

c UL us UL RECOGNIZED - FILE #E196366 AND E169987.

MagJack®

©2006 Bel Fuse Inc. Specifications subject to change without notice. 05.06

INTEGRATED CONNECTOR MODULES

L829-1X1T-91 10/100Base-TX Ultra Low Profile MagJack®

RoHS 2002/95/EC

SUGGESTED PANEL OPENING

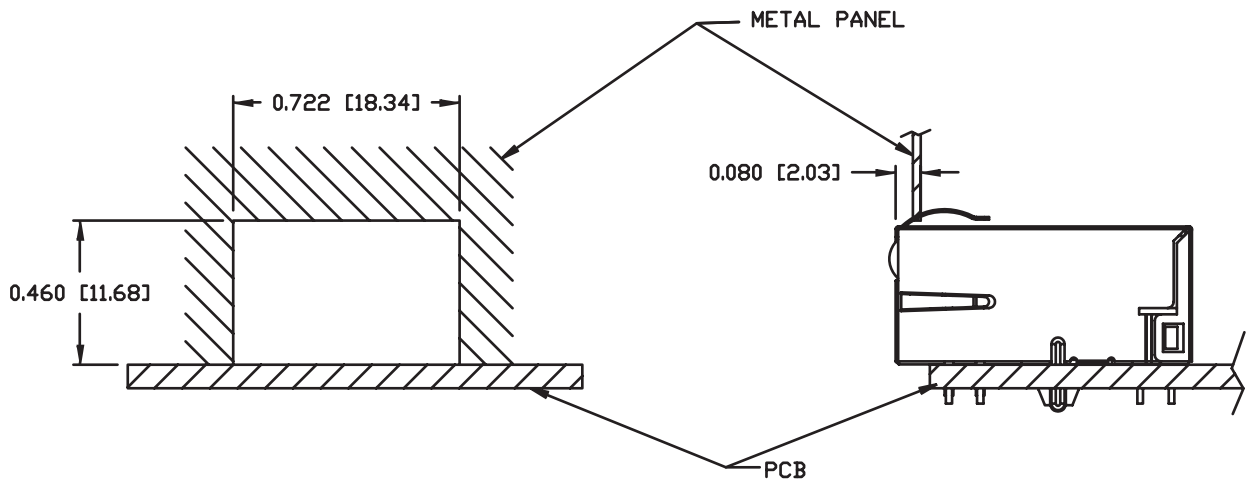

NOTE:
THE DISTANCE OF PANEL INSIDE SURFACE RELATIVE TO FRONT SURFACE OF PART IS ONLY A SUGGESTION.
IN CASE THIS DISTANCE IS DIFFERENT, THE REQUIRED PANEL OPENING DIMENSIONS CHANGE ACCORDINGLY.

TRAY PACKING INFORMATION

PACKING TRAY : 0200-9999-E4 (TOP)
0200-9999-E5 (BOTTOM)

PACKING QUANTITY : 60 PCS FINISHED GOODS PER TRAY
11 TRAYS (660 PCS FINISHED GOODS) PER CARTON BOX

NOTE : CARDBOARDS ARE PLACED BETWEEN LAYERS OF PACKING TRAY INSIDE CARTON BOX
(INCLUDE THE UPPERMOST AND LOWERMOST TRAY)

©2006 Bel Fuse Inc. Specifications subject to change without notice. 05.06