查询831供应商 捷多邦，专业PCB打样工厂，24小时加急出货

Holder / No. 831

PC Mount, Shocksafe 5x20mm Fuses

Vertical / 4 - Pin

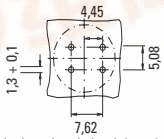

Holes in the printed circuit board: 1,3 + 0,1

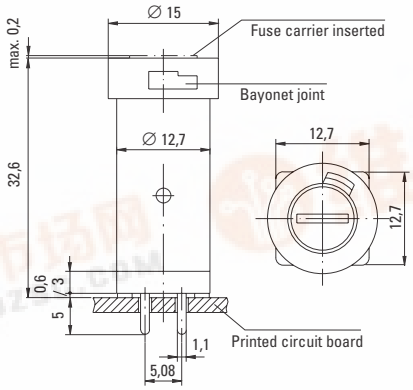

Cap / No. 835

Flush Mount Type

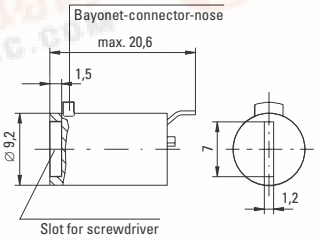

Cap / No. 837

Finger Grip Type

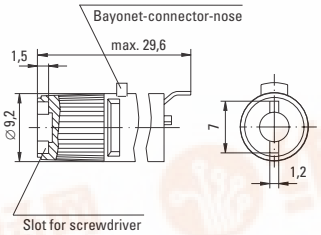

Order Information

Packaging
Bulk (100 pcs.)

Order Numbers

Holder	No. 831 0000 000
Cap, Flush Mount	No. 835 0000 000
Cap, Finger Grip	No. 837 0000 000

Note: 1,00 means the number one with two decimal places. 1,000 means the number one thousand.

Specifications

Standard
IEC 60127-6
UL 512
CSA C22.2. No.39

Approvals (only 831/835)
VDE: License No. 123441
SEMKO: Certificate No. 9939091
UL Recognized: File No. E 70164
CSA Certified: File No. 47574

Mounting
(4) Solder pins 0.5mm x 1.1mm
The pins spaced at 5.08mm form a common connection.

Protection Class & Category
IP 40 (IEC 60529)
PC2 (IEC 60127-6)

Materials

Holder/Cap:	Black Thermoplastic Polyamide PA 6.6, UL94 V-0
Metal Parts:	Copper alloy, corrosion protected
Terminals:	Solderable, tinned

Electrical Data (23°C)

Rated Voltage:	250V
Rated Current:	6.3A (VDE/SEMKO) 16A (UL/CSA)
Rated Power:	2.5W (VDE/SEMKO)

Operating Temperature
-25°C to +70°C (consider de-rating)

Climatic Test
-25°C/+70°C/21 days (IEC 60068-2-1...3)

Stock Conditions
+10°C to +60°C
relative humidity ≤ 75% yearly average, without dew, maximum value for 30 days - 95%

Vibration Resistance
24 cycles at 15 min. each (IEC 60068-2-6)
10 - 60Hz at 0.75mm amplitude
60 - 2000Hz at 10g acceleration

Contact Resistance
≤ 5mΩ

Dielectric Strength
> 1.5 kV

Impulse Voltage
4 kV, 50 Hz, 1 min., dry

Insulation Resistance
> 10^3 MΩ (500 VDC, 1 min.)

Solderability
235°C, 3 sec. (Wave)
350°C, 1 sec. (Soldering Iron)

Soldering Heat Resistance
260°C, 5 sec. (IEC 60068-2-20)

Minimum Cross Section
Conducting path - 0.2mm^2

Marking
831, 250V, Approvals

Unit Weight
4.1g (Holder) / 1.6g (835) / 2.2g (837)

找PDF 维库一下 pdf.dzsc.com