查询RID-0642-H供应商 捷多邦，专业PCB打样工厂，24小时加急出货

Inlet Filters

A general purpose inlet filter giving good performance for both common mode and differential mode interference.

Meets overvoltage category II of IEC 664 and complies with IEC 950.

Typical applications are personal computers and computer peripherals, digital equipment, measuring instruments, monitors and display units, vending machines, games machines, printers and copiers.

Approvals:

Rated Voltage:	250VAC
Frequency:	50/60Hz
Temperature Range:	-25°C - + 85°C

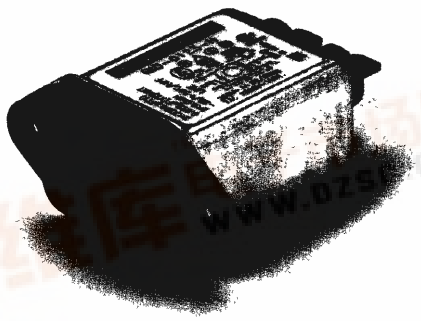

Insertion Loss Curves

RID 0142 H

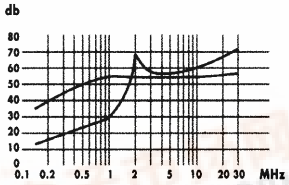

RID 0342 H

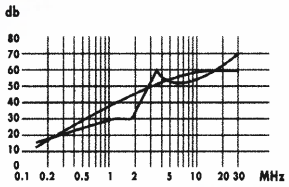

RID 0642 H

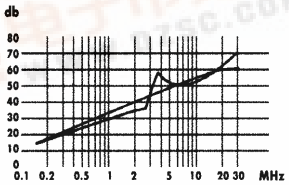

■ = Common Mode
■ = Differential Mode

Dimensions

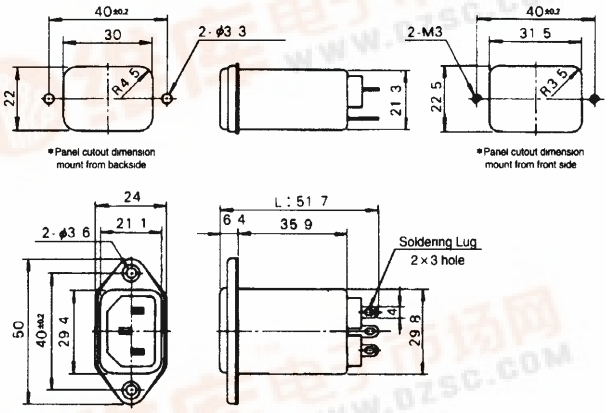

Electrical Schematic

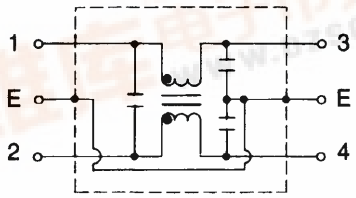

Technical Data

Type	Current @ 40°C	Max leakage current @ 250V AC 50HZ	Terminations
RID 0142 H	1A	0.35mA	Faston Tags
RID 0342 H	3A	0.35mA	Faston Tags
RID 0642 H	6A	0.35mA	Faston Tags

找PDF 维库一下 pdf.dzsc.com