查询FPAB30PH60供应商 捷多邦，专业PCB打样工厂，24小时加急出货

FAIRCHILD SEMICONDUCTOR®

January, 2006

FPAB30PH60

Smart Power Module for Front-End Rectifier

General Description

FPAB30PH60 is an advanced smart power module of PFC(Power Factor Correction) that Fairchild has newly developed and designed mainly targeting mid-power application especially for an air conditioners. It combines optimized circuit protection and drive IC matched to high frequency switching IGBTs. System reliability is futher enhanced by the integrated under-voltage lock-out and over-current protection function.

Features

- Low thermal resistance due to Al_2O_3-DBC substrate
- 600V-30A 2-phase IGBT PWM semi-converter including a drive IC for gate driving and protection
- Typical switching frequency of 20kHz
- Isolation rating of 2500Vrms/min.

Applications

- AC 180V ~ 264V single-phase front-end rectifier

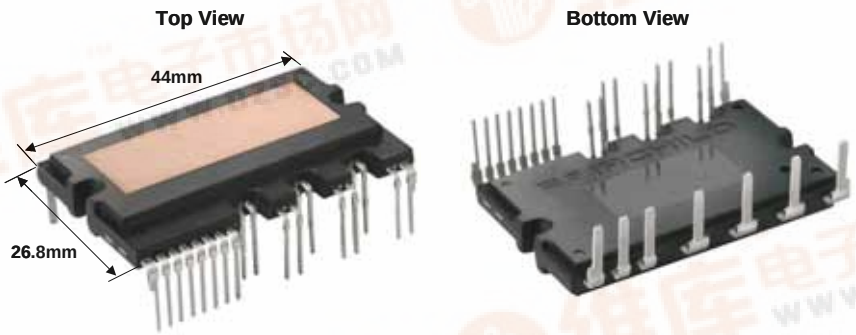

Fig. 1.

©2006 Fairchild Semiconductor Corporation

找PDF 维库一下 pdf.dzsc.com

Integrated Power Functions

- PFC converter for single-phase AC/DC power conversion (Please refer to Fig. 3)

Integrated Drive, Protection and System Control Functions

- For IGBTs: Gate drive circuit, Overcurrent circuit protection (OC), Control supply circuit under-voltage (UV) protection
- Fault signaling: Corresponding to a UV fault
- Input interface: 5V CMOS/LSTTL compatible, Schmitt trigger input

Pin Configuration

Top View

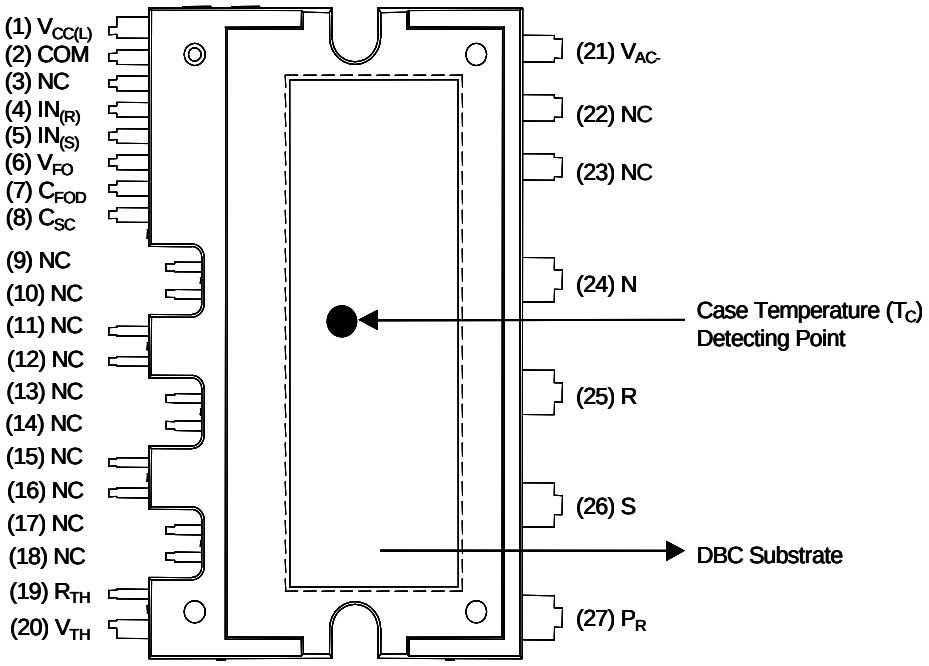

Fig. 2.

Pin Descriptions

Pin Number	Pin Name	Pin Description
1	V_{CC}	Common Bias Voltage for IC and IGBTs Driving
2	COM	Common Supply Ground
4	$IN_{(R)}$	Signal Input for Low-side R-phase IGBT
5	$IN_{(S)}$	Signal Input for Low-side S-phase IGBT
6	V_{FO}	Fault Output
7	C_{FOD}	Capacitor for Fault Output Duration Time Selection
8	C_{SC}	Capacitor (Low-pass Filter) for Over Current Detection
19	$R_{(TH)}$	NTC Thermistor terminal
20	$V_{(TH)}$	NTC Thermistor terminal
21	V_{AC-}	Negative Terminal of DC–Link (DIODE) for Sensing
24	N	Negative Rail of DC–Link (IGBT)
25	R	Output for R Phase
26	S	Output for S Phase
27	P_R	Positive Rail of DC–Link
3, 9~18, 22~23	NC	No Connection

Internal Equivalent Circuit and Input/Output Pins

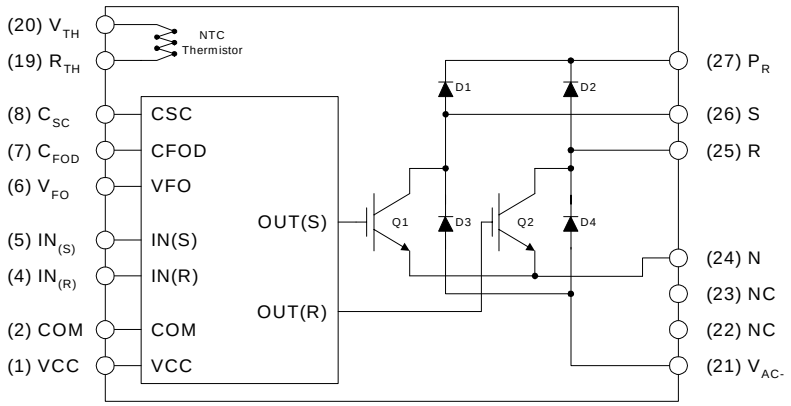

Note :
1) Converter is composed of two IGBTs including four diodes and one IC which has gate driving and protection functions.

Fig. 3.

Absolute Maximum Ratings (T_J = 25°C, Unless Otherwise Specified)

Converter Part

Item	Symbol	Condition	Rating	Unit
Supply Voltage	V_i	Applied between R-S	264	V_{RMS}
Supply Voltage (Surge)	$V_{i(Surge)}$	Applied between R-S	500	V
Output Voltage	V_{PN}	Applied between P- N	450	V
Output Voltage (Surge)	$V_{PN(Surge)}$	Applied between P- N	500	V
Collector-emitter Voltage	V_{CES}		600	V
Input Current (100% Load)	I_i	T_C < 95°C, V_i=220V, V_{PN}= 390V, V_{PWM}=20kHz	20	A
Input Current (125% Load)	$I_{i(125\%)}$	T_C < 95°C, V_i=220V, V_{PN}= 390V, V_{PWM}=20kHz, 1min Non-repetitive	25	A
Collector Dissipation	P_C	T_C = 25°C per One IGBT	83	W
Operating Junction Temperature	T_J	(Note 1)	-20 ~ 125	°C

Note

1. The maximum junction temperature rating of the power chips integrated within the SPM is 150 °C(@$T_C \leq$ 100°C). However, to insure safe operation of the SPM, the average junction temperature should be limited to $T_{J(ave)} \leq$ 125°C (@$T_C \leq$ 100°C)

Control Part

Item	Symbol	Condition	Rating	Unit
Control Supply Voltage	V_{CC}	Applied between V_{CC} - COM	20	V
Input Signal Voltage	V_{IN}	Applied between IN - COM	-0.3~5.5	V
Fault Output Supply Voltage	V_{FO}	Applied between V_{FO} - COM	-0.3~V_{CC}+0.3	V
Fault Output Current	I_{FO}	Sink Current at V_{FO} Pin	5	mA
Current Sensing Input Voltage	V_{SC}	Applied between C_{SC} - COM	-0.3~V_{CC}+0.3	V

Total System

Item	Symbol	Condition	Rating	Unit
Module Case Operation Temperature	T_C		-20 ~ 100	°C
Storage Temperature	T_{STG}		-40 ~ 125	°C
Isolation Voltage	V_{ISO}	60Hz, Sinusoidal, AC 1 minute, Connection Pins to DBC	2500	V_{rms}

Thermal Resistance

Item	Symbol	Condition	Min.	Typ.	Max.	Unit
Junction to Case Thermal Resistance (Referenced to PKG center)	$R_{\theta(j-c)Q}$	IGBT	-	-	1.2	°C/W
	$R_{\theta(j-c)HD}$	High-side diode	-	-	2.0	°C/W
	$R_{\theta(j-c)LD}$	Low-side diode	-	-	1.4	°C/W

Note :

2. For the measurement point of case temperature(T_C), please refer to Fig. 2.

©2006 Fairchild Semiconductor Corporation

Electrical Characteristics (T_J = 25°C, Unless Otherwise Specified)

Converter Part

Item	Symbol	Condition	Min.	Typ.	Max.	Unit
IGBT saturation voltage	$V_{CE(sat)}$	V_{CC} =15V, V_{IN} = 5V; I_C =30A	-	2.4	3.1	V
High-side diode voltage	V_{FH}	I_F = 30A	-	1.9	2.5	V
Low-side diode voltage	V_{FL}	I_F = 30A	-	1.2	1.6	V
Switching Times	t_{ON}	V_{PN} = 400V, V_{CC} = 15V, I_C =30A V_{IN} = 0V ↔ 5V, Inductive Load (Note 3)	-	550	-	ns
	$t_{C(ON)}$		-	200	-	ns
	t_{OFF}		-	430	-	ns
	$t_{C(OFF)}$		-	180	-	ns
	t_{rr}		-	60	-	ns
	I_{rr}		-	6	-	A
Collector - emitter Leakage Current	I_{CES}	V_{CE} = V_{CES}	-	-	250	μA

Note
3. t_{ON} and t_{OFF} include the propagation delay time of the internal drive IC. $t_{C(ON)}$ and $t_{C(OFF)}$ are the switching time of IGBT itself under the given gate driving condition internally. For the detailed information, please see Fig. 4

Control Part

Item	Symbol	Condition	Min.	Typ.	Max.	Unit
Quiescent V_{CC} Supply Current	I_{QCCL}	V_{CC} = 15V, IN = 0V; V_{CC} - COM	-	-	26	mA
Fault Output Voltage	V_{FOH}	V_{SC} = 0V, V_{FO} Circuit: 4.7kΩ to 5V Pull-up	4.5	-	-	V
	V_{FOL}	V_{SC} = 1V, V_{FO} Circuit: 4.7kΩ to 5V Pull-up	-	-	0.8	V
Over Current Trip Level	$V_{SC(ref)}$	V_{CC} = 15V	0.45	0.5	0.55	V
Supply Circuit Under-Voltage Protection	UV_{CCD}	Detection Level	10.7	11.9	13.0	V
	UV_{CCR}	Reset Level	11.2	12.4	13.2	V
Fault-out Pulse Width	t_{FOD}	C_{FOD} = 33nF (Note 4)	1.4	1.8	2.0	ms
ON Threshold Voltage	$V_{IN(ON)}$	Applied between IN - COM	3.0	-	-	V
OFF Threshold Voltage	$V_{IN(OFF)}$		-	-	0.8	V
Resistance of Thermistor	R_{TH}	@ T_C = 25°C (Note Fig. 9)	-	50	-	kΩ
		@ T_C = 80°C (Note Fig. 9)	-	5.76	-	kΩ

Note
4. The fault-out pulse width t_{FOD} depends on the capacitance value of C_{FOD} according to the following approximate equation : $C_{FOD} = 18.3 \times 10^{-6} \times t_{FOD}$[F]

©2006 Fairchild Semiconductor Corporation

Electrical Characteristics

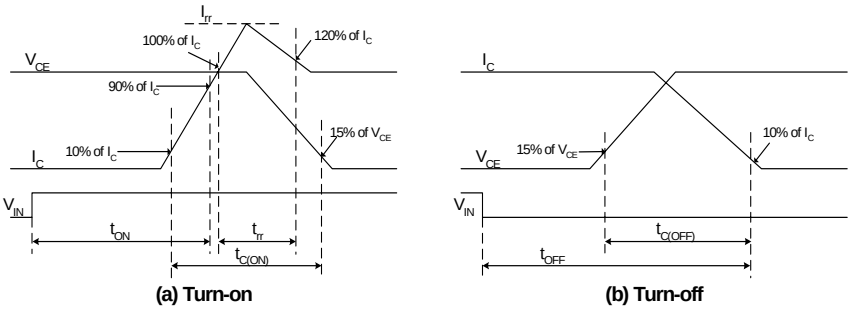

Fig. 4. Switching Time Definition

Mechanical Characteristics and Ratings

Item	Condition		Limits			Units
			Min.	Typ.	Max.	
Mounting Torque	Mounting Screw: - M3	Recommended 0.62N•m	0.51	0.62	0.72	N•m
Device Flatness	Note Fig. 5		0	-	+120	μm
Weight			-	15.00	-	g

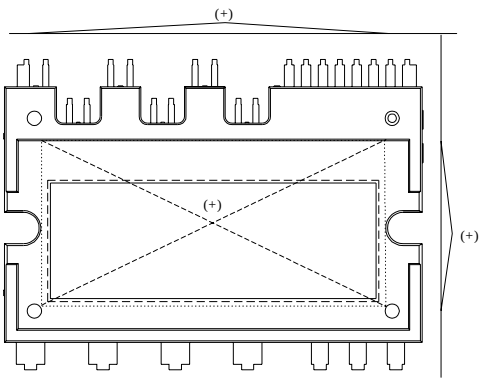

Fig. 5. Flatness Measurement Position

©2006 Fairchild Semiconductor Corporation

Time Charts of SPMs Protective Function

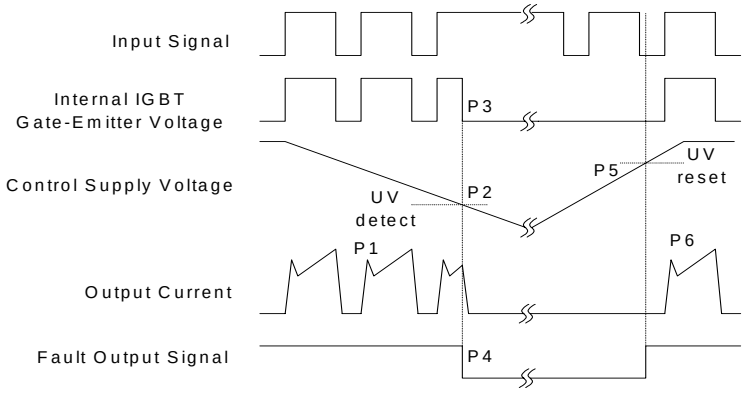

P1 : Normal operation - IGBT ON and conducting current
P2 : Under voltage detection
P3 : IGBT gate interrupt
P4 : Fault signal generation
P5 : Under voltage reset
P6 : Normal operation - IGBT ON and conducting current

Fig. 6. Under-Voltage Protection

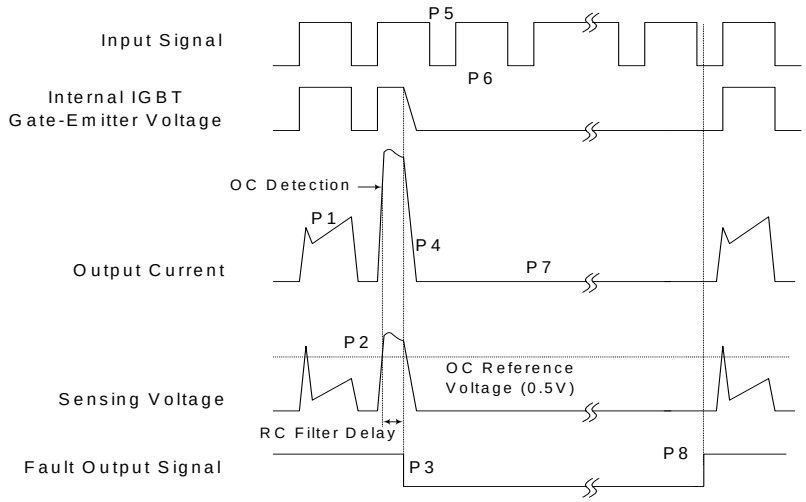

P1 : Normal operation - IGBT ON and conducting current
P2 : Over current detection
P3 : IGBT gate interrupt / Fault signal generation
P4 : IGBT is slowly turned off
P5 : IGBT OFF signal
P6 : IGBT ON signal - but IGBT cannot be turned on during the fault Output activation
P7 : IGBT OFF state
P8 : Fault Output reset and normal operation start

Fig. 7. Over Current Protection

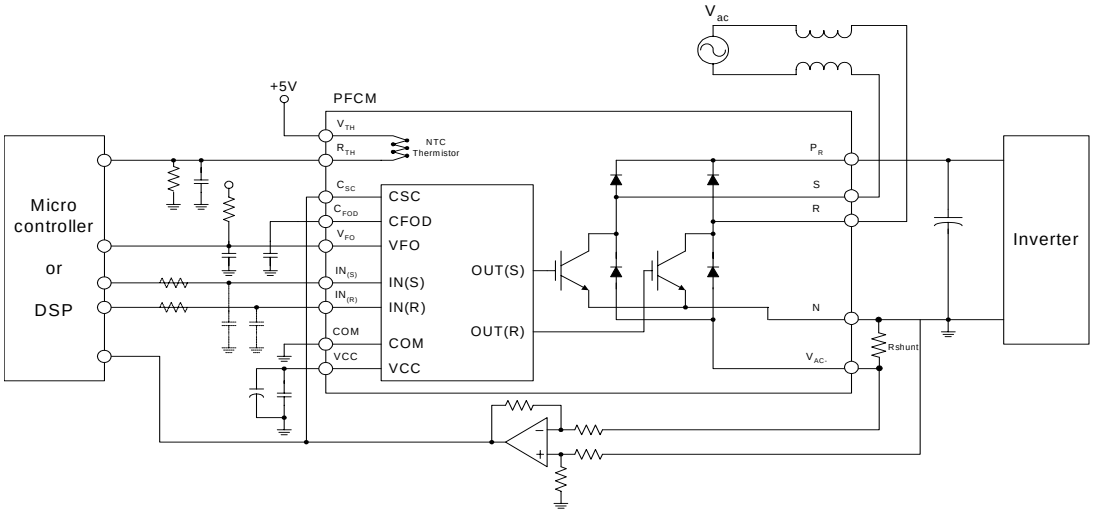

Fig. 8. Application Example

R-T Graph

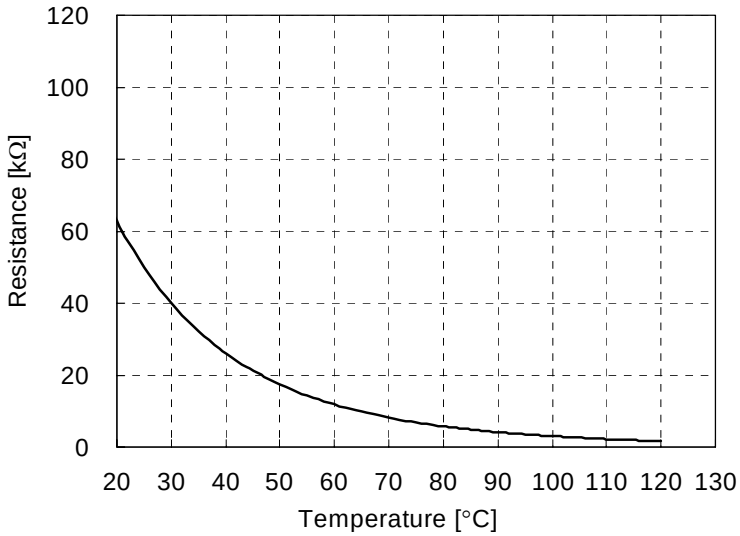

Fig. 9. R-T Curve of the Built-in Thermistor

©2006 Fairchild Semiconductor Corporation

Detailed Package Outline Drawings

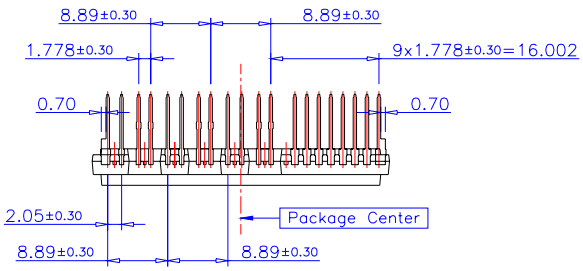

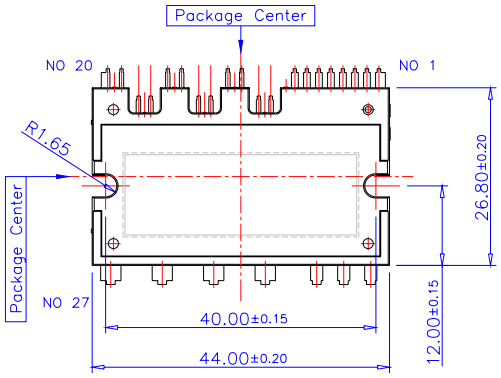

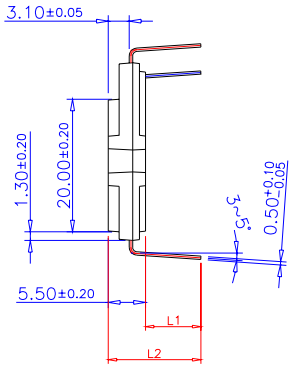

Lead Length Option

	L1 Lead Length	L2 PKG Heigth
Type 1	8.20±0.20	13.7±0.20
Type 2	5.60±0.20	11.1±0.20

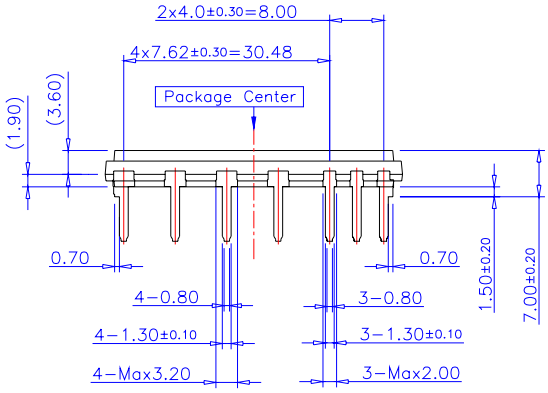

©2006 Fairchild Semiconductor Corporation

Detailed Package Outline Drawings

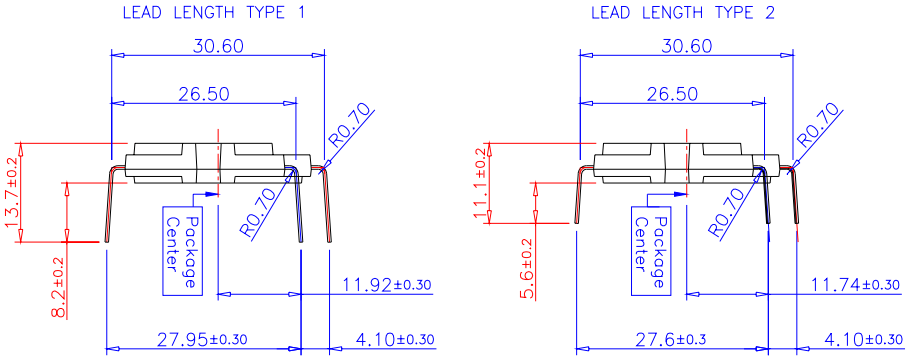

Lead Forming Dimension

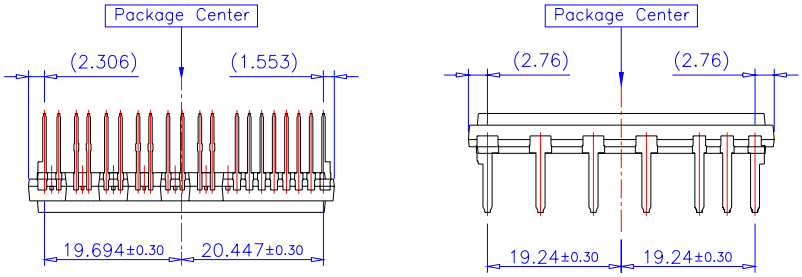

PKG Center to Lead Distance

Detailed Package Outline Drawings

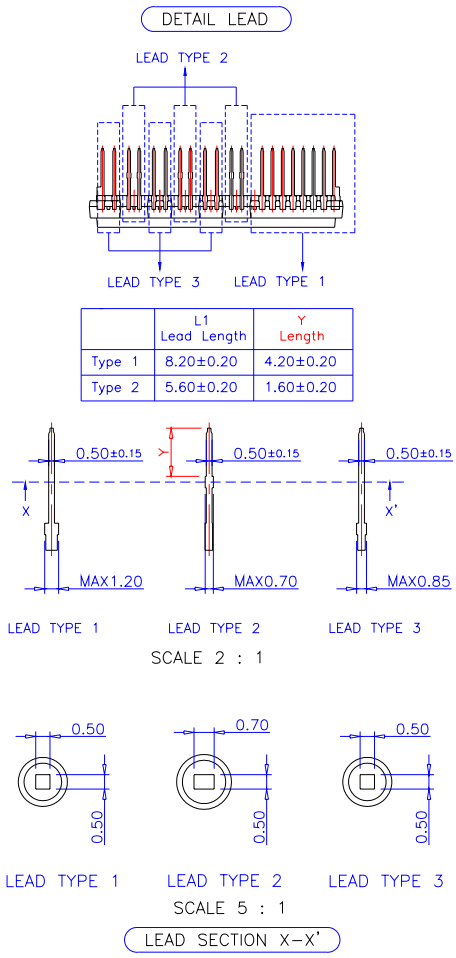

	L1 Lead Length	Y Length
Type 1	8.20±0.20	4.20±0.20
Type 2	5.60±0.20	1.60±0.20

TRADEMARKS

The following are registered and unregistered trademarks Fairchild Semiconductor owns or is authorized to use and is not intended to be an exhaustive list of all such trademarks.

ACEx™
ActiveArray™
Bottomless™
Build it Now™
CoolFET™
CROSSVOLT™
DOME™
EcoSPARK™
E^2CMOS™
EnSigna™
FACT™
FACT Quiet Series™
FAST®
FASTr™
FPS™
FRFET™
GlobalOptoisolator™
GTO™
HiSeC™
I^2C™
i-Lo™
ImpliedDisconnect™
IntelliMAX™
ISOPLANAR™
LittleFET™
MICROCOUPLER™
MicroFET™
MicroPak™
MICROWIRE™
MSX™
MSXPro™
OCX™
OCXPro™
OPTOLOGIC®
OPTOPLANAR™
PACMAN™
POP™
Power247™
PowerEdge™
PowerSaver™
PowerTrench®
QFET®
QS™
QT Optoelectronics™
Quiet Series™
RapidConfigure™
RapidConnect™
µSerDes™
ScalarPump™
SILENT SWITCHER®
SMART START™
SPM™
Stealth™
SuperFET™
SuperSOT™-3
SuperSOT™-6
SuperSOT™-8
SyncFET™
TCM™
TinyLogic®
TINYOPTO™
TruTranslation™
UHC™
UltraFET®
UniFET™
VCX™
Wire™

Across the board. Around the world.™
The Power Franchise®
Programmable Active Droop™

DISCLAIMER

FAIRCHILD SEMICONDUCTOR RESERVES THE RIGHT TO MAKE CHANGES WITHOUT FURTHER NOTICE TO ANY PRODUCTS HEREIN TO IMPROVE RELIABILITY, FUNCTION OR DESIGN. FAIRCHILD DOES NOT ASSUME ANY LIABILITY ARISING OUT OF THE APPLICATION OR USE OF ANY PRODUCT OR CIRCUIT DESCRIBED HEREIN; NEITHER DOES IT CONVEY ANY LICENSE UNDER ITS PATENT RIGHTS, NOR THE RIGHTS OF OTHERS.

LIFE SUPPORT POLICY

FAIRCHILD'S PRODUCTS ARE NOT AUTHORIZED FOR USE AS CRITICAL COMPONENTS IN LIFE SUPPORT DEVICES OR SYSTEMS WITHOUT THE EXPRESS WRITTEN APPROVAL OF FAIRCHILD SEMICONDUCTOR CORPORATION.
As used herein:

1. Life support devices or systems are devices or systems which, (a) are intended for surgical implant into the body, or (b) support or sustain life, or (c) whose failure to perform when properly used in accordance with instructions for use provided in the labeling, can be reasonably expected to result in significant injury to the user.

2. A critical component is any component of a life support device or system whose failure to perform can be reasonably expected to cause the failure of the life support device or system, or to affect its safety or effectiveness.

PRODUCT STATUS DEFINITIONS

Definition of Terms

Datasheet Identification	Product Status	Definition
Advance Information	Formative or In Design	This datasheet contains the design specifications for product development. Specifications may change in any manner without notice.
Preliminary	First Production	This datasheet contains preliminary data, and supplementary data will be published at a later date. Fairchild Semiconductor reserves the right to make changes at any time without notice in order to improve design.
No Identification Needed	Full Production	This datasheet contains final specifications. Fairchild Semiconductor reserves the right to make changes at any time without notice in order to improve design.
Obsolete	Not In Production	This datasheet contains specifications on a product that has been discontinued by Fairchild semiconductor. The datasheet is printed for reference information only.