查询GT-SMD181230022-TR供应商 捷多邦，专业PCB打样工厂，24小时加急出货

UNCONTROLLED DOCUMENT

PART NUMBER	REV.
GT–SMD181230022–TR	A

REV.	E.C.N. NUMBER AND REVISION COMMENTS	DATE
A	E.C.N. #11148.	12.19.06

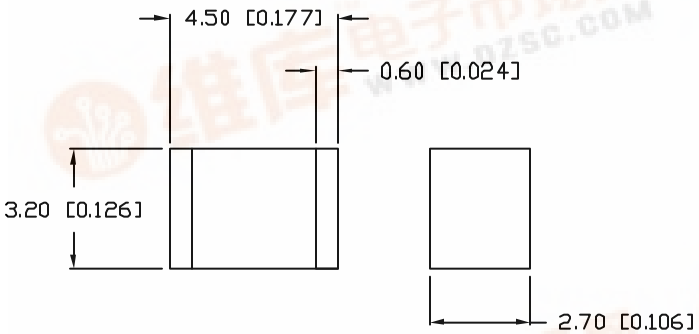

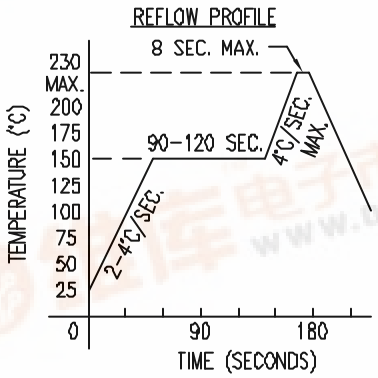

ELECTRICAL SPECIFICATIONS

PARAMETER	VALUE	TEST CONDITION
D.C. FIRING VOLTAGE:	300V±20% D.C.	(dv/dt 100V/S)
IMPULSE CURRENT:	2KA MAX.	(8/20µS)
A.C. DISCHARGE CURRENT:	2A	(50Hz, 9 CYCLES)
INSULATION RESISTANCE:	10^4 MΩ MIN.	50 VDC
INTER–ELECTRODE CAPACITANCE:	1.0 PF MAX.	1.0kHz

ENVIRONMENTAL SPECIFICATIONS PER MIL–STD 202

TEST	METHODE	CONDITION	RATING
VIBRATION TESTING:	204B	C	10–55HZ,.06DA
SHOCK	213A	C	100G
HUMIDITY:	103B	B	95%RE.HUMIDITY
TEMPERATURE CYCLING:	102A	C	– 65 TO + 125 °C
BAROMETRIC PRESSURE:	105C	B	50,000FT.
THERMAL SHOCK:	107	B	– 65 TO + 125 °C
SOLDERABILITY:	20B	B	

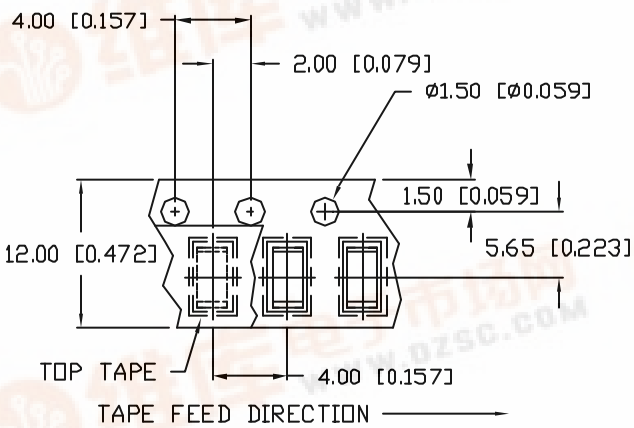

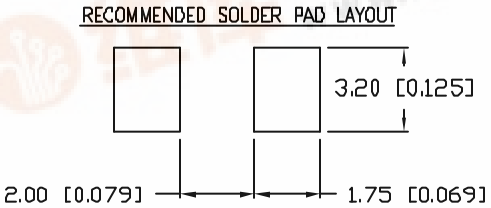

NOTES:

1. 500 PIECES PER REEL.

UNCONTROLLED DOCUMENT

*UNLESS OTHERWISE SPECIFIED TOLERANCES PER DECIMAL PRECISION ARE: X=±1 (±0.038), X.X=±0.5 (±0.020), X.XX=±0.25 (±0.010), X.XXX=±0.127 (±0.005). LEAD SIZE=±0.05 (0.002), LEAD LENGTH=±0.75 (±0.030). MIN= +DECIMAL PRECISION −0.00 MAX.= +0.00 −DECIMAL PRECISION

REV.	PART NUMBER
A	GT–SMD181230022–TR

3.2 x 4.5mm SURFACE MOUNT SURGE,

CONFIDENTIAL INFORMATION

THE INFORMATION CONTAINED IN THIS DOCUMENT IS THE PROPERTY OF LUMEX INC. EXCEPT AS SPECIFICALLY AUTHORIZED IN WRITING BY LUMEX INC., THE HOLDER OF THIS DOCUMENT SHALL KEEP ALL INFORMATION CONTAINED HEREIN CONFIDENTIAL AND SHALL PROTECT SAME IN WHOLE OR IN PART FROM DISCLOSURE AND DISSEMINATION TO ALL THIRD PARTIES.

RELIABILITY NOTE

OUR MANY YEARS OF EXPERIENCE DATA ACCUMULATION INDICATE THAT

290 E. HELEN ROAD
PALATINE, IL 60067–6976
PHONE: +1.847.359.2790
US WEB: www.lumex.com
TW WEB: www.lumex.com.tw

DRAWN BY:	CHECKED BY:	APPROVED BY:	DATE: 12.19.06

找PDF 维库一下 pdf.dzsc.com