查询V30120S供应商 捷多邦，专业PCB打样工厂，24小时加急出货

High-Voltage Trench MOS Barrier Schottky Rectifier

Ultra Low V_F = 0.402 V at I_F = 5 A

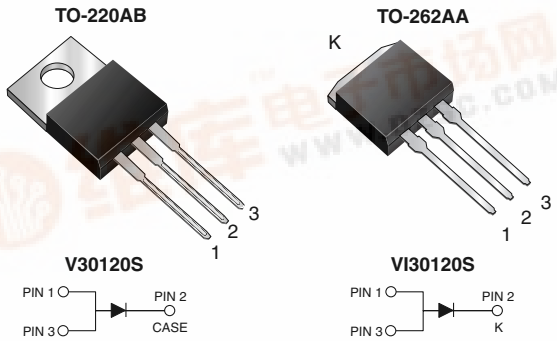

FEATURES

- Trench MOS Schottky Technology
- Low forward voltage drop, low power losses
- High efficiency operation
- Low thermal resistance
- Solder Dip 260 °C, 40 seconds
- Component in accordance to RoHS 2002/95/EC and WEEE 2002/96/EC

TYPICAL APPLICATIONS

For use in high frequency inverters, switching power supplies, free-wheeling diodes, Oring diode, dc-to-dc converters and reverse battery protection.

MAJOR RATINGS AND CHARACTERISTICS	
$I_{F(AV)}$	30 A
V_{RRM}	120 V
I_{FSM}	300 A
V_F at I_F = 30 A	0.70 V
T_j max.	150 °C

MECHANICAL DATA

Case: TO-220AB & TO-262AA

Epoxy meets UL 94V-0 flammability rating

Terminals: Matte tin plated leads, solderable per J-STD-002B and JESD22-B102D

E3 suffix for commercial grade

Polarity: As marked

Mounting Torque: 10 in-lbs maximum

MAXIMUM RATINGS (T_A = 25 °C unless otherwise noted)

PARAMETER	SYMBOL	V30120S	VI30120S	UNIT
Maximum repetitive peak reverse voltage	V_{RRM}	120		V
Maximum average forward rectified current (see Fig. 1)	$I_{F(AV)}$	30		A
Peak forward surge current 8.3 ms single half sine-wave superimposed on rated load	I_{FSM}	300		A
Peak repetitive reverse current per leg at t_p = 2 µs, 1 kHz	I_{RRM}	1.0		A
Voltage rate of change (rated V_R)	dv/dt	10000		V/µs
Operating junction and storage temperature range	T_J, T_{STG}	- 20 to + 150		°C

ELECTRICAL CHARACTERISTICS (T_A = 25 °C unless otherwise noted)

PARAMETER	TEST CONDITIONS	SYMBOL	TYP.	MAX.	UNIT
Breakdown voltage	at I_R = 1.0 mA T_j = 25 °C	$V_{(BR)}$	120 (minimum)	-	V
Instantaneous forward voltage (1)	at I_F = 5 A, I_F = 15 A, I_F = 30 A, T_j = 25 °C	V_F	0.478 0.648 0.854	- - 0.95	V
	at I_F = 5 A, I_F = 15 A, I_F = 30 A, T_j = 125 °C		0.402 0.582 0.698	- - 0.75	

找PDF 维库一下 pdf.dzsc.com

ELECTRICAL CHARACTERISTICS (T_A = 25 °C unless otherwise noted)					
PARAMETER	**TEST CONDITIONS**	**SYMBOL**	**TYP.**	**MAX.**	**UNIT**
Reverse current [1]	at V_R = 90 V, T_j = 25 °C	I_R	14.2	-	µA
	at V_R = 90 V, T_j = 125 °C		11.3	-	mA
	at V_R = 120 V, T_j = 25 °C		47.3	500	µA
	at V_R = 120 V, T_j = 125 °C		23.5	35	mA

Note:

(1) Pulse test: 300 µs pulse width, 1 % duty cycle

THERMAL CHARACTERISTICS (T_A = 25 °C unless otherwise noted)				
PARAMETER	**SYMBOL**	**V30120S**	**VI30120S**	**UNIT**
Typical thermal resistance	$R_{\theta JC}$	2.2		°C/W

ORDERING INFORMATION					
PACKAGE	**PREFERRED P/N**	**UNIT WEIGHT (g)**	**PACKAGE CODE**	**BASE QUANTITY**	**DELIVERY MODE**
TO-220AB	V30120S-E3/45	1.884	45	50/Tube	Tube
TO-262AA	VI30120S-E3/4W	1.456	4W	50/Tube	Tube

RATINGS AND CHARACTERISTICS CURVES

(T_A = 25 °C unless otherwise noted)

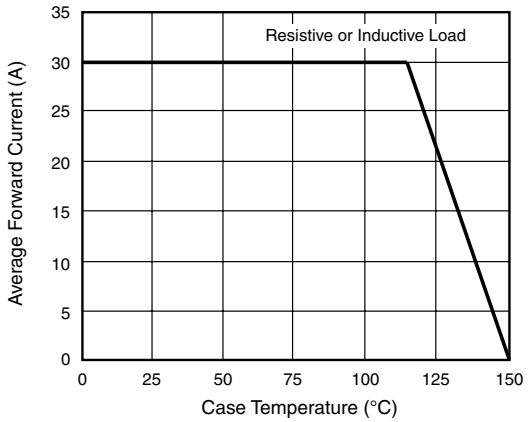

Figure 1. Forward Current Derating Curve

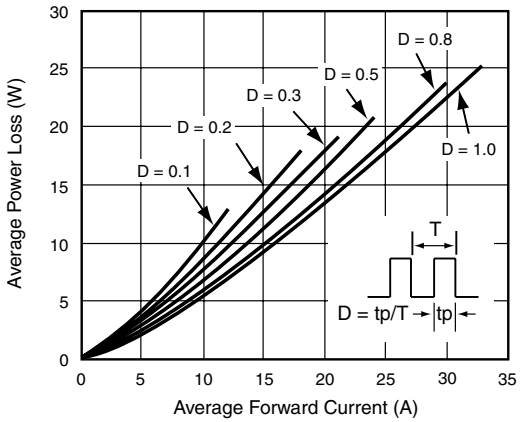

Figure 2. Forward Power Loss Characteristics

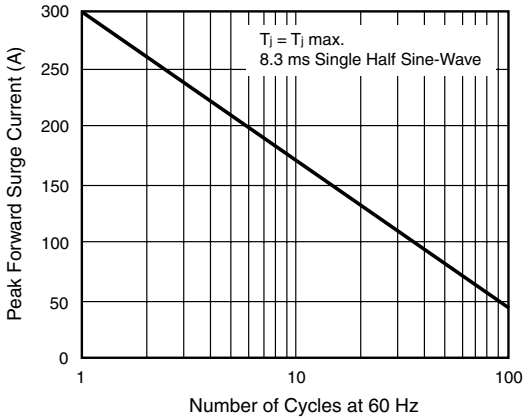

Figure 3. Maximum Non-Repetitive Peak Forward Surge Current

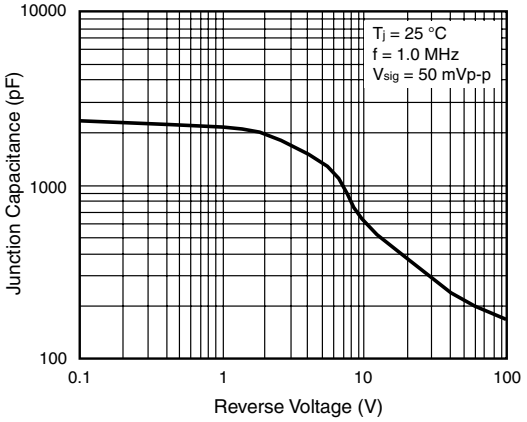

Figure 6. Typical Junction Capacitance

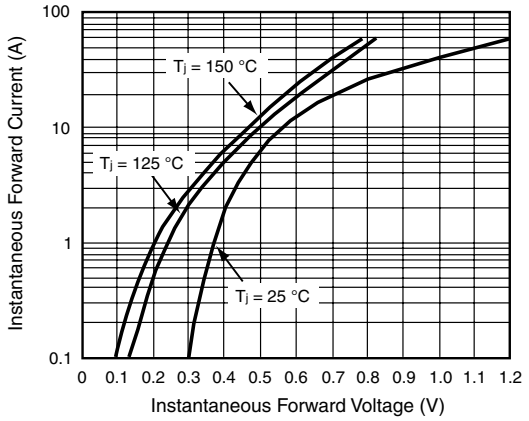

Figure 4. Typical Instantaneous Forward Characteristics

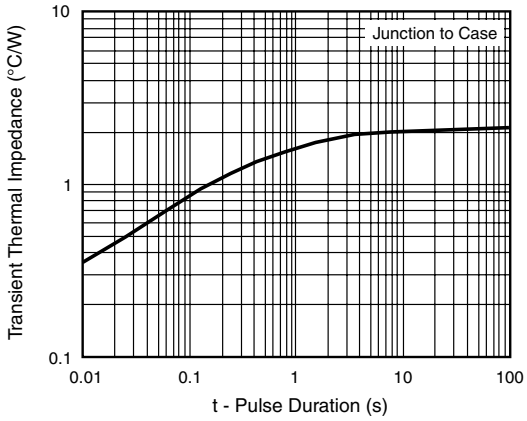

Figure 7. Typical Transient Thermal Impedance

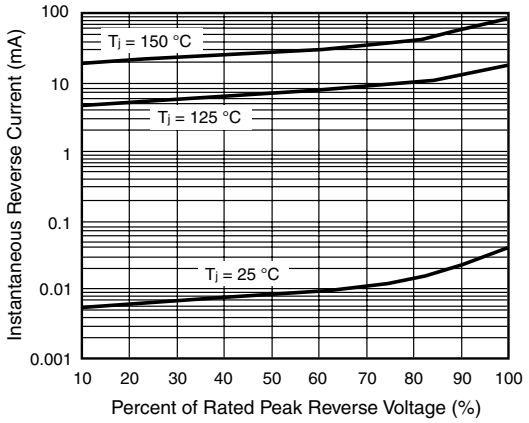

Figure 5. Typical Reverse Leakage Characteristics

PACKAGE OUTLINE DIMENSIONS in inches (millimeters)

TO-220AB

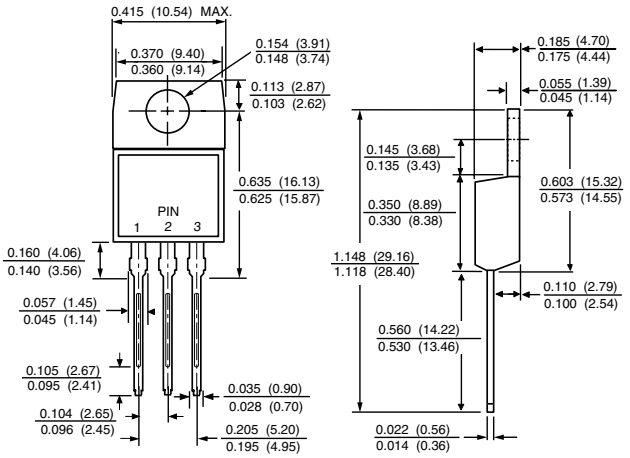

TO-262AA

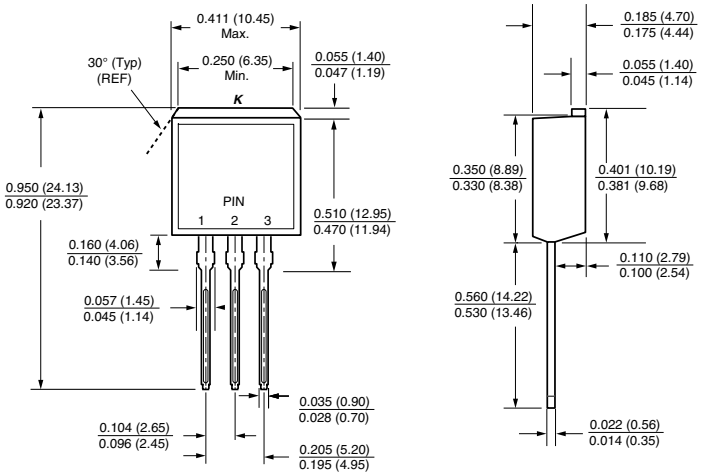

Notice

Specifications of the products displayed herein are subject to change without notice. Vishay Intertechnology, Inc., or anyone on its behalf, assumes no responsibility or liability for any errors or inaccuracies.

Information contained herein is intended to provide a product description only. No license, express or implied, by estoppel or otherwise, to any intellectual property rights is granted by this document. Except as provided in Vishay's terms and conditions of sale for such products, Vishay assumes no liability whatsoever, and disclaims any express or implied warranty, relating to sale and/or use of Vishay products including liability or warranties relating to fitness for a particular purpose, merchantability, or infringement of any patent, copyright, or other intellectual property right.

The products shown herein are not designed for use in medical, life-saving, or life-sustaining applications. Customers using or selling these products for use in such applications do so at their own risk and agree to fully indemnify Vishay for any damages resulting from such improper use or sale.