查询200D_05供应商 捷多邦，专业PCB打样工厂，24小时加急出货

Wet Tantalum Capacitors
Wet Sintered Anode TANTALEX® Components
TANTAPAK® Capacitor Assemblies

FEATURES

TANTAPAK® Wet Sintered Anode capacitor assemblies are widely used in filter, coupling, bypass and time-delay circuits in computers, missiles, airborne equipment, radar and fire control systems.

TANTAPAK® capacitor assemblies are available in 3 standard case styles and 13 case codes. Type 200D units are constructed with the negative terminal connected to the case; they are available only in the "A" case, in five case codes. Model 202D capacitors are the commercial equivalent of Tansitor Style RW, Mallory-NACC Style TL and are designed to meet MIL-DTL-3965 and DSCC DWG 04021.

PERFORMANCE CHARACTERISTICS

Operating Temperature: - 55 °C to + 125 °C.

Capacitance Tolerance: At 120 Hz, + 25 °C. ± 20 % standard. ± 10 % available.

DC Leakage Current (DCL Max.):

At + 25 °C: Leakage current shall not exceed the values listed in the Standard Ratings Tables.

Life Test: Capacitors shall withstand 2000 hours at a temperature of + 85 °C or + 125 °C at the rated DC working voltage.

Following the life test:

1. DCL shall not exceed the original requirement.
2. ESR shall not be more than 130 % of the initial requirement.
3. Capacitance shall not change more than ± 25 %.

ORDERING INFORMATION

202D	318	X0	006	A1
MODEL	CAPACITANCE	CAPACITANCE TOLERANCE	DC VOLTAGE RATING AT + 85 °C	CASE CODE
200D = Negative terminal connected to case (Available only in 'A' Cases) 202D = Both terminals insulated from case	This is expressed in picofarads. The first two digits are the significant figures. The third is the number of zeros to follow	X0 = ± 20 % X9 = ± 10 %	This is expressed in volts. To complete the three-digit block, zeros precede the voltage rating	See Dimensional Configurations

DIMENSIONS in inches [millimeters]

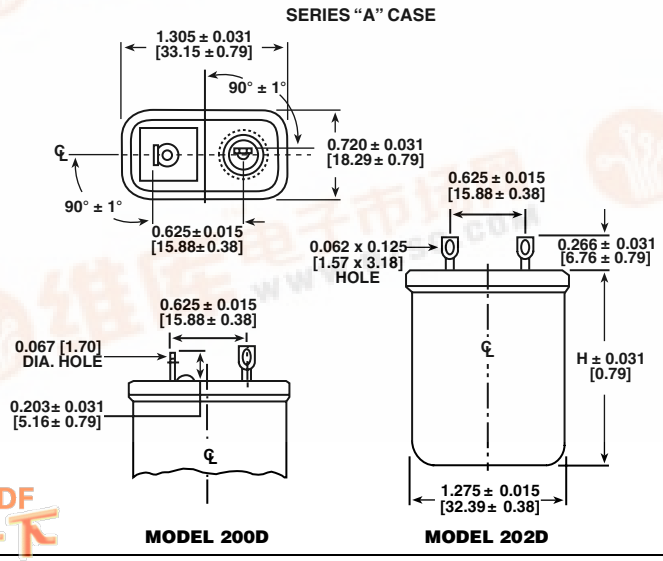

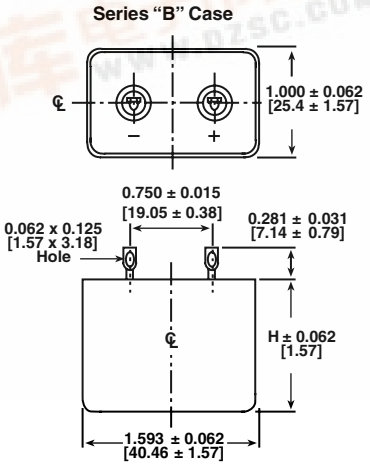

找PDF 维库一下 pdf.dzsc.com

Wet Tantalum Capacitors
Wet Sintered Anode TANTALEX® Components
TANTAPAK® Capacitor Assemblies

DIMENSIONS in inches [millimeters]

Series "D" Case

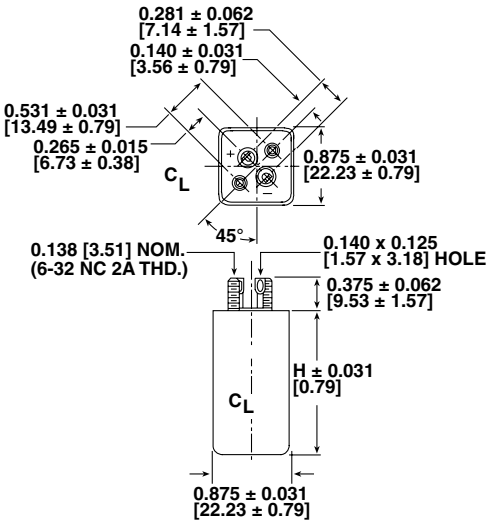

CASE CODE	H CASE HEIGHT	TYPICAL WEIGHT (g)
A1	1.062 [26.97]	45
A2	1.375 [34.93]	60
A3	1.625 [41.28]	80
A4	2.000 [50.80]	100
A5	2.500 [63.50]	125
B1	1.500 [38.10]	170
B2	1.875 [47.63]	210
B3	2.250 [57.15]	250
B4	2.625 [66.68]	290
B5	3.000 [76.20]	335
B6	3.375 [85.73]	380
B7	3.750 [95.25]	420
D3	1.625 [41.28]	120

STANDARD RATINGS

CAPACITANCE (µF)	CASE CODE	PART NUMBER (1) TYPE 200D	PART NUMBER (1) TYPE 202D	MAX. ESR at + 25 °C (Ω)	MAX. IMP. at - 55 °C (Ω)	MAX. RMS RIPPLE 120 Hz (A)
15 WVDC at + 85 °C . . . 10 WVDC at + 125 °C						
960.0	A1	200D967X0015A1	202D967X0015A1	0.25	3.1	1.17
1200.0	A2	200D128X0015A2	202D128X0015A2	0.21	2.3	1.45
1400.0	A3	200D148X0015A3	202D148X0015A3	0.18	1.7	1.67
1600.0	A1	200D168X0015A1	202D168X0015A1	0.25	4.2	1.20
2100.0	A2	200D218X0015A2	202D218X0015A2	0.19	3.1	1.52
2100.0	A4	200D218X0015A4	202D218X0015A4	0.12	1.3	2.22
2200.0	D3	-	202D228X0015D3	0.30	5.8	1.14
2400.0	A5	200D248X0015A5	202D248X0015A5	0.10	1.15	2.66
2700.0	A3	200D278X0015A3	202D278X0015A3	0.15	2.5	1.83
3200.0	A4	200D328X0015A4	202D328X0015A4	0.13	2.1	2.13
3300.0	B1	-	202D338X0015B1	0.14	3.2	2.17
4300.0	A5	200D438X0015A5	202D438X0015A5	0.095	1.6	2.73
4500.0	B2	-	202D458X0015B2	0.11	2.4	2.65
5600.0	B3	-	202D568X0015B3	0.085	1.9	3.24
6700.0	B4	-	202D678X0015B4	0.070	1.6	3.80
7800.0	B5	-	202D788X0015B5	0.061	1.4	4.28
9000.0	B6	-	202D908X0015B6	0.053	1.2	4.84
10 000.0	B7	-	202D109X0015B7	0.047	1.1	5.38
20 WVDC at + 85 °C . . . 13 WVDC at + 125 °C						
1300.0	A1	200D138X0020A1	202D138X0020A1	0.25	5.0	1.20
1700.0	A2	200D178X0020A2	202D178X0020A2	0.19	3.8	1.52
1900.0	D3	-	202D198X0020D3	0.21	5.0	1.36
2200.0	A3	200D228X0020A3	202D228X0020A3	0.15	3.0	1.83
2700.0	A4	200D278X0020A4	202D278X0020A4	0.13	2.5	2.13
2800.0	B1	-	202D288X0020B1	0.14	3.3	2.17
3500.0	A5	200D358X0020A5	202D358X0020A5	0.094	1.9	2.75
3800.0	B2	-	202D388X0020B2	0.11	2.5	2.65
4700.0	B3	-	202D478X0020B3	0.085	2.0	3.24
5600.0	B4	-	202D568X0020B4	0.071	1.7	3.77
6600.0	B5	-	202D668X0020B5	0.061	1.4	4.28
7500.0	B6	-	202D758X0020B6	0.053	1.3	4.84
8500.0	B7	-	202D858X0020B7	0.047	1.1	5.38

Note

(1) The Part Numbers listed are for ± 20 % tolerance. To specify ± 10 % tolerance, change the digit following "X" from "0" to "9". For requirements or ratings other than those listed, please contact a Vishay representative.

STANDARD RATINGS						
CAPACITANCE (µF)	CASE CODE	PART NUMBER [1] TYPE 200D	PART NUMBER [1] TYPE 202D	MAX. ESR at + 25 °C (Ω)	MAX. IMP. at - 55 °C (Ω)	MAX. RMS RIPPLE 120 Hz (A)
25 WVDC at + 85 °C . . . 15 WVDC at + 125 °C						
1100.0	A1	200D118X0025A1	202D118X0025A1	0.30	5.3	1.10
1400.0	A2	200D148X0025A2	202D148X0025A2	0.23	4.0	1.38
1600.0	D3	-	202D168X0025D3	0.21	5.3	1.36
1800.0	A3	200D188X0025A3	202D188X0025A3	0.18	3.2	1.67
2200.0	A4	200D228X0025A4	202D228X0025A4	0.15	2.7	1.98
2300.0	B1	-	202D238X0025B1	0.14	3.5	2.17
2900.0	A5	200D298X0025A5	202D298X0025A5	0.11	2.0	2.54
3100.0	B2	-	202D318X0025B2	0.11	2.6	2.65
3900.0	B3	-	202D398X0025B3	0.085	2.1	3.24
4700.0	B4	-	202D478X0025B4	0.071	1.8	3.77
5500.0	B5	-	202D558X0025B5	0.061	1.5	4.28
6200.0	B6	-	202D628X0025B6	0.053	1.3	4.84
7000.0	B7	-	202D708X0025B7	0.047	1.2	5.38
30 WVDC at + 85 °C . . . 20 WVDC at + 125 °C						
520.0	A1	200D527X0030A1	202D527X0030A1	0.48	5.3	0.87
660.0	A2	200D667X0030A2	202D667X0030A2	0.38	4.2	1.08
820.0	A3	200D827X0030A3	202D827X0030A3	0.31	2.9	1.27
900.0	A1	200D907X0030A1	202D907X0030A1	0.37	5.8	0.99
1200.0	A2	200D128X0030A2	202D128X0030A2	0.27	4.4	1.28
1200.0	A4	200D128X0030A4	202D128X0030A4	0.21	2.3	1.68
1300.0	A5	200D138X0030A5	202D138X0030A5	0.19	2.1	1.93
1300.0	D3	-	202D138X0030D3	0.26	5.5	1.22
1500.0	A3	200D158X0030A3	202D158X0030A3	0.22	3.5	1.50
1800.0	A4	200D188X0030A4	202D188X0030A4	0.18	2.9	1.81
2000.0	B1	-	202D208X0030B1	0.17	1.7	1.97
2400.0	A5	200D248X0030A5	202D248X0030A5	0.14	2.2	2.25
2600.0	B2	-	202D268X0030B2	0.13	2.8	2.43
3300.0	B3	-	202D338X0030B3	0.10	2.2	2.98
4000.0	B4	-	202D408X0030B4	0.085	1.8	3.45
4600.0	B5	-	202D468X0030B5	0.073	1.6	3.92
5300.0	B6	-	202D538X0030B6	0.064	1.4	4.40
6000.0	B7	-	202D608X0030B7	0.057	1.2	4.88
35 WVDC at + 85 °C . . . 22 WVDC at + 125 °C						
720.0	A1	200D727X0035A1	202D727X0035A1	0.37	6.3	0.99
960.0	A2	200D967X0035A2	202D967X0035A2	0.27	4.7	1.28
1100.0	D3	-	202D118X0035D3	0.30	5.7	1.14
1200.0	A3	200D128X0035A3	202D128X0035A3	0.22	3.8	1.51
1400.0	A4	200D148X0035A4	202D148X0035A4	0.18	3.2	1.81
1600.0	B1	-	202D168X0035B1	0.20	3.8	1.82
1900.0	A5	200D198X0035A5	202D198X0035A5	0.14	2.4	2.25
2200.0	B2	-	202D228X0035B2	0.15	2.9	2.27
2700.0	B3	-	202D278X0035B3	0.12	2.3	2.72
3200.0	B4	-	202D328X0035B4	0.10	1.9	3.18
3800.0	B5	-	202D388X0035B5	0.085	1.6	3.63
4300.0	B6	-	202D438X0035B6	0.075	1.4	4.07
4900.0	B7	-	202D498X0035B7	0.067	1.3	4.51

Note

[1] The Part Numbers listed are for ± 20 % tolerance. To specify ± 10 % tolerance, change the digit following “X” from “0” to “9”. For requirements or ratings other than those listed, please contact a Vishay representative.

Wet Tantalum Capacitors
Wet Sintered Anode TANTALEX® Components
TANTAPAK® Capacitor Assemblies

STANDARD RATINGS

CAPACITANCE (µF)	CASE CODE	PART NUMBER (1) TYPE 200D	PART NUMBER (1) TYPE 202D	MAX. ESR at + 25 °C (Ω)	MAX. IMP. at - 55 °C (Ω)	MAX. RMS RIPPLE 120 Hz (A)
40 WVDC at + 85 °C . . . 25 WVDC at + 125 °C						
600.0	A1	200D607X0040A1	202D607X0040A1	0.33	6.7	1.04
800.0	A2	200D807X0040A2	202D807X0040A2	0.25	5.0	1.33
880.0	D3	-	202D887X0040D3	0.30	6.0	1.14
1000.0	A3	200D108X0040A3	202D108X0040A3	0.20	4.0	1.58
1200.0	A4	200D128X0040A4	202D128X0040A4	0.17	3.3	1.86
1300.0	B1	-	202D138X0040B1	0.20	4.0	1.82
1600.0	A5	200D168X0040A5	202D168X0040A5	0.13	2.5	2.34
1800.0	B2	-	202D188X0040B2	0.15	3.0	2.27
2200.0	B3	-	202D228X0040B3	0.12	2.4	2.72
2600.0	B4	-	202D268X0040B4	0.10	2.0	3.18
3100.0	B5	-	202D318X0040B5	0.086	1.7	3.61
3500.0	B6	-	202D358X0040B6	0.075	1.5	4.07
4000.0	B7	-	202D408X0040B7	0.057	1.3	4.51
50 WVDC at + 85 °C . . . 35 WVDC at + 125 °C						
400.0	A1	200D407X0050A1	202D407X0050A1	0.50	7.2	0.85
430.0	A1	200D437X0050A1	202D437X0050A1	0.58	6.4	0.79
490.0	A1	200D497X0050A1	202D497X0050A1	0.33	7.2	1.04
500.0	A2	200D507X0050A2	202D507X0050A2	0.40	5.6	1.05
600.0	A3	200D607X0050A3	202D607X0050A3	0.33	4.1	1.23
660.0	A2	200D667X0050A2	202D667X0050A2	0.25	5.4	1.33
720.0	D3	-	202D727X0050D3	0.30	6.2	1.14
800.0	A4	200D807X0050A4	202D807X0050A4	0.25	3.1	1.54
820.0	A3	200D827X0050A3	202D827X0050A3	0.20	4.3	1.58
980.0	A4	200D987X0050A4	202D987X0050A4	0.17	3.6	1.86
1000.0	A5	200D108X0050A5	202D108X0050A5	0.25	2.8	2.84
1100.0	B1	-	202D118X0050B1	0.20	4.2	1.82
1300.0	A5	200D138X0050A5	202D138X0050A5	0.13	2.7	2.34
1400.0	B2	-	202D148X0050B2	0.15	3.1	2.27
1800.0	B3	-	202D188X0050B3	0.12	2.5	2.72
2200.0	B4	-	202D228X0050B4	0.10	2.0	3.18
2500.0	B5	-	202D258X0050B5	0.086	1.8	3.61
2900.0	B6	-	202D298X0050B6	0.075	1.6	4.07
3200.0	B7	-	202D328X0050B7	0.067	1.4	4.51
60 WVDC at + 85 °C . . . 40 WVDC at + 125 °C						
410.0	A1	200D417X0060A1	202D417X0060A1	0.33	7.5	1.04
550.0	A2	200D557X0060A2	202D557X0060A2	0.25	5.6	1.33
600.0	D3	-	202D607X0060A2	0.33	6.5	1.09
680.0	A3	200D687X0060A3	202D687X0060A3	0.20	4.5	1.58
820.0	A4	200D827X0060A4	202D827X0060A4	0.17	3.7	1.86
900.0	B1	-	202D907X0060A2	0.22	4.3	1.73
1100.0	A5	200D118X0060A5	202D118X0060A5	0.13	2.8	2.34
1200.0	B2	-	202D128X0060B2	0.16	3.3	2.19
1500.0	B3	-	202D158X0060B3	0.13	2.6	2.62
1800.0	B4	-	202D188X0060B4	0.11	2.2	3.03
2100.0	B5	-	202D218X0060B4	0.093	1.9	3.47
2400.0	B6	-	202D248X0060B6	0.081	1.6	3.9
2700.0	B7	-	202D278X0060B7	0.072	1.4	4.35

Note

(1) The Part Numbers listed are for ± 20 % tolerance. To specify ± 10 % tolerance, change the digit following “X” from “0” to “9”. For requirements or ratings other than those listed, please contact a Vishay representative.

STANDARD RATINGS

CAPACITANCE (µF)	CASE CODE	PART NUMBER [1] TYPE 200D	PART NUMBER [1] TYPE 202D	MAX. ESR at + 25 °C (Ω)	MAX. IMP. at - 55 °C (Ω)	MAX. RMS RIPPLE 120 Hz (A)
75 WVDC at + 85 °C . . . 50 WVDC at + 125 °C						
270.0	A1	200D277X0075A1	202D277X0075A1	0.56	8.5	0.80
330.0	A2	200D337X0075A2	202D337X0075A2	0.46	7.0	0.98
400.0	A1	200D407X0075A1	202D407X0075A1	0.26	7.5	1.18
400.0	A3	200D407X0075A3	202D407X0075A3	0.38	5.0	1.15
530.0	A2	200D537X0075A2	202D537X0075A2	0.20	5.6	1.48
480.0	D3	-	202D487X0075D3	0.42	6.8	0.96
660.0	A3	200D667X0075A3	202D667X0075A3	0.16	4.5	1.77
600.0	A4	200D607X0075A4	202D607X0075A4	0.25	3.65	1.54
660.0	A5	200D667X0075A5	202D667X0075A5	0.23	3.5	1.76
790.0	A4	200D797X0075A4	202D797X0075A4	0.13	3.7	2.13
720.0	B1	-	202D727X0075B1	0.28	4.5	1.54
110.0	A5	200D118X0075A5	202D118X0075A5	0.096	2.8	2.72
960.0	B2	-	202D967X0075B2	0.21	3.4	1.91
1200.0	B3	-	202D128X0075B3	0.17	2.7	2.29
1400.0	B4	-	202D148X0075B4	0.14	2.1	2.69
1700.0	B5	-	202D178X0075B5	0.12	1.9	3.06
1900.0	B6	-	202D198X0075B6	0.11	1.7	3.36
2200.0	B7	-	202D228X0075B7	0.095	1.5	3.78
85 WVDC at + 85 °C . . . 60 WVDC at + 125 °C						
280.0	A1	200D287X0085A1	202D287X0085A1	0.33	9.2	1.04
370.0	A2	200D377X0085A2	202D377X0085A2	0.25	6.9	1.33
400.0	D3	-	202D407X0085D3	0.42	7.0	0.96
470.0	A3	200D477X0085A3	202D477X0085A3	0.20	5.5	1.58
570.0	A4	200D577X0085A4	202D577X0085A4	0.17	4.6	1.86
600.0	B1	-	202D607X0085B1	0.28	4.7	1.54
750.0	A5	200D757X0085A5	202D757X0085A5	0.13	3.4	2.34
85 WVDC at + 85 °C . . . 60 WVDC at + 125 °C						
800.0	B2	-	202D807X0085B2	0.21	3.5	1.91
1000.0	B3	-	202D108X0085B3	0.17	2.8	2.29
1200.0	B4	-	202D128X0085B4	0.14	2.4	2.69
1400.0	B5	-	202D148X0085B5	0.12	2.0	3.06
1600.0	B6	-	202D168X0085B6	0.11	1.8	3.36
1800.0	B7	-	202D188X0085B7	0.095	1.6	3.78

Note

[1] The Part Numbers listed are for ± 20 % tolerance. To specify ± 10 % tolerance, change the digit following “X” from “0” to “9”. For requirements or ratings other than those listed, please contact a Vishay representative.

Wet Tantalum Capacitors
Wet Sintered Anode TANTALEX® Components
TANTAPAK® Capacitor Assemblies

STANDARD RATINGS

CAPACITANCE (µF)	CASE CODE	PART NUMBER [1] TYPE 200D	PART NUMBER [1] TYPE 202D	MAX. ESR at + 25 °C (Ω)	MAX. IMP. at - 55 °C (Ω)	MAX. RMS RIPPLE 120 Hz (A)
85 WVDC at + 85 °C . . . 60 WVDC at + 125 °C						
280.0	A1	200D287X0085A1	202D287X0085A1	0.33	9.2	1.04
370.0	A2	200D377X0085A2	202D377X0085A2	0.25	6.9	1.33
400.0	D3	-	202D407X0085D3	0.42	7.0	0.96
470.0	A3	200D477X0085A3	202D477X0085A3	0.20	5.5	1.58
570.0	A4	200D577X0085A4	202D577X0085A4	0.17	4.6	1.86
600.0	B1	-	202D607X0085B1	0.28	4.7	1.54
750.0	A5	200D757X0085A5	202D757X0085A5	0.13	3.4	2.34
800.0	B2	-	202D807X0085B2	0.21	3.5	1.91
1000.0	B3	-	202D108X0085B3	0.17	2.8	2.29
1200.0	B4	-	202D128X0085B4	0.14	2.4	2.69
1400.0	B5	-	202D148X0085B5	0.12	2.0	3.06
1600.0	B6	-	202D168X0085B6	0.11	1.8	3.36
1800.0	B7	-	202D188X0085B7	0.095	1.6	3.78
100 WVDC at + 85 °C . . . 70 WVDC at + 125 °C						
170.0	A1	200D177X0100A1	202D177X0100A1	0.94	15.0	0.62
220.0	A2	200D227X0100A2	202D227X0100A2	0.72	11.6	0.78
260.0	A1	200D267X0100A1	202D267X0100A1	0.40	8.3	0.95
260.0	A3	200D267X0100A3	202D267X0100A3	0.61	8.0	0.91
340.0	D3	-	202D347X0100D3	0.75	7.5	0.72
350.0	A2	200D357X0100A2	202D357X0100A2	0.30	6.2	1.21
350.0	A4	200D357X0100A4	202D357X0100A4	0.45	6.5	1.15
440.0	A3	200D447X0100A3	202D447X0100A3	0.24	5.0	1.44
440.0	A5	200D447X0100A5	202D447X0100A5	0.36	5.8	1.40
510.0	B1	-	202D517X0100B1	0.28	4.8	1.54
530.0	A4	200D537X0100A4	202D537X0100A4	0.20	4.2	1.72
680.0	B2	-	202D687X0100B2	0.21	3.6	1.91
700.0	A5	200D707X0100A5	202D707X0100A5	0.15	3.1	2.18
850.0	B3	-	202D857X0100B3	0.17	2.9	2.29
1000.0	B4	-	202D108X0100B4	0.14	2.4	2.69
1200.0	B5	-	202D128X0100B5	0.12	2.1	3.06
1400.0	B6	-	202D148X0100B6	0.11	1.8	3.36
1500.0	B7	-	202D158X0100B7	0.095	1.6	3.78
125 WVDC at + 85 °C . . . 80 WVDC at + 125 °C						
170.0	A1	200D177X0125A1	202D177X0125A1	0.40	15.0	0.95
220.0	A2	200D227X0125A2	202D227X0125A2	0.30	12.0	1.21
220.0	D3	-	202D227X0125D3	0.42	8.0	0.96
280.0	A3	200D287X0125A3	202D287X0125A3	0.24	9.0	1.44
340.0	A4	200D347X0125A4	202D347X0125A4	0.20	7.5	1.72
340.0	B1	-	202D347X0125B1	0.28	5.4	1.54
560.0	B3	-	202D567X0125B3	0.17	3.2	2.29
670.0	B4	-	202D677X0125B4	0.14	2.7	2.69
790.0	B5	-	202D797X0125B5	0.12	2.4	3.06
900.0	B6	-	202D907X0125B6	0.11	2.0	3.38
1000.0	B7	-	202D108X0125B7	0.095	1.8	3.78
150 WVDC at + 85 °C . . . 100 WVDC at + 125 °C						
70.0	A1	200D706X0150A1	202D706X0150A1	2.27	28.8	0.40
90.0	A2	200D906X0150A2	202D906X0150A2	1.77	22.4	0.50
100.0	A3	200D107X0150A3	202D107X0150A3	1.59	16.4	0.56
140.0	A4	200D147X0150A4	202D147X0150A4	1.14	12.4	0.72
180.0	A5	200D187X0150A5	202D187X0150A5	0.88	11.2	0.90

Note

[1] The Part Numbers listed are for ± 20 % tolerance. To specify ± 10 % tolerance, change the digit following "X" from "0" to "9". For requirements or ratings other than those listed, please contact a Vishay representative.

EXTENDED RATINGS

CAPACITANCE (µF)	CASE CODE	PART NUMBER [1] TYPE 200D	PART NUMBER [1] TYPE 202D	MAX. ESR at + 25 °C (Ω)	MAX. IMP. at - 55 °C (Ω)	MAX. RMS RIPPLE 120 Hz (A)
6 WVDC at + 85 °C . . . 4 WVDC at + 125 °C						
6600.0	A1	200D668X0006A1	202D668X0006A1	0.28	2.3	1.13
8200.0	A2	200D828X0006A2	202D828X0006A2	0.22	1.8	1.41
9900.0	A3	200D998X0006A3	202D998X0006A3	0.18	1.5	1.67
12 000.0	B1	-	202D129X0006B1	0.11	0.90	2.54
13 000.0	A4	200D139X0006A4	202D139X0006A4	0.14	1.1	2.05
15 000.0	A5	-	202D159X0006A5	0.12	1.8	2.35
8 WVDC at + 85 °C . . . 5 WVDC at + 125 °C						
5400.0	A1	200D548X0008A1	202D548X0008A1	0.28	2.8	1.13
6800.0	A2	200D688X0008A2	202D688X0008A2	0.22	2.2	1.41
8200.0	A3	200D828X0008A3	202D828X0008A3	0.18	1.8	1.67
9600.0	B1	-	202D968X0008B1	0.12	1.8	2.54
11000.0	A4	200D119X0008A4	202D119X0008A4	0.14	1.4	2.05
12 000.0	B2	-	202D129X0008B2	0.086	1.3	2.99
14 000.0	A5	200D149X0008A5	202D149X0008A5	0.11	1.1	2.35
10 WVDC at + 85 °C . . . 7 WVDC at + 125 °C						
4500.0	A1	200D458X0010A1	202D458X0010A1	0.28	3.4	1.13
5600.0	A2	200D568X0010A2	202D568X0010A2	0.22	2.7	1.41
6800.0	A3	200D688X0010A3	202D688X0010A3	0.18	2.2	1.67
9000.0	A4	200D908X0010A4	202D908X0010A4	0.14	1.7	2.05
9600.0	B1	-	202D968X0010B1	0.12	1.8	2.54
11 000.0	A5	200D119X0010A5	202D119X0010A5	0.11	1.4	2.35
15 WVDC at + 85 °C . . . 10 WVDC at + 125 °C						
3100.0	A1	200D318X0015A1	202D318X0015A1	0.28	3.9	1.13
3900.0	A2	200D398X0015A2	202D398X0015A2	0.22	3.1	1.41
4700.0	A3	200D478X0015A3	202D478X0015A3	0.18	2.6	1.67
6200.0	A4	200D628X0015A4	202D628X0015A4	0.14	1.9	2.05
6560.0	B1	-	202D668X0015B1	0.16	2.2	2.03
7800.0	A5	200D788X0015A5	202D788X0015A5	0.11	1.6	2.54
20 WVDC at + 85 °C . . . 13 WVDC at + 125 °C						
2600.0	A1	200D268X0020A1	202D268X0020A1	0.28	3.9	1.13
3300.0	A2	200D338X0020A2	202D338X0020A2	0.22	3.1	1.41
4000.0	A3	200D408X0020A3	202D408X0020A3	0.18	2.6	1.67
5300.0	A4	200D538X0020A4	202D538X0020A4	0.14	1.9	2.05
6600.0	A5	200D668X0020A5	202D668X0020A5	0.11	1.6	2.54
25 WVDC at + 85 °C . . . 15 WVDC at + 125 °C						
2200.0	A1	200D228X0025A1	202D228X0025A1	0.28	4.1	1.13
2700.0	A2	200D278X0025A2	202D278X0025A2	0.22	3.3	1.41
3200.0	A3	200D328X0025A3	202D328X0025A3	0.18	2.8	1.67
4300.0	A4	200D438X0025A4	202D438X0025A4	0.14	2.1	2.05
5400.0	A5	200D548X0025A5	202D548X0025A5	0.11	1.7	2.54

Note

[1] The Part Numbers listed are for ± 20 % tolerance. To specify ± 10 % tolerance, change the digit following “X” from “0” to “9”. For requirements or ratings other than those listed, please contact a Vishay representative.

Wet Tantalum Capacitors
Wet Sintered Anode TANTALEX® Components
TANTAPAK® Capacitor Assemblies

EXTENDED RATINGS

CAPACITANCE (μF)	CASE CODE	PART NUMBER (1) TYPE 200D	PART NUMBER (1) TYPE 202D	MAX. ESR at + 25 °C (Ω)	MAX. IMP. at - 55 °C (Ω)	MAX. RMS RIPPLE 120 Hz (A)
30 WVDC at + 85 °C . . . 20 WVDC at + 125 °C						
1800.0	A1	200D188X0030A1	202D188X0030A1	0.28	4.5	1.13
2200.0	A2	200D228X0030A2	202D228X0030A2	0.22	3.6	1.41
2600.0	A3	200D268X0030A3	202D268X0030A3	0.18	3.0	1.67
3500.0	A4	200D358X0030A4	202D358X0030A4	0.14	2.3	2.05
4400.0	A5	200D448X0030A5	202D448X0030A5	0.11	1.8	2.54
35 WVDC at + 85 °C . . . 22 WVDC at + 125 °C						
1400.0	A1	200D148X0035A1	202D148X0035A1	0.28	5.1	1.13
1800.0	A2	200D188X0035A2	202D188X0035A2	0.22	4.1	1.41
2200.0	A3	200D228X0035A3	202D228X0035A3	0.18	3.4	1.67
2900.0	A4	200D298X0035A4	202D298X0035A4	0.14	2.6	2.05
3600.0	A5	200D368X0035A5	202D368X0035A5	0.11	2.1	2.54
3900.0	B1	-	202D398X0035B1	0.16	2.7	2.03
5500.0	B2	-	202D558X0035B2	0.11	1.9	2.64
7000.0	B3	-	202D708X0035B3	0.089	1.5	3.16
8600.0	B4	-	202D868X0035B4	0.073	1.2	3.72
10 000.0	B5	-	202D109X0035B5	0.062	1.0	4.25
12 000.0	B6	-	202D129X0035B6	0.053	0.90	4.84
13 000.0	B7	-	202D139X0035B7	0.047	0.79	5.38
40 WVDC at + 85 °C . . . 25 WVDC at + 125 °C						
1200.0	A1	200D128X0040A1	202D128X0040A1	0.28	5.5	1.13
1500.0	A2	200D158X0040A2	202D158X0040A2	0.22	4.4	1.41
1800.0	A3	200D188X0040A3	202D188X0040A3	0.18	3.7	1.67
2400.0	A4	200D248X0040A4	202D248X0040A4	0.14	2.8	2.05
3000.0	A5	200D308X0040A5	202D308X0040A5	0.11	2.3	2.54
50 WVDC at + 85 °C . . . 35 WVDC at + 125 °C						
960.0	A1	200D967X0050A1	202D967X0050A1	0.28	6.1	1.13
1200.0	A2	200D128X0050A2	202D128X0050A2	0.22	4.9	1.14
1300.0	D3	-	202D138X0050D3	0.38	5.5	1.01
1400.0	A3	200D148X0050A3	202D148X0050A3	0.18	4.1	1.67
1900.0	A4	200D198X0050A4	202D198X0050A4	0.14	3.1	2.05
2400.0	A5	200D248X0050A5	202D248X0050A5	0.11	2.5	2.54
60 WVDC at + 85 °C . . . 40 WVDC at + 125 °C						
800.0	A1	200D807X0060A1	202D807X0060A1	0.28	6.8	1.13
1000.0	A2	200D108X0060A2	202D108X0060A2	0.22	5.4	1.41
1100.0	D3	-	202D118X0060D3	0.38	5.8	1.01
1200.0	A3	200D128X0060A3	202D128X0060A3	0.18	4.5	1.67
1600.0	A4	200D168X0060A4	202D168X0060A4	0.14	3.4	2.05
2000.0	A5	200D208X0060A5	202D208X0060A5	0.11	2.7	2.54
75 WVDC at + 85 °C . . . 50 WVDC at + 125 °C						
650.0	A1	200D657X0075A1	202D657X0075A1	0.28	7.9	1.13
820.0	A2	200D827X0075A2	202D827X0075A2	0.22	6.3	1.41
880.0	D3	-	202D887X0075D3	0.55	6.0	0.84
980.0	A3	200D987X0075A3	202D987X0075A3	0.18	5.2	1.64
1300.0	A4	200D138X0075A4	202D138X0075A4	0.14	3.9	2.05
1600.0	A5	200D168X0075A5	202D168X0075A5	0.11	3.2	2.54

Note

(1) The Part Numbers listed are for ± 20 % tolerance. To specify ± 10 % tolerance, change the digit following “X” from “0” to “9”. For requirements or ratings other than those listed, please contact a Vishay representative.

04021 RATINGS AND CASE CODES

DSCC DRAWING 04021	CAPACITANCE (µF)	CASE CODE	MAX. DCL µA 25 °C	MAX. DCL µA 85 °C and 125 °C	MAX. IMPEDANCE Ω
15 VDC at 85 °C RATED		**17.2 VDC at 85 °C SURGE**		**10 VDC at 125 °C DERATED**	
04021-01	960	A1	7	58	3.10
04021-02	1200	A2	9	72	2.30
04021-03	1400	A3	11	84	1.70
04021-04	2100	A4	16	126	1.30
04021-05	2400	A5	18	144	1.15
30 VDC at 85 °C RATED		**34.5 VDC at 85 °C SURGE**		**20 VDC at 125 °C DERATED**	
04021-06	520	A1	8	63	5.30
04021-07	660	A2	10	80	4.20
04021-08	820	A3	13	99	2.90
04021-09	1200	A4	18	144	2.30
04021-10	1300	A5	20	156	2.10
50 VDC at 85 °C RATED		**57.5 VDC at 85 °C SURGE**		**30 VDC at 125 °C DERATED**	
04021-11	400	A1	10	80	7.20
04021-12	430	A1	10	78	6.40
04021-13	500	A2	13	100	5.60
04021-14	600	A3	15	120	4.10
04021-15	800	A4	20	160	3.10
04021-16	1000	A5	23	180	2.80
75 VDC at 85 °C RATED		**86.2 VDC at 85 °C SURGE**		**50 VDC at 125 °C DERATED**	
04021-17	270	A1	9	81	8.50
04021-18	330	A2	12	99	7.00
04021-19	400	A3	15	119	5.00
04021-20	600	A4	20	180	3.65
04021-21	660	A5	23	198	3.50
100 VDC at 85 °C RATED		**115.0 VDC at 85 °C SURGE**		**65 VDC at 125 °C DERATED**	
04021-22	170	A1	9	68	15.00
04021-23	220	A2	11	88	11.60
04021-24	260	A3	13	104	8.00
04021-25	350	A4	18	140	6.50
04021-26	440	A5	22	176	5.80
150 VDC at 85 °C RATED		**172.0 VDC at 85 °C SURGE**		**100 VDC at 125 °C DERATED**	
04021-27	70	A1	6	42	28.80
04021-28	90	A2	7	54	22.40
04021-29	100	A3	9	60	16.40
04021-30	140	A4	11	84	12.40
04021-31	180	A5	14	104	11.20

ORDERING INFORMATION - DSCC PART NUMBER

04021	-29
DSCC DRAWING NUMBER	DASH NUMBER

DEFENSE SUPPLY CENTER, COLUMBUS COLUMBUS, OHIO	DRAWING NO. 04021

Wet Tantalum Capacitors
Wet Sintered Anode TANTALEX® Components
TANTAPAK® Capacitor Assemblies

MILITARY SPECIFICATION TANTAPAK® CAPACITOR ASSEMBLIES - CROSS REFERENCE

CAPACITANCE (µF)	RATED VOLTAGE at + 85 °C	CASE CODE	VISHAY PART NUMBER	(DISCONTINUED) CL55 TYPE [1] DESIGNATION	(NEW) DSCC DRAWING [1] 04021
960.0	15	A1	202D967X0015A1	CL55BE961MPG	04021-01
1200.0	15	A2	202D128X0015A2	CL55BE122MPG	04021-02
1400.0	15	A3	202D148X0015A3	CL55BE142MPG	04021-03
2100.0	15	A4	202D218X0015A4	CL55BE212MPG	04021-04
2400.0	15	A5	202D248X0015A5	CL55BE242MPG	04021-05
520.0	30	A1	202D527X0030A1	CL55BH521MPG	04021-06
660.0	30	A2	202D667X0030A2	CL55BH661MPG	04021-07
820.0	30	A3	202D827X0030A3	CL55BH821MPG	04021-08
1200.0	30	A4	202D128X0030A4	CL55BH122MPG	04021-09
1300.0	30	A5	202D138X0030A5	CL55BH132MPG	04021-10
400.0	50	A1	202D407X0050A1	CL55BJ401MPG	04021-11
430.0	50	A1	202D437X0050A1	CL55BJ431MPG	04021-12
500.0	50	A2	202D507X0050A2	CL55BJ501MPG	04021-13
600.0	50	A3	202D607X0050A3	CL55BJ601MPG	04021-14
800.0	50	A4	202D807X0050A4	CL55BJ801MPG	04021-15
1000.0	50	A5	202D108X0050A5	CL55BJ102MPG	04021-16
270.0	75	A1	202D277X0075A1	CL55BL271MPG	04021-17
330.0	75	A2	202D337X0075A2	CL55BL331MPG	04021-18
400.0	75	A3	202D407X0075A3	CL55BL401MPG	04021-19
600.0	75	A4	202D607X0075A4	CL55BL601MPG	04021-20
660.0	75	A5	202D667X0075A5	CL55BL661MPG	04021-21
170.0	100	A1	202D177X0100A1	CL55BN171MPG	04021-22
220.0	100	A2	202D227X0100A2	CL55BN221MPG	04021-23
260.0	100	A3	202D267X0100A3	CL55BN261MPG	04021-24
350.0	100	A4	202D357X0100A4	CL55BN351MPG	04021-25
440.0	100	A5	202D447X0100A5	CL55BN441MPG	04021-26
70.0	150	A1	202D706X0150A1	CL55BQ700MPG	04021-27
90.0	150	A2	202D906X0150A2	CL55BQ900MPG	04021-28
100.0	150	A3	202D107X0150A3	CL55BQ101MPG	04021-29
140.0	150	A4	202D147X0150A4	CL55BQ141MPG	04021-30
180.0	150	A5	202D187X0150A5	CL55BQ181MPG	04021-31

Note

[1] Vishay is no longer qualified to provide military CL55 type which has been discontinued.
It has been replaced by an equivalent product built to DSCC Drawing 04021

Disclaimer

All product specifications and data are subject to change without notice.

Vishay Intertechnology, Inc., its affiliates, agents, and employees, and all persons acting on its or their behalf (collectively, “Vishay”), disclaim any and all liability for any errors, inaccuracies or incompleteness contained herein or in any other disclosure relating to any product.

Vishay disclaims any and all liability arising out of the use or application of any product described herein or of any information provided herein to the maximum extent permitted by law. The product specifications do not expand or otherwise modify Vishay’s terms and conditions of purchase, including but not limited to the warranty expressed therein, which apply to these products.

No license, express or implied, by estoppel or otherwise, to any intellectual property rights is granted by this document or by any conduct of Vishay.

The products shown herein are not designed for use in medical, life-saving, or life-sustaining applications unless otherwise expressly indicated. Customers using or selling Vishay products not expressly indicated for use in such applications do so entirely at their own risk and agree to fully indemnify Vishay for any damages arising or resulting from such use or sale. Please contact authorized Vishay personnel to obtain written terms and conditions regarding products designed for such applications.

Product names and markings noted herein may be trademarks of their respective owners.