REVISION FOR DWG # 1PB-AK2-xPx-KDx				
REV	CH.NO.	DESCRIPTION	DATE	REVISED BY
-	-	ORIGINAL DESIGN	11/20/2007	PHILIPP E.

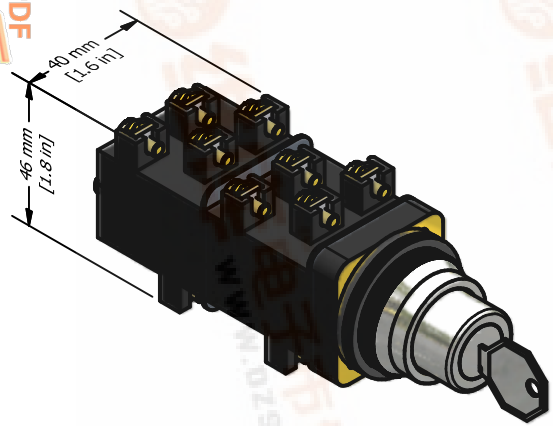

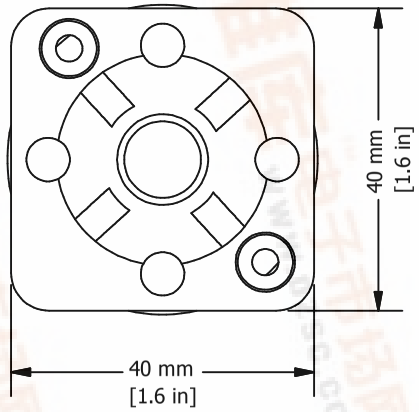

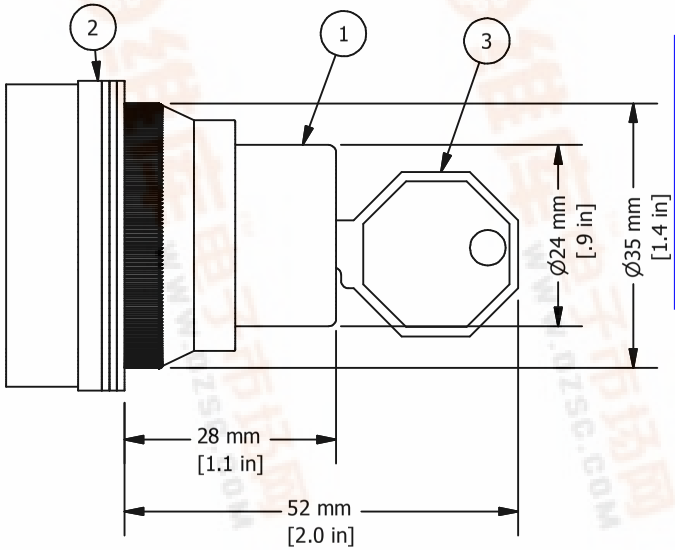

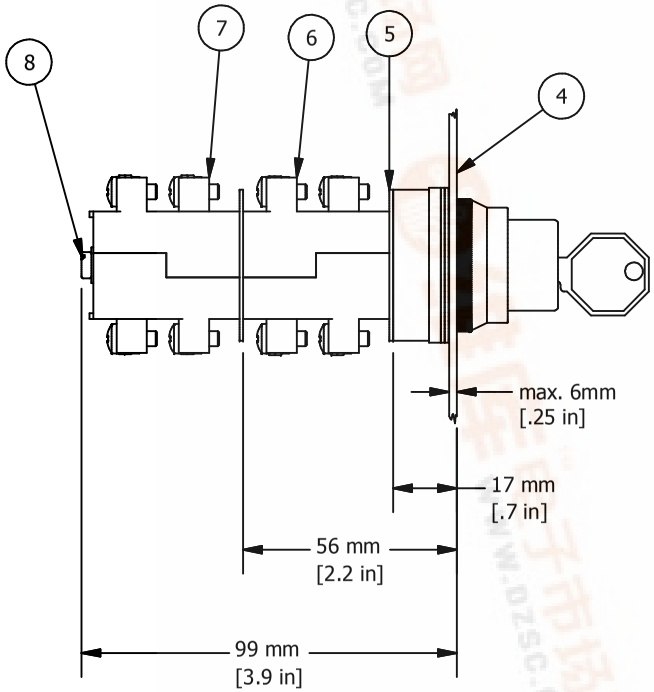

* = Operator includes 3x ARW1.2, 1x ARW3.2 and 1x Key

** = Switch Contacts include Contact element washer and two SC24 installation screws, if more than two contact blocks are used, additional screws must be purchased seperatly (SC45, SC65 or SC90)

ITEM	DESCRIPTION	CAT. NO.	FUNCTION	COLOR	MIN. QTY.	MAX. QTY.
1*	30 mm Key Selector Switch Metal Operator	AK2-2PB	2 Position Maintained, Left/Right	-	1	1
		AK2-2POSR	2 Position Momentary, Left	-	1	1
		AK2-2PI	2 Position Maintained, Right	-	1	1
		AK2-2PO	2 Position Maintained, Left	-	1	1
		AK2-3PB	3 Position Maintained, Left/Right	-	1	1
		AK2-3PC	3 Position Maintained, Center	-	1	1
		AK2-2PO-KD	2 Position Maintained, Left, Key 1	-	1	1
		AK2-2PO-KD1	2 Position Maintained, Left, Key 2	-	1	1
		AK2-2PO-KD2	2 Position Maintained, Left, Key 3	-	1	1
		AK2-2PO-KD4	2 Position Maintained, Left, Key 4	-	1	1
		AK2-2PO-KD5	2 Position Maintained, Left, Key 5	-	1	1
		AK2-3PC-KD	3 Position Maintained, Center, Key 1	-	1	1
		AK2-3PC-KD1	3 Position Maintained, Center, Key 2	-	1	1
		AK2-3PC-KD2	3 Position Maintained, Center, Key 3	-	1	1
		AK2-3PC-KD3	3 Position Maintained, Center, Key 4	Black	1	1
2*	Rubber washer	ARW1.2/ARW3.2	-	Black	1	1
3*	Replacment Key	KY30	-	-	1	1
4	Panel	-	-	-	-	-
5**	Contact Element washer	-	-	Black	1	2
6**	Switch Contacts	S11	-	Red	1	2
7**	Switch Contacts	S12	-	Yellow	1	2
8**	Contact Block Installation Screws	SC25/SC45/SC65/SC90	-	-	2	2

查询AK2-XPX-KDX供应商
捷多邦，专业PCB打样工厂，24小时加急出货

LESS OTHERWISE SPECIFIED:
L DIMENSIONS ARE IN MILLIMETERS
IRD ANGLE PROJECTION

RANCE		
	=	±1 mm
.X	=	±0.5 mm
.XX	=	±0.2 mm
L	=	- mm

METRIC

This Drawing is the property of
Altech Corp.®
35 Royal Road
Flemington, NJ 08822-6000
(908) 806-9400
Fax (908) 806-9490

AND IS A CONFIDENTIAL DISCLOSURELENT WITHOUT CONSIDERATION OTHER THAN THE BORROWER'S AGREEMENT THAT IT SHALL NOT BE REPRODUCED, COPIED, LENT OR DISPOSED OF DIRECTLY OR INDIRECTLY NOR USED FOR ANY PURPOSE OTHER THAN THAT FOR WHICH IT IS SPECIFICALLY FURNISHED.

TITEL 30 mm Key Selector Switch Metal Operator AK2-xPy-KDz

DRAWN BY: Philipp Ernstberger	11/20/2007	DRAWING NO.: 1PB-AK2-xPx-KDx	REV.: -
CHECKED BY: Laszlo Gyorgypal	11/20/2007		
RELEASED BY: Laszlo Gyorgypal	11/20/2007	SCALE: -	SHEET: 1 OF: 1

PDF 搜索一下 pdf.dzsc.com