MATERIALS AND FINISHES

BODY, HOUSING BRASS
PLATED GOLD

CENTER CONTACT BRASS
PLATED GOLD

INSULATOR TEFLON

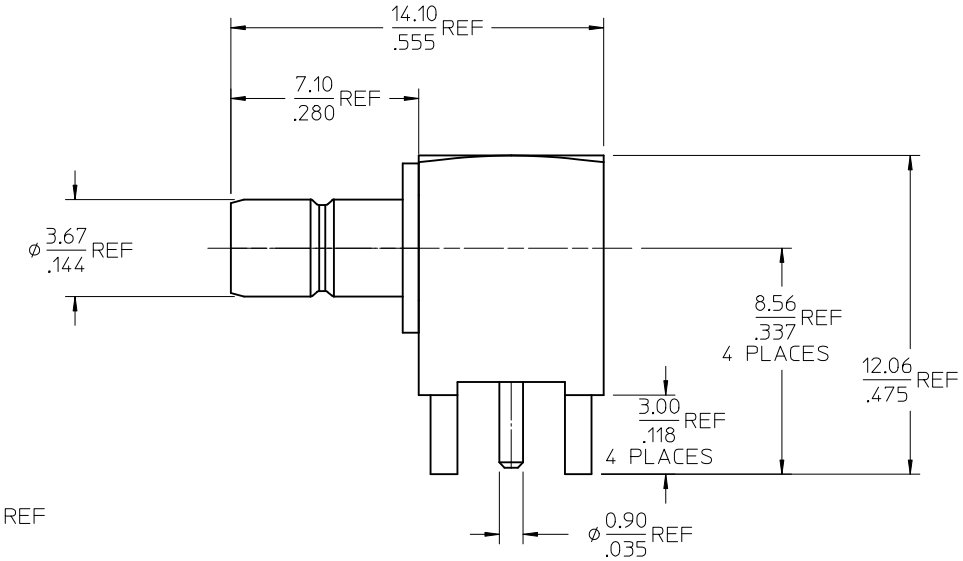

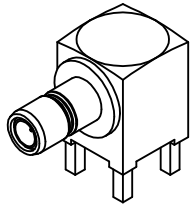

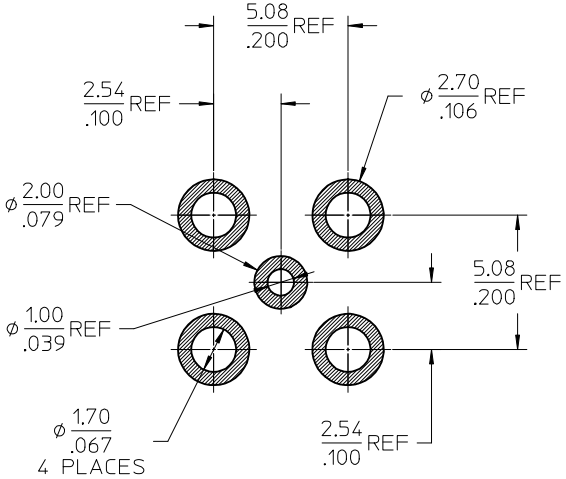

RECOMMENDED PCB HOLE
SOLDER RING

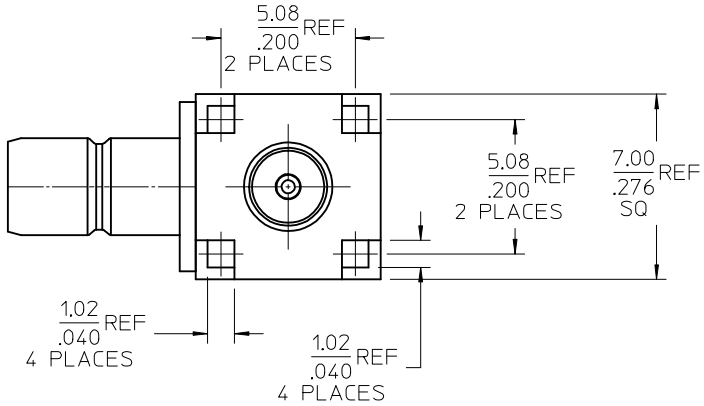

NOTE:

RF LEAKAGE AND VSWR ARE
NOT APPLICATABLE IN
PS-73598-0099

PART NO.	PACKAGING
73396-0580	SMALL TRAY PACKING (20 PCS)
73404-2280	73100-0103, ONE PER BAG
73100-0103	PLASTIC TRAYS (80 PCS)

SPECIFICATION	DESCRIPTION
PS-73598-0099	PRODUCT SPECIFICATION

ADDED QUANTITIES PER RF15-E413
EC NO: URF2016-0432 2015/12/04
DRWN:ELIN
CH'KD:
APPR:YCHENG 2015/12/15
DESCRIPTION
REV C4

QUALITY SYMBOLS
▼=0
▽C=0

GENERAL TOLERANCES (UNLESS SPECIFIED)

	mm	INCH
4 PLACES	± ---	± ---
3 PLACES	± ---	± ---
2 PLACES	± ---	± ---
1 PLACE	± ---	± ---
ANGULAR ± 2 °		

DRAFT WHERE APPLICABLE MUST REMAIN WITHIN DIMENSIONS

DIMENSION STYLE: MM/IN
SCALE
DESIGN UNITS: METRIC
THIRD ANGLE PROJECTION

DRAWN BY: IRIS WANG DATE: 1993/08/04
CHECKED BY DATE
APPROVED BY DATE

TITLE: SMB JACK, R/A, 50 OHMS RECEPTACLE SMB-J/RA

molex MOLEX INCORPORATED

MATERIAL NO.: SEE TABLE
DOCUMENT NO.: SD-73100-0103
SHEET NO.: 1 OF 1
SIZE: C

THIS DRAWING CONTAINS INFORMATION THAT IS PROPRIETARY TO MOLEX INCORPORATED AND SHOULD NOT BE USED WITHOUT WRITTEN PERMISSION