31296

TABLE 1 - TERMINAL CRIMP DIMENSION REFERENCE TABLE

PART NO. (LEFT TO RIGHT PAYOFF)	PART NO. (RIGHT TO LEFT PAYOFF)	GRIP SIZE (ga.)	WIRE SIZE (awg)	WIRE SPECIFICATION	CONDUCTOR **CH** (SEC C-C) ±0.05	CONDUCTOR **CW** (SEC C-C) ±0.10	INSULATOR **IH** (SEC B-B) ±0.10	INSULATOR **IW** (SEC B-B) ±0.10	NOMINAL PULL TEST (N)
31296-0008	31296-1008	18/20	18	MIL-123A	1.25	2.15	2.40	2.45	173
31296-0008	31296-1008	18/20	20	MIL-123A	1.15	2.15	2.40	2.45	133

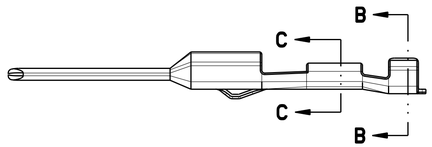

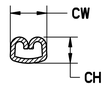

SECTION **C-C**

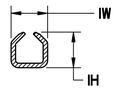

SECTION **B-B**

CRIMP INFORMATION

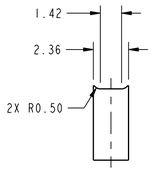

INSULATOR ANVIL
SCALE 5:1

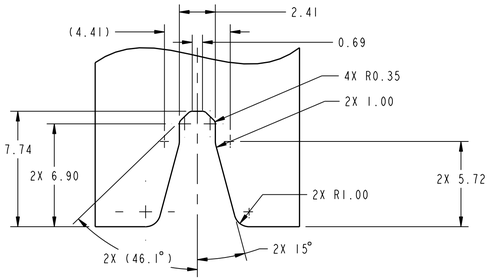

INSULTOR PUNCH

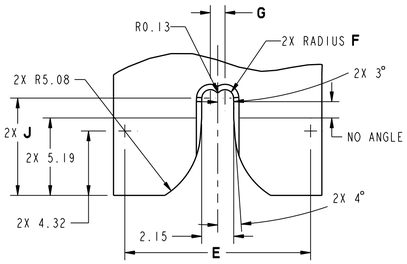

CONDUCTOR PUNCH

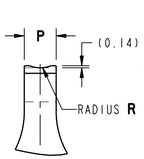

CONDUCTOR ANVIL
FRONT VIEW
SCALE 5:1

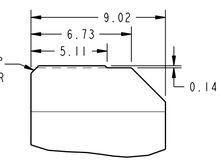

CONDUCTOR ANVIL
SIDE VIEW

CRIMP TOOL INFORMATION

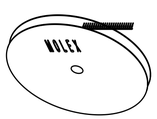

LEFT PAYOFF

DETAIL **A**
SCALE 1:1

SEE DETAIL **A**

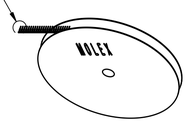

RIGHT PAYOFF

PLATING NOTES:

1. PRECIOUS METAL PLATING: PER MOLEX ES-88 (REVISION: REL)

1.1 CONTACT ZONE "B" (ELECTROPLATED GOLD OVER NICKEL)

1.2 ZONE "A": REDUCED THICKNESS FROM ZONE "B" IS PERMITTED ZONE "A" SHALL BE COMPLETELY COVERED TO PREVENT EXPOSED BASE METAL

1.3 ZONE "B": THICKNESS 1 (1.25 - 2.25 MICROMETERS) ELECTRODEPOSITED SULFAMATE DUCTILE NICKEL (BASE LAYER)

THICKNESS 2 (0.76 MICROMETER MINIMUM) ELECTRODEPOSITED GOLD CAP

1.4 ZONE "C": REDUCED THICKNESS FROM ZONE "B" AND ZONE "D" IS PERMITTED. ZONE "C" SHALL BE COMPLETELY COVERED TO PREVENT EXPOSED BASE METAL

1.5 ZONE "D": TIN PLATING EXCEPT NICKEL THICKNESS THICKNESS 1 (1.25 - 2.25 MICROMETERS); ELECTRODEPOSITED SULFAMATE DUCTILE NICKEL (BASE LAYER)

THICKNESS 2 (2.50 - 4.00 MICROMETERS); ELECTRODEPOSITED TIN (100% TIN)

1.6 ZONE "E": REDUCED TIN THICKNESS FROM ZONE "D" IS PERMITTED. ZONE "E" SHALL BE COMPLETELY COVERED WITH NICKEL.

1.7 ZONE "G": THICKNESS 1 (1.25 - 2.25 MICROMETERS) ELECTRODEPOSITED SULFAMATE DUCTILE NICKEL (BASE LAYER)

THICKNESS 2 (0.05 MICROMETERS MINIMUM) ELECTRODEPOSITED GOLD CAP

1.8 ZONE "H": THICKNESS 1 (1.25 - 2.25 MICROMETERS) ELECTRODEPOSITED SULFAMATE DUCTILE NICKEL (BASE LAYER)

THICKNESS 2 (0.76 MICROMETER MINIMUM ELECTRODEPOSITED GOLD CAP

1.9 ZONE "J": REDUCED THICKNESS FRON ZONE "D" AND ZONE "H" PERMITTED. ZONE "J" SHALL BE COMPLETELY COVERED WITH NICKEL TO PREVENT EXPOSED BASE METAL.

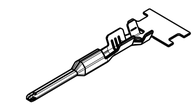

SCALE 2:1

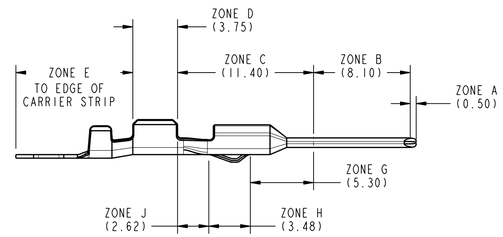

SCALE 4:1

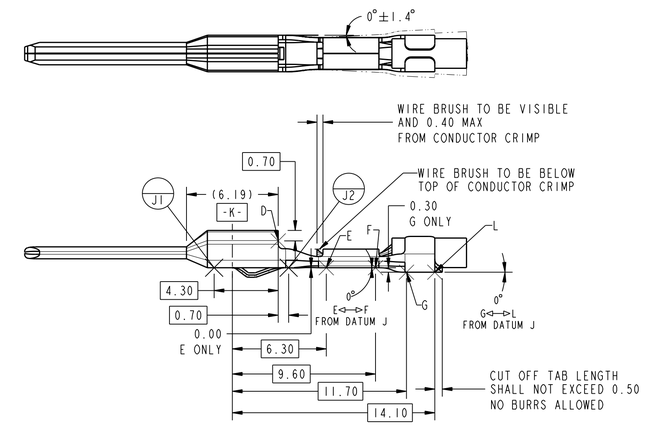

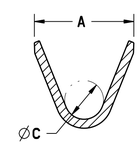

SECTION **C-C**
SCALE 10:1

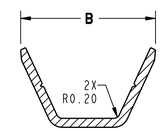

SECTION **B-B**
SCALE 10:1

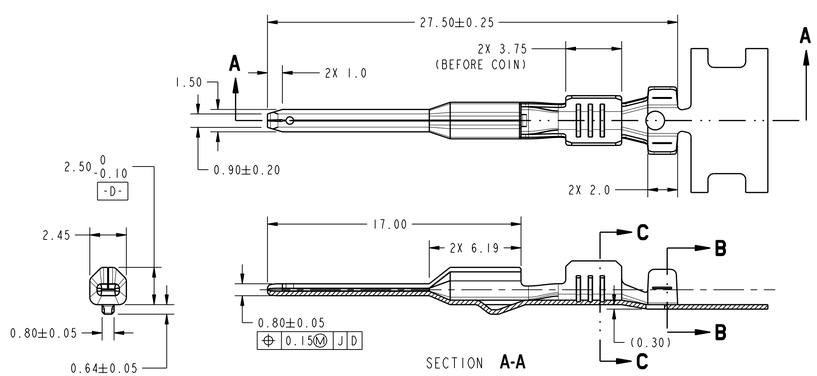

SECTION **A-A**

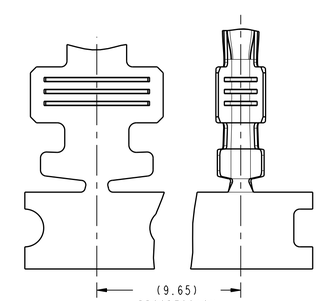

SCALE 5:1

NOTES: UNLESS OTHERWISE SPECIFIED

1. MATERIAL: ASTM B422, UNS C19025, HR04
   THICKNESS: 0.30 mm ±0.01
   TEMPER: FULL HARD (REF.)
   TENSILE: 496-572 MPA
   PLATING: SEE PLATING NOTES ABOVE
2. MEETS CRIMP PERFORMANCE SPECIFICATION SAE/USCAR-21 (REL:(08/29/01)
3. MEETS SAE/USCAR-2 REV 3 (TEMP CLASS 3) (REL: APRIL 2001)
   SAE/USCAR-20 (REL: DECEMBER 2001)
   SAE/USCAR -12 REV 2 (REL: DECEMBER 2001)
4. MEETS ELECTRICAL CONNECTION SYSTEM DESIGN SPECIFICATION (SDS) REV. 10
5. "TSC" ON A DIMENSION TO BE INTERPRETED AS DISTANCE TO A THEORETICAL SHARP CORNER AS IF THE RADIUS WERE NOT PRESENT.
6. ENGINEERING APPROVAL REQUIRED FOR ALL SOURCING AND TOOLING OF THIS PART.
7. FOR ENGINEERING APPROVED SOURCE SEE ENGINEERING RELEASE.
8. CHANGES IN DESIGN COMPOSITION OR PROCESSING FROM THE PART PREVIOUSLY APPROVED FOR PART PRODUCTION REQUIRES PRIOR ENGINEERING APPROVAL.
9. GENERAL TOLERANCES: ±0.3 ALL ONE PLACE DIMENSIONS, ±0.10 ALL TWO PLACE DIMENSIONS, ±3° ALL ANGULAR DIMENSIONS.
10. 0.2mm MAXIMUM RADIUS PERMISSIBLE ON EDGES AND FILLETS SHOWN AS SHARP FOR STAMPING PARTS.
11. ALL RADIUS 0.25 MAX.

TABLE 2 - TERMINAL GRIP/CRIMP TOOL DIMENSION REFERENCE TABLE

PART NO. LEFT PAYOFF	PART NO. RIGHT PAYOFF	PLATING (STAMPING)	WIRE APPLICATION S.A.E.	WIRE APPLICATION METRIC	A±0.30	B±0.30	C±0.30	D±0.30	E±0.005	F±0.005	G±0.005	J±0.005	K±0.005	M±0.005	N±0.005	P±0.005	R±0.005	U±0.005	V±0.005
31296-0008	31296-1008	GOLD	18, 20	TBD	3.3	4.5	1.3	-	12.46	0.57	0.99	6.52	-	-	-	2.14	1.94	-	-

EC NO: UAU2008-0063
DRWN: L.PULLIAM 2007/07/24
CH'K: A.DHIR 2007/07/25
APPR: B.MOSER 2007/07/31
DESCRIPTION
REV H

QUALITY SYMBOLS
▼ =0
Ⓒ =0

GENERAL TOLERANCES (UNLESS SPECIFIED)

	mm	INCH
4 PLACES	± --	± --
3 PLACES	± --	± --
2 PLACES	± 0.10	± --
1 PLACE	± 0.3	± --
ANGULAR	± 3°	

SCALE 5:1
DESIGN UNITS mm
DIMENSION STYLE mm

THIRD ANGLE PROJECTION
REVISE ON CAD ONLY

TITLE
BLADE, SHORTING BAR TERMINAL
MX150

DRAWN BY D.GRIFFITHS	DATE 6/15/99	
CHECKED BY D.G./V.P.	DATE 7/28/99	
APPROVED BY V.PURUSHOTHAMAN	DATE 7/28/99	

molex MOLEX INCORPORATED

MATERIAL NO. SEE CHART
DOCUMENT NO. SD-31296-001
SHEET NO. 1 OF 2

THIS DRAWING CONTAINS INFORMATION THAT IS PROPRIETARY TO MOLEX INCORPORATED AND SHOULD NOT BE USED WITHOUT WRITTEN PERMISSION

D

31296

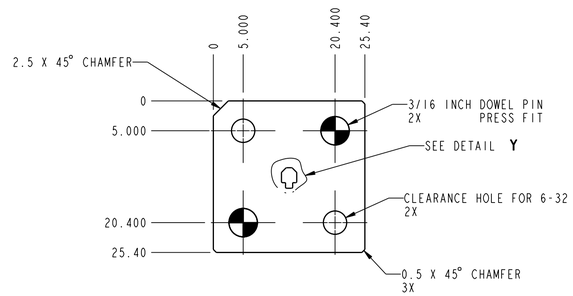

BODY CAVITY
FRONT VIEW

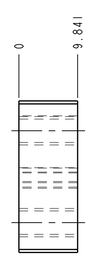

BODY CAVITY
SIDE VIEW

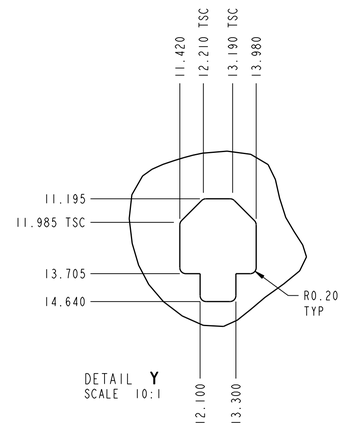

DETAIL Y
SCALE 10:1

CHECKING AID

ITEM NO.	DESCRIPTION	QUANTITY
1	ENTRY COVER	1
2	GRIP CAVITY	1
3	BODY CAVITY	1
4	PIN CAVITY	1
5	TIP COVER	1

HARDENED TOOL STEEL

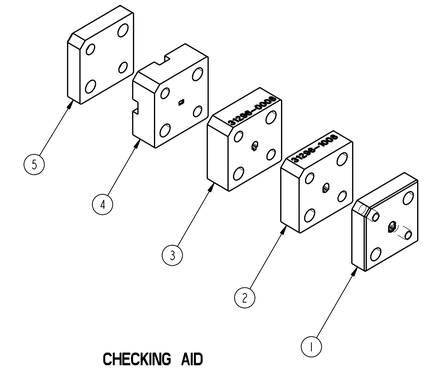

CHECKING AID
EXPLODED ISO VIEW
SCALE 1:1

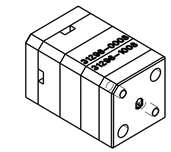

CHECKING AID
ISO VIEW
SCALE 1:1

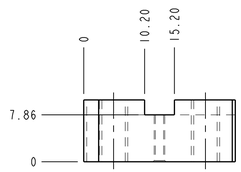

PIN CAVITY
TOP VIEW

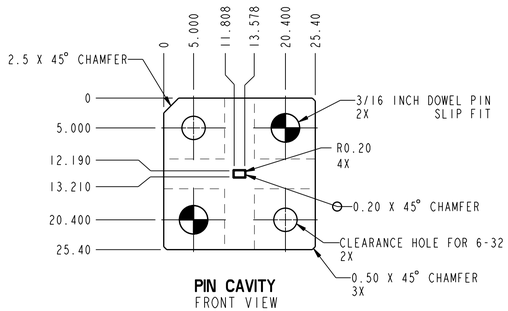

PIN CAVITY
FRONT VIEW

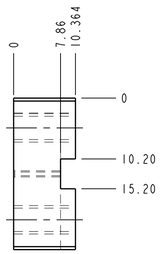

PIN CAVITY
SIDE VIEW

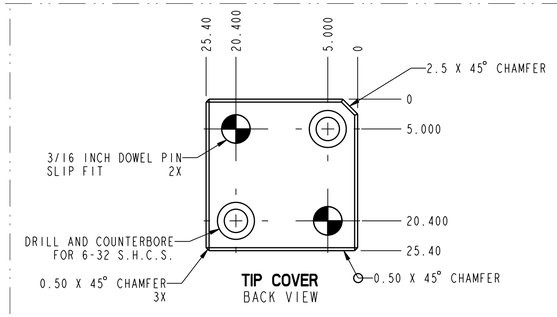

TIP COVER
BACK VIEW

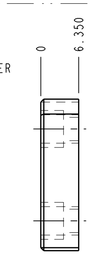

TIP COVER
SIDE VIEW

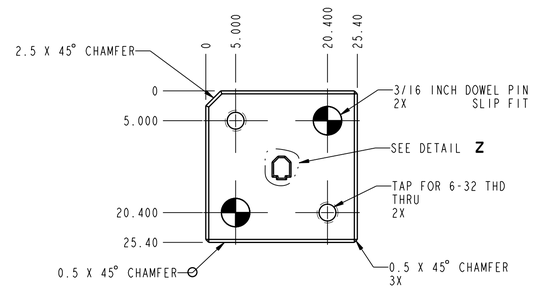

ENTRY COVER
FRONT VIEW

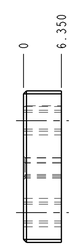

ENTRY COVER
SIDE VIEW

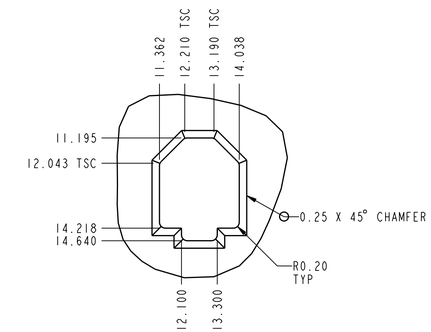

DETAIL Z
SCALE 10:1

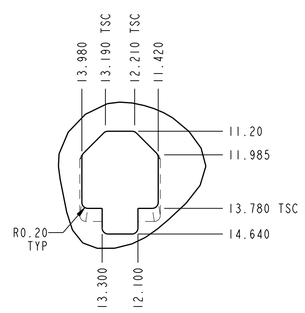

DETAIL W
SCALE 10:1

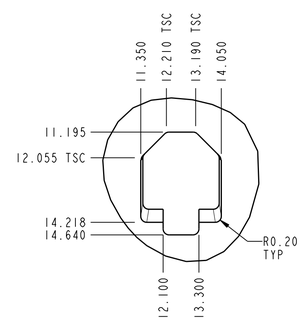

DETAIL X
SCALE 10:1

CRIMP REQUIREMENTS:

1. CRIMP STRAIGHTNESS MUST MEET THE REQUIREMENTS AS DESCRIBED ON SHEET 1
2. THE CRIMPED TERMINAL MUST FIT FREELY INTO THE CHECKING AID AS SHOWN ON THIS PAGE
3. FOR OTHER MECHANICAL REQUIREMENTS ON CRIMPED TERMINALS REFER TO SAE/USCAR-21 (5-13-02) SECTIONS; 4.2 (VISUAL INSPECTION), 4.3 (CROSS SECTION ANALYSIS) AND 4.4 (CONDUCTOR CRIMP PULLOUT FORCE)

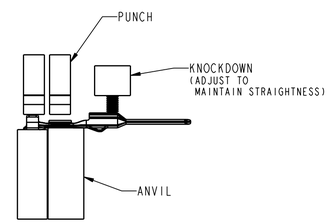

CRIMP TOOLING

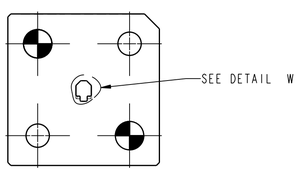

GRIP CAVITY
BACK VIEW

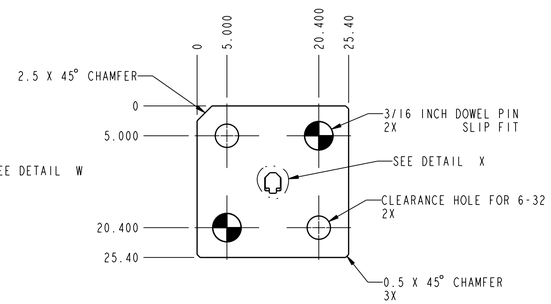

GRIP CAVITY
FRONT VIEW

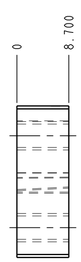

GRIP CAVITY
SIDE VIEW

EC NO: UAU2008-0063
DRWN: L.PULLIAM 2007/07/24
CH'K: A.DHIR 2007/07/25
APPR: B.MOSER 2007/07/31

G4

REV

DESCRIPTION

QUALITY SYMBOLS
▼ =0
(C) =0

GENERAL TOLERANCES (UNLESS SPECIFIED)

	mm	INCH
4 PLACES	± --	± --
3 PLACES	± 0.005	± --
2 PLACES	± 0.03	± --
1 PLACE	± 0.3	± --
ANGULAR	± 3°	

SCALE 2:1

DESIGN UNITS mm

DIMENSION STYLE mm

DRAWN BY	DATE
D.GRIFFITHS	6/15/99
CHECKED BY	DATE
D.G./V.P.	7/28/99
APPROVED BY	DATE
V.PURUSHOTHAMAN	7/28/99

THIRD ANGLE PROJECTION

REVISE ON CAD ONLY

TITLE
BLADE, SHORTING BAR TERMINAL
MX150

MOLEX INCORPORATED

MATERIAL NO. SEE CHART

DOCUMENT NO. SD-31296-001

SHEET NO. 2 OF 2

THIS DRAWING CONTAINS INFORMATION THAT IS PROPRIETARY TO MOLEX INCORPORATED AND SHOULD NOT BE USED WITHOUT WRITTEN PERMISSION

D

31296

TABLE 1 - TERMINAL CRIMP DIMENSION REFERENCE TABLE

PART NO. (LEFT TO RIGHT PAYOFF)	PART NO. (RIGHT TO LEFT PAYOFF)	GRIP SIZE (ga.)	WIRE SIZE (awg)	WIRE SPECIFICATION	CONDUCTOR **CH** (SEC C-C) ±0.05	CONDUCTOR **CW** (SEC C-C) ±0.10	INSULATOR **IH** (SEC B-B) ±0.10	INSULATOR **IW** (SEC B-B) ±0.10	NOMINAL PULL TEST (N)
31296-0008	31296-1008	18/20	18	MIL-123A	1.25	2.15	2.40	2.45	173
31296-0008	31296-1008	18/20	20	MIL-123A	1.15	2.15	2.40	2.45	133

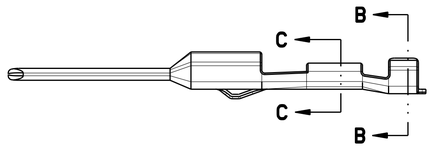

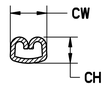

SECTION **C-C**

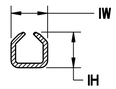

SECTION **B-B**

CRIMP INFORMATION

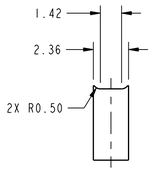

INSULATOR ANVIL
SCALE 5:1

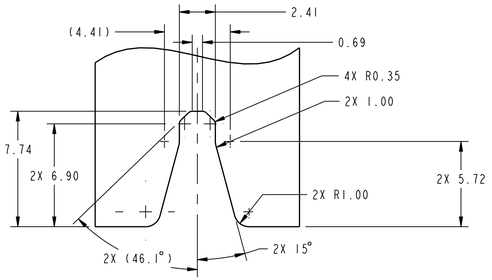

INSULTOR PUNCH

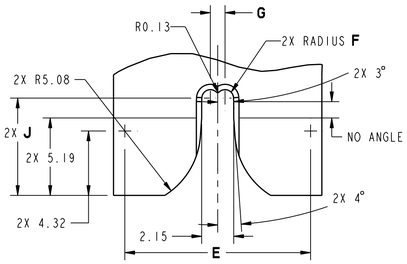

CONDUCTOR PUNCH

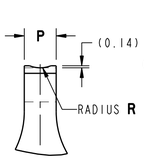

CONDUCTOR ANVIL
FRONT VIEW
SCALE 5:1

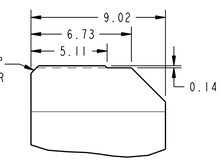

CONDUCTOR ANVIL
SIDE VIEW

CRIMP TOOL INFORMATION

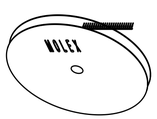

LEFT PAYOFF

DETAIL **A**
SCALE 1:1

SEE DETAIL **A**

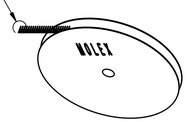

RIGHT PAYOFF

PLATING NOTES:

1. PRECIOUS METAL PLATING: PER MOLEX ES-88 (REVISION: REL)

1.1 CONTACT ZONE "B" (ELECTROPLATED GOLD OVER NICKEL)

1.2 ZONE "A": REDUCED THICKNESS FROM ZONE "B" IS PERMITTED ZONE "A" SHALL BE COMPLETELY COVERED TO PREVENT EXPOSED BASE METAL

1.3 ZONE "B": THICKNESS 1 (1.25 - 2.25 MICROMETERS) ELECTRODEPOSITED SULFAMATE DUCTILE NICKEL (BASE LAYER)

THICKNESS 2 (0.76 MICROMETER MINIMUM) ELECTRODEPOSITED GOLD CAP

1.4 ZONE "C": REDUCED THICKNESS FROM ZONE "B" AND ZONE "D" IS PERMITTED. ZONE "C" SHALL BE COMPLETELY COVERED TO PREVENT EXPOSED BASE METAL

1.5 ZONE "D": TIN PLATING EXCEPT NICKEL THICKNESS THICKNESS 1 (1.25 - 2.25 MICROMETERS); ELECTRODEPOSITED SULFAMATE DUCTILE NICKEL (BASE LAYER)

THICKNESS 2 (2.50 - 4.00 MICROMETERS); ELECTRODEPOSITED TIN (100% TIN)

1.6 ZONE "E": REDUCED TIN THICKNESS FROM ZONE "D" IS PERMITTED. ZONE "E" SHALL BE COMPLETELY COVERED WITH NICKEL.

1.7 ZONE "G": THICKNESS 1 (1.25 - 2.25 MICROMETERS) ELECTRODEPOSITED SULFAMATE DUCTILE NICKEL (BASE LAYER)

THICKNESS 2 (0.05 MICROMETERS MINIMUM) ELECTRODEPOSITED GOLD CAP

1.8 ZONE "H": THICKNESS 1 (1.25 - 2.25 MICROMETERS) ELECTRODEPOSITED SULFAMATE DUCTILE NICKEL (BASE LAYER)

THICKNESS 2 (0.76 MICROMETER MINIMUM ELECTRODEPOSITED GOLD CAP

1.9 ZONE "J": REDUCED THICKNESS FRON ZONE "D" AND ZONE "H" PERMITTED. ZONE "J" SHALL BE COMPLETELY COVERED WITH NICKEL TO PREVENT EXPOSED BASE METAL.

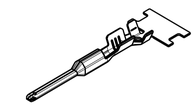

SCALE 2:1

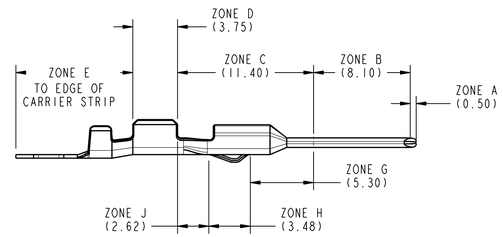

SCALE 4:1

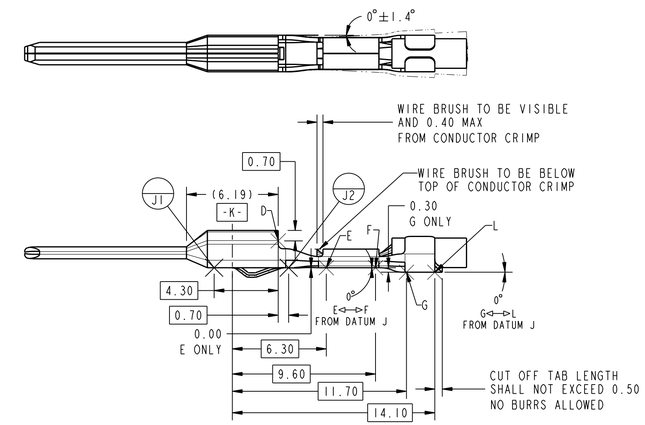

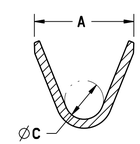

SECTION **C-C**
SCALE 10:1

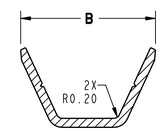

SECTION **B-B**
SCALE 10:1

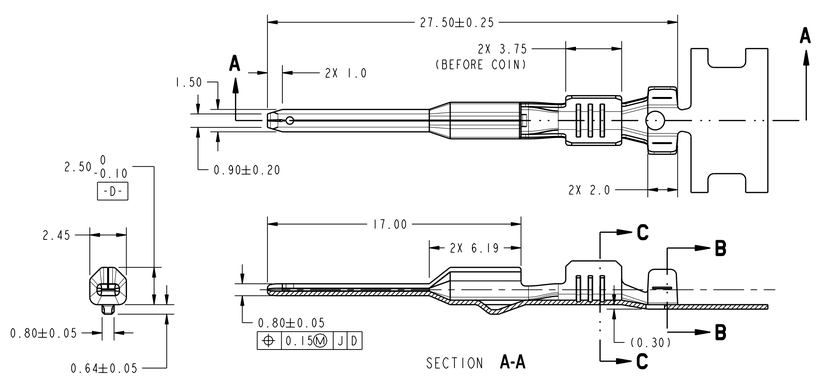

SECTION **A-A**

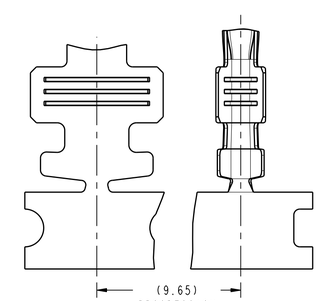

SCALE 5:1

NOTES: UNLESS OTHERWISE SPECIFIED

1. MATERIAL: ASTM B422, UNS C19025, HR04
   THICKNESS: 0.30 mm ±0.01
   TEMPER: FULL HARD (REF.)
   TENSILE: 496-572 MPA
   PLATING: SEE PLATING NOTES ABOVE
2. MEETS CRIMP PERFORMANCE SPECIFICATION SAE/USCAR-21 (REL:(08/29/01)
3. MEETS SAE/USCAR-2 REV 3 (TEMP CLASS 3) (REL: APRIL 2001)
   SAE/USCAR-20 (REL: DECEMBER 2001)
   SAE/USCAR -12 REV 2 (REL: DECEMBER 2001)
4. MEETS ELECTRICAL CONNECTION SYSTEM DESIGN SPECIFICATION (SDS) REV. 10
5. "TSC" ON A DIMENSION TO BE INTERPRETED AS DISTANCE TO A THEORETICAL SHARP CORNER AS IF THE RADIUS WERE NOT PRESENT.
6. ENGINEERING APPROVAL REQUIRED FOR ALL SOURCING AND TOOLING OF THIS PART.
7. FOR ENGINEERING APPROVED SOURCE SEE ENGINEERING RELEASE.
8. CHANGES IN DESIGN COMPOSITION OR PROCESSING FROM THE PART PREVIOUSLY APPROVED FOR PART PRODUCTION REQUIRES PRIOR ENGINEERING APPROVAL.
9. GENERAL TOLERANCES: ±0.3 ALL ONE PLACE DIMENSIONS, ±0.10 ALL TWO PLACE DIMENSIONS, ±3° ALL ANGULAR DIMENSIONS.
10. 0.2mm MAXIMUM RADIUS PERMISSIBLE ON EDGES AND FILLETS SHOWN AS SHARP FOR STAMPING PARTS.
11. ALL RADIUS 0.25 MAX.

TABLE 2 - TERMINAL GRIP/CRIMP TOOL DIMENSION REFERENCE TABLE

PART NO. LEFT PAYOFF	PART NO. RIGHT PAYOFF	PLATING (STAMPING)	WIRE APPLICATION S.A.E.	WIRE APPLICATION METRIC	A±0.30	B±0.30	C±0.30	D±0.30	E±0.005	F±0.005	G±0.005	J±0.005	K±0.005	M±0.005	N±0.005	P±0.005	R±0.005	U±0.005	V±0.005
31296-0008	31296-1008	GOLD	18, 20	TBD	3.3	4.5	1.3	-	12.46	0.57	0.99	6.52	-	-	-	2.14	1.94	-	-

EC NO: UAU2008-0063
DRWN: L.PULLIAM 2007/07/24
CH'K: A.DHIR 2007/07/25
APPR: B.MOSER 2007/07/31
DESCRIPTION
REV H

QUALITY SYMBOLS
▼ =0
Ⓒ =0

GENERAL TOLERANCES (UNLESS SPECIFIED)

	mm	INCH
4 PLACES	± --	± --
3 PLACES	± --	± --
2 PLACES	± 0.10	± --
1 PLACE	± 0.3	± --
ANGULAR	± 3°	

SCALE 5:1
DESIGN UNITS mm
DIMENSION STYLE mm

THIRD ANGLE PROJECTION
REVISE ON CAD ONLY

TITLE
BLADE, SHORTING BAR TERMINAL
MX150

DRAWN BY D.GRIFFITHS	DATE 6/15/99	
CHECKED BY D.G./V.P.	DATE 7/28/99	
APPROVED BY V.PURUSHOTHAMAN	DATE 7/28/99	

molex MOLEX INCORPORATED

MATERIAL NO. SEE CHART
DOCUMENT NO. SD-31296-001
SHEET NO. 1 OF 2

THIS DRAWING CONTAINS INFORMATION THAT IS PROPRIETARY TO MOLEX INCORPORATED AND SHOULD NOT BE USED WITHOUT WRITTEN PERMISSION

D

31296

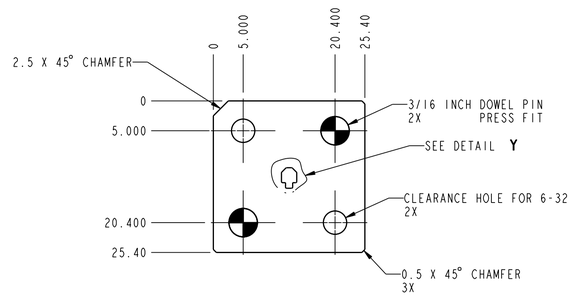

BODY CAVITY
FRONT VIEW

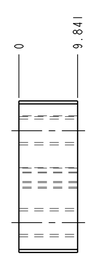

BODY CAVITY
SIDE VIEW

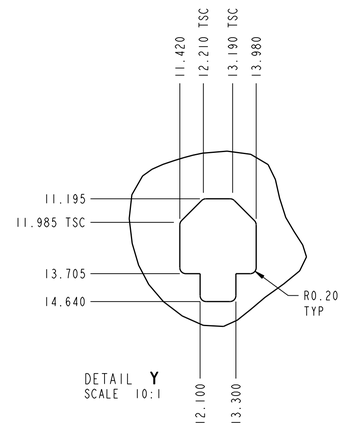

DETAIL Y
SCALE 10:1

CHECKING AID

ITEM NO.	DESCRIPTION	QUANTITY
1	ENTRY COVER	1
2	GRIP CAVITY	1
3	BODY CAVITY	1
4	PIN CAVITY	1
5	TIP COVER	1

HARDENED TOOL STEEL

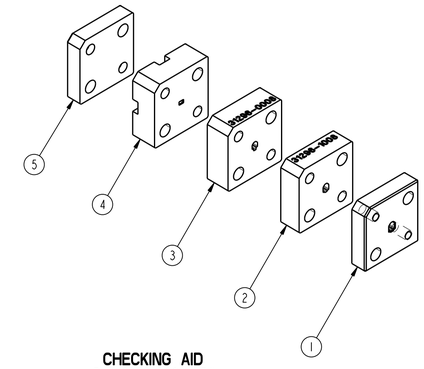

CHECKING AID
EXPLODED ISO VIEW
SCALE 1:1

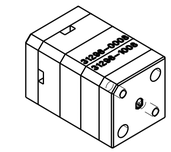

CHECKING AID
ISO VIEW
SCALE 1:1

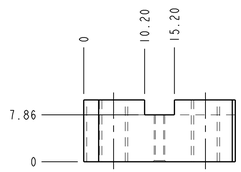

PIN CAVITY
TOP VIEW

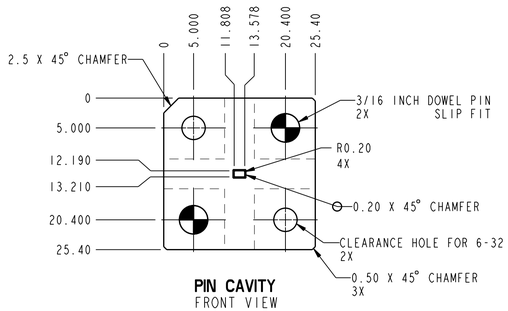

PIN CAVITY
FRONT VIEW

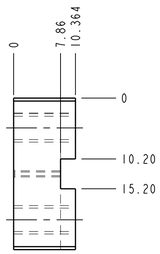

PIN CAVITY
SIDE VIEW

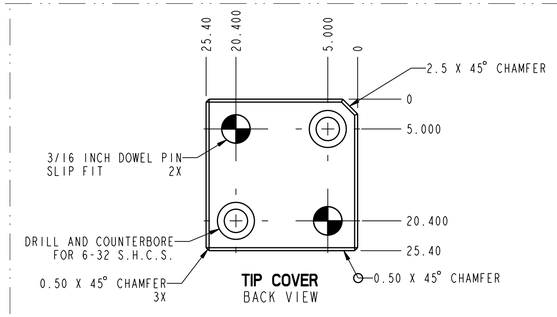

TIP COVER
BACK VIEW

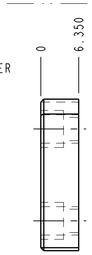

TIP COVER
SIDE VIEW

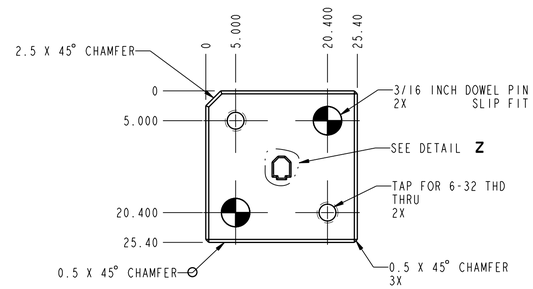

ENTRY COVER
FRONT VIEW

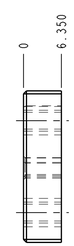

ENTRY COVER
SIDE VIEW

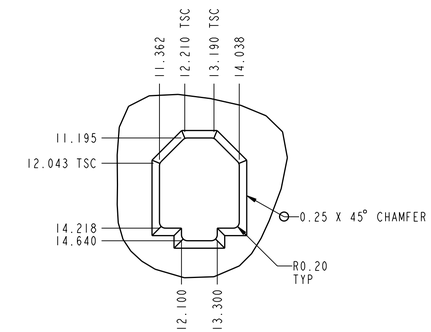

DETAIL Z
SCALE 10:1

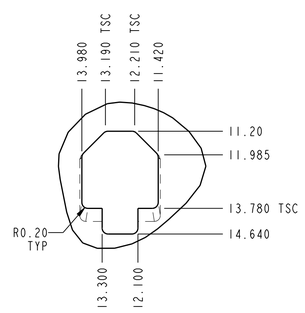

DETAIL W
SCALE 10:1

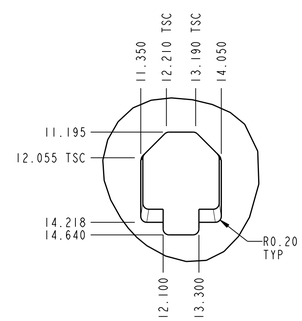

DETAIL X
SCALE 10:1

CRIMP REQUIREMENTS:

1. CRIMP STRAIGHTNESS MUST MEET THE REQUIREMENTS AS DESCRIBED ON SHEET 1
2. THE CRIMPED TERMINAL MUST FIT FREELY INTO THE CHECKING AID AS SHOWN ON THIS PAGE
3. FOR OTHER MECHANICAL REQUIREMENTS ON CRIMPED TERMINALS REFER TO SAE/USCAR-21 (5-13-02) SECTIONS; 4.2 (VISUAL INSPECTION), 4.3 (CROSS SECTION ANALYSIS) AND 4.4 (CONDUCTOR CRIMP PULLOUT FORCE)

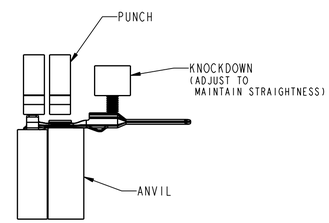

CRIMP TOOLING

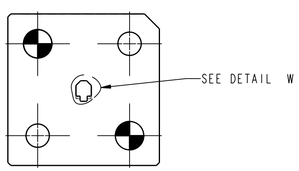

GRIP CAVITY
BACK VIEW

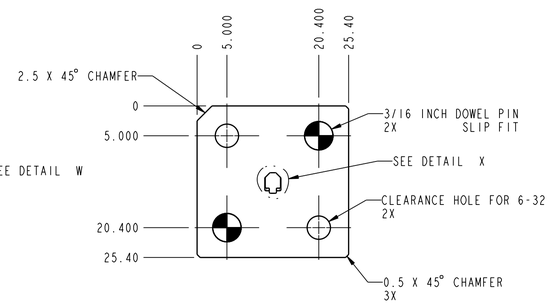

GRIP CAVITY
FRONT VIEW

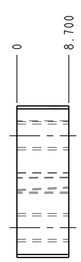

GRIP CAVITY
SIDE VIEW

EC NO: UAU2008-0063
DRWN: L.PULLIAM 2007/07/24
CH'K: A.DHIR 2007/07/25
APPR: B.MOSER 2007/07/31

G4

REV

DESCRIPTION

QUALITY SYMBOLS
▼ =0
(C) =0

GENERAL TOLERANCES (UNLESS SPECIFIED)

	mm	INCH
4 PLACES	± --	± --
3 PLACES	± 0.005	± --
2 PLACES	± 0.03	± --
1 PLACE	± 0.3	± --
ANGULAR	± 3°	

SCALE 2:1

DESIGN UNITS mm

DIMENSION STYLE mm

DRAWN BY	DATE
D.GRIFFITHS	6/15/99
CHECKED BY	DATE
D.G./V.P.	7/28/99
APPROVED BY	DATE
V.PURUSHOTHAMAN	7/28/99

THIRD ANGLE PROJECTION

REVISE ON CAD ONLY

TITLE
BLADE, SHORTING BAR TERMINAL
MX150

MOLEX INCORPORATED

MATERIAL NO. SEE CHART

DOCUMENT NO. SD-31296-001

SHEET NO. 2 OF 2

THIS DRAWING CONTAINS INFORMATION THAT IS PROPRIETARY TO MOLEX INCORPORATED AND SHOULD NOT BE USED WITHOUT WRITTEN PERMISSION

D