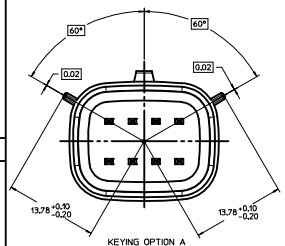

KEYING OPTION A
SCALE 4:1

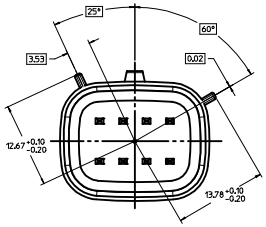

KEYING OPTION B
SCALE 4:1

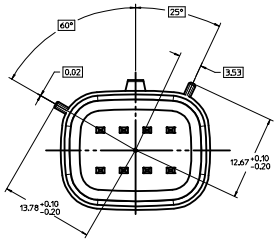

KEYING OPTION C
SCALE 4:1

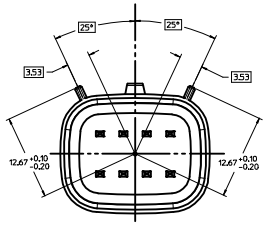

KEYING OPTION D
SCALE 4:1

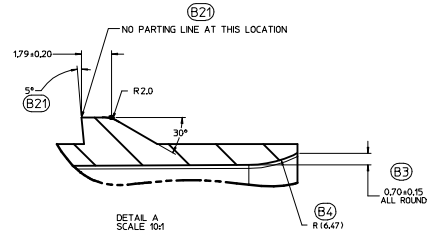

DETAIL A
SCALE 10:1

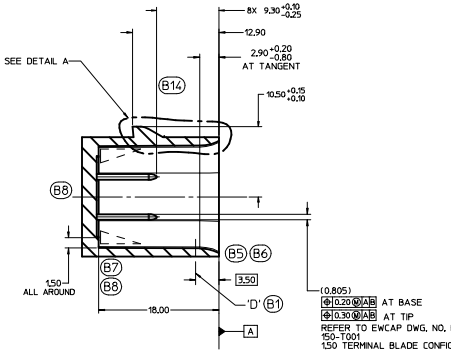

SECTION A-A

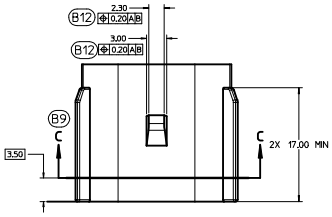

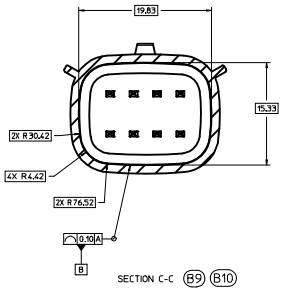

SECTION C-C B9 B10

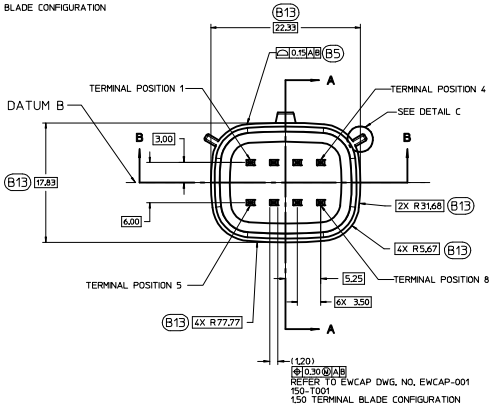

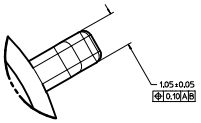

DETAIL C
SCALE 20:1
APPLIES 2X
SEE KEYING OPTION VIEWS
FOR POSITIONS

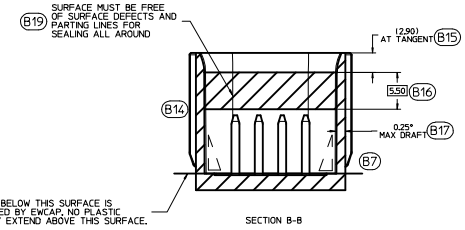

SECTION B-B

IF HEADER IS RECESSED INTO A POCKET, THESE DIMENSIONS REPRESENT
THE MINIMUM CLEARANCE REQUIRED FOR THE MATING CONNECTOR SHROUD.

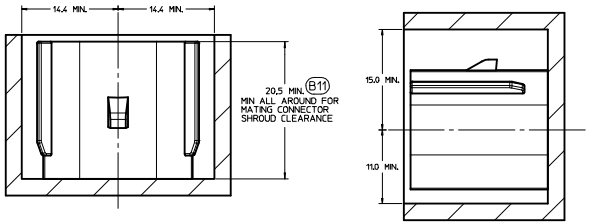

PACKAGING FRAME

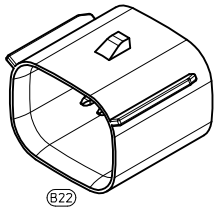

NOTICE

THIS DRAWING OR PORTIONS OF IT, ARE CONTROLLED BY THE ELECTRICAL WIRING COMPONENTS APPLICATION PARTNERSHIP (EWCAP). A SUBGROUP OF THE UNITED STATES CONSORTIUM FOR AUTOMOTIVE RESEARCH LLC (USCAR). USCAR IS A PARTNERSHIP BETWEEN CHRYSLER GROUP LLC, FORD MOTOR COMPANY, AND GENERAL MOTORS CORPORATION ANY CHANGE TO A EWCAP CONTROLLED PORTION OF THIS DRAWING, INCLUDING A "RECORD CHANGE" MUST BE APPROVED, IN WRITING, BY THE RESPONSIBLE EWCAP MEMBER FROM EACH USCAR COMPANY. EACH EWCAP MEMBER AUTHORIZED TO SIGN FOR HIS OR HER COMPANY IS RESPONSIBLE FOR OBTAINING ALL NECESSARY APPROVALS WITHIN THAT COMPANY PRIOR TO SIGNING FOR APPROVAL OF THE CHANGE. EWCAP EXPRESSLY PROHIBITS ANY PARTY FROM CHANGING EITHER ANY EWCAP CONTROLLED PORTION OF THIS DRAWING OR ANY ASSOCIATED TOOLING BEFORE RECEIVING AN APPROVAL SIGNED BY AN AUTHORIZED REPRESENTATIVE FROM EACH EWCAP PARTNER. REFERENCE TO THE SIGNED APPROVAL FORM MUST BE ENTERD IN THIS DRAWING'S CONTROL COLUMN. B20

NOTES: UNLESS OTHERWISE SPECIFIED B18

1. ALL DIMENSIONS SHOWN IN MILLIMETERS.
2. DIMENSIONING AND TOLERANCING PER ASME Y14.5M-1994
3. 0.25 RADII ON ALL CORNERS SHOWN SHARP.
4. UNSPECIFIED RADII: 0.25 EXCEPT AS NOTED.
5. STANDARD COLORS FOR POLARIZATION (SEE CHART). DEVIATION REQUIRES APPROVAL OF AUTHORIZED PERSON.
6. REFER TO "SAE/USCAR 12 CONNECTOR GUIDELINES" FOR ADDITIONAL REQUIREMENTS.
7. EXCEPT WHERE NOTED, DRAFT ON OUTSIDE SURFACES IS PERMISSIBLE WITHIN TOLERANCE.
8. ⌯ SYMBOL INDICATES DRAFT DIRECTION.
9. FOR TERMINAL MATERIAL, DIMENSIONAL, AND COATING REQUIREMENTS AND ANY BLADE TERMINAL DESIGN INFORMATION NOT SHOWN ON THIS DRAWING SEE EWCAP DRW. NO. EWCAP-001
10. A FULL SHROUD ON THE MATING CONNECTOR IS REQUIRED TO INSURE THAT THE CONNECTOR-HEADER POLARIZATION FEATURES (OPTIONS A THRU D) WILL FUNCTION. THE FULL SHROUD ALSO PREVENTS SCOOP DAMAGE TO THE HEADER PINS. REFER TO "SAE/USCAR-12 CONNECTOR DESIGN GUIDE LINES" FOR ADDITIONAL INFORMATION.
11. REFER TO USCAR/EWCAP PART LIST AS FOUND ON WEBSITE http://www.uscarteams.org
12. THIS IS A 100% CAD GENERATED PART. THE CAD MATHEMATICAL DATA IS THE MASTER FOR THIS PART. FOR DIMENSIONAL OR ANY INFORMATION NOT SHOWN ON THIS DRAWING, ANALYZE THE CAD MODEL.

B2

EWCAP P/N	OPTION	MATING CONNECTOR COLOR
150-S-008-2-D02	D	BLACK
150-S-008-2-C02	C	DK GRAY
150-S-008-2-B02	B	LT GRAY
150-S-008-2-A02	A	BLACK

CHANGE SERIAL NUMBER	LET	REVISION RECORD	DATE	DWN	CHK
095	B22	CHANGED ISO VIEW SCALE TO 4:1, WAS 1:1			
095	B21	ADDED PARTING LINE NOTE TO DETAIL A, REMOVED NOTE BACK ANGLE OPTIONAL FROM 5°			
095	B20	CORRECTED CHRYSLER GROUP LLC NOMENCLATURE			
095	B19	MOVED NOTE TO SECTION B-B			
095	B18	UPDATED NOTES			
095	B17	ADDED 0.25° MAX DRAFT ANGLE ALL AROUND			
095	B16	ADDED 5.50			
095	B15	ADDED AT TANGENT NOTE			
095	B14	REMOVED DATUM D			
095	B13	ADDED BASIC DIMENSIONS FOR PROFILE CONTROL			
095	B12	ADDED 0.20 A B			
095	B11	DIMENSIONED TO DATUM A			
095	B10	SEALING SURFACE DIMENSIONS MOVED TO SECTION C-C			
095	B9	ADDED SECTION C-C			
095	B8	REMOVED 15.20 AND 2.50 FROM SECTION A-A			
095	B7	ADDED DRAFT ANGLE DIRECTION			
095	B6	REMOVED 0.80 +0.10/-0.20 ALL AROUND			
095	B5	REPLACED WALL THICKNESS CONTROL WITH PROFILE OF A SURFACE			
095	B4	ADDED R(6.47)			
095	B3	ADDED 0.70 ±0.15 ALL AROUND			
095	B2	UPDATED CONNECTOR COLORS			
095	B1	SURFACE 'D' RELOCATED TO 3.50 WAS AT 8.20	03-21-12	KC	MV
	A	RELEASED	10-17-07	MV	DG

TOLERANCES (UNLESS OTHERWISE SPECIFIED)
DIMENSIONS ARE IN MILLIMETERS
ANGLES ±3°
.X ±0.2 .XX ±0.10

THIRD ANGLE PROJECTION

EWCAP

SCALE	DRAWN BY	CHECKED BY	DATE
4:1	K.CUNNINGHAM	M.VANSLAMBROUCK	03-21-12

TITLE
DIRECT CONNECT INTERFACE
8 WAY (2 X 4) 1.5 MM SEALED MALE

SHEET	DRAWING NUMBER	SIZE	DO NOT SCALE DRAWING COMPUTER AIDED DRAWING	REVISION LEVEL
1 OF 1	150-S-008-2-Z02	E		B

molex

MX150 RECEPTACLE 2X2 SEALED ASSEMBLY MAT SEAL
BOM AND PIN OUT SHEET

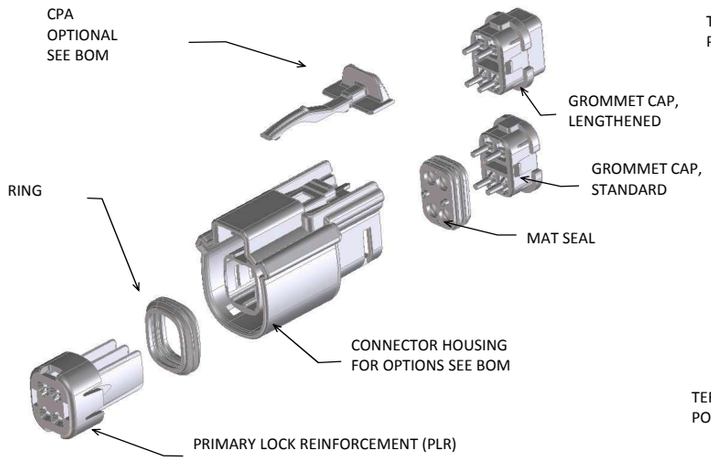

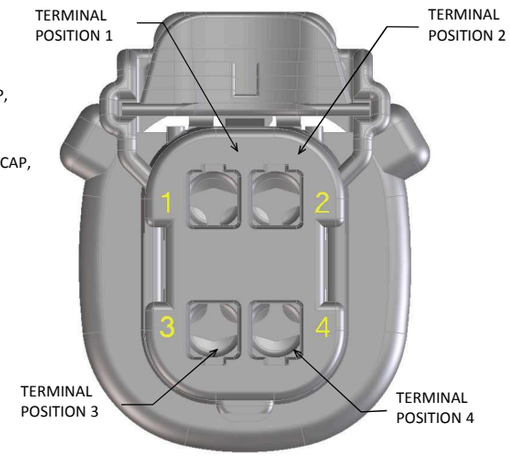

ABBREVIATION	DESCRIPTION	COLOR	MATERIAL
A-BLK	HOUSING, KEYING OPTION A	BLACK	SPS/NYLON GF20
B-LG	HOUSING, KEYING OPTION B	LIGHT GRAY	SPS/NYLON GF20
C-BR	HOUSING, KEYING OPTION C	BROWN	SPS/NYLON GF20
D-GR	HOUSING, KEYING OPTION D	GREEN	SPS/NYLON GF20
C-DG	HOUSING, KEYING OPTION C	DARK GRAY	SPS/NYLON GF20
D-SG	HOUSING, KEYING OPTION D	STONE GRAY	SPS/NYLON GF20
A-YW	HOUSING, KEYING OPTION A	YELLOW	SPS/NYLON GF20
A-BLK-CLIP	HOUSING, KEYING OPTION A WITH CLIPSLOT	BLACK	SPS/NYLON GF20
B-LG-CLIP	HOUSING, KEYING OPTION B WITH CLIPSLOT	LIGHT GRAY	SPS/NYLON GF20
C-DG-CLIP	HOUSING, KEYING OPTION C WITH CLIPSLOT	DARK GRAY	SPS/NYLON GF20
D-SG-CLIP	HOUSING, KEYING OPTION D WITH CLIPSLOT	STONE GRAY	SPS/NYLON GF20
A-YW-CLIP	HOUSING, KEYING OPTION A WITH CLIPSLOT	YELLOW	SPS/NYLON GF20
GCP	GROMMET CAP (STANDARD PLUGGED)	BLACK	SPS/NYLON GF20
GCO	GROMMET CAP (STANDARD OPEN)	BLACK	SPS/NYLON GF20
GCLP	GROMMET CAP (LENGTHENED PLUGGED)	BLACK	SPS/NYLON GF20
GCLO	GROMMET CAP (LENGTHENED OPEN)	BLACK	SPS/NYLON GF20
PLR	PLR	NATURAL	SPS/NYLON GF20
CPA	CPA	RED	PBT GF30
M	MAT SEAL	RUST RED	INHERENTLY LUBRICATED SILICONE
R	RING SEAL	GREEN	INHERENTLY LUBRICATED SILICONE

FOR ADDITIONAL INFORMATION SEE SD-33472-0001

ASSEMBLY DESCRIPTION	ASSEMBLY PART NUMBER	COMPONENT						BLOCKED TERMINALS											STATUS	COMMENTS	OPTIONAL ATTATCHMENTS SOLD SEPERATELY	
		THE PRESENCE OF AN ABBREVIATION INDICATES THE PRESENCE OF THAT COMPONENT.						CAVITY WITH A NUMBER INDICATES BLOCKED TERMINAL POSITION CAVITY WITHOUT A NUMBER INDICATES OPEN TERMINAL POSITION														
		HOUSING KEY/COLOR	GROMMET CAP	PLR	CPA	MAT SEAL	RING SEAL	1	2	3	4										BACKSHELL WITH RIBS	BACKSHELL WITHOUT RIBS
KEY A, BLACK, W/O CPA	33472-4001	A-BLK	GCO	PLR		M	R												SALEABLE			
KEY B, LIGHT GRAY, W/O CPA	33472-4002	B-LG	GCO	PLR		M	R												SALEABLE			
KEY C, BROWN, W/O CPA	33472-4003	C-BR	GCO	PLR		M	R												NOT RECOMMENDED	SEE 33472-4042		
KEY D, GREEN, W/O CPA	33472-4004	D-GR	GCO	PLR		M	R												NOT RECOMMENDED	SEE 33472-4043		
KEY A, BLACK, W/CPA	33472-4006	A-BLK	GCO	PLR	CPA	M	R												SALEABLE			
KEY B, LIGHT GRAY, W/CPA	33472-4007	B-LG	GCO	PLR	CPA	M	R												SALEABLE			
KEY C, BROWN, W/CPA	33472-4008	C-BR	GCO	PLR	CPA	M	R												NOT RECOMMENDED	SEE 33472-4044		
KEY D, GREEN, W/CPA	33472-4009	D-GR	GCO	PLR	CPA	M	R												NOT RECOMMENDED	SEE 33472-4045		
KEY A, BLACK, W/O CPA	33472-4031	A-BLK	GCP	PLR		M	R	1	2	3	4								SALEABLE			
KEY B, LIGHT GRAY, W/O CPA	33472-4032	B-LG	GCP	PLR		M	R	1	2	3	4								SALEABLE			
KEY C, BROWN, W/O CPA	33472-4033	C-BR	GCP	PLR		M	R	1	2	3	4								NOT RECOMMENDED	SEE 33472-4046		
KEY D, GREEN, W/O CPA	33472-4034	D-GR	GCP	PLR		M	R	1	2	3	4								NOT RECOMMENDED	SEE 33472-4047		
KEY A, BLACK, W/O CPA	33472-4101	A-BLK	GCLO	PLR		M	R												SALEABLE			
KEY B, LIGHT GRAY, W/O CPA	33472-4102	B-LG	GCLO	PLR		M	R												SALEABLE			
KEY C, DARK GRAY, W/O CPA	33472-4103	C-DG	GCLO	PLR		M	R												SALEABLE			
KEY D, STONE GRAY, W/O CPA	33472-4104	D-SG	GCLO	PLR		M	R												SALEABLE			
KEY A, BLACK, W/CPA	33472-4105	A-BLK	GCLO	PLR	CPA	M	R												SALEABLE			
KEY B, LIGHT GRAY, W/CPA	33472-4106	B-LG	GCLO	PLR	CPA	M	R												SALEABLE			
KEY C, DARK GRAY, W/CPA	33472-4107	C-DG	GCLO	PLR	CPA	M	R												SALEABLE			
KEY D, STONE GRAY, W/CPA	33472-4108	D-SG	GCLO	PLR	CPA	M	R												SALEABLE			
KEY A, BLACK, W/O CPA	33472-4109	A-BLK	GCLP	PLR		M	R	1	2	3	4								SALEABLE			
KEY B, LIGHT GRAY, W/O CPA	33472-4110	B-LG	GCLP	PLR		M	R	1	2	3	4								SALEABLE			
KEY C, DARK GRAY, W/O CPA	33472-4111	C-DG	GCLP	PLR		M	R	1	2	3	4								SALEABLE			
KEY D, STONE GRAY, W/O CPA	33472-4112	D-SG	GCLP	PLR		M	R	1	2	3	4								SALEABLE			
OBSOLETE	33472-4113																		OBSOLETE			
OBSOLETE	33472-4114																		OBSOLETE			
OBSOLETE	33472-4115																		OBSOLETE			
OBSOLETE	33472-4116																		OBSOLETE			
OBSOLETE	33472-4117																		OBSOLETE			
KEY A, BLACK, W/O CPA	33472-4035	A-BLK	GCP	PLR		M	R		2	3									SALEABLE			
KEY A, BLACK, W/O CPA	33472-4036	A-BLK	GCP	PLR		M	R	1	2	3									SALEABLE			
KEY A, BLACK, W/O CPA	33472-4037	A-BLK	GCP	PLR		M	R			3	4								SALEABLE			
KEY A, BLACK, W/O CPA	33472-4038	A-BLK	GCP	PLR		M	R			3									SALEABLE			
KEY A, BLACK, W/O CPA	33472-4039	A-BLK	GCP	PLR		M	R				4								SALEABLE			
KEY A, BLACK, W/O CPA	33472-4040	A-BLK	GCP	PLR		M	R		2										SALEABLE			

molex

MX150 RECEPTACLE 2X2 SEALED ASSEMBLY MAT SEAL
BOM AND PIN OUT SHEET

ASSEMBLY DESCRIPTION	ASSEMBLY PART NUMBER	COMPONENT						BLOCKED TERMINALS											STATUS	COMMENTS	OPTIONAL ATTATCHMENTS SOLD SEPERATELY	
		THE PRESENCE OF AN ABBREVIATION INDICATES THE PRESENCE OF THAT COMPONENT.						CAVITY WITH A NUMBER INDICATES BLOCKED TERMINAL POSITION CAVITY WITHOUT A NUMBER INDICATES OPEN TERMINAL POSITION														
		HOUSING KEY/COLOR	GROMMET CAP	PLR	CPA	MAT SEAL	RING SEAL	1	2	3	4										BACKSHELL WITH RIBS	BACKSHELL WITHOUT RIBS
KEY A, BLACK, W/O CPA	33472-4041	A-BLK	GCP	PLR		M	R	1	2										SALEABLE			
KEY C, DARK GRAY, W/O CPA	33472-4042	C-DG	GCO	PLR		M	R												SALEABLE			
KEY D, STONE GRAY, W/O CPA	33472-4043	D-SG	GCO	PLR		M	R												SALEABLE			
KEY C, DARK GRAY, W/CPA	33472-4044	C-DG	GCO	PLR	CPA	M	R												SALEABLE			
KEY D, STONE GRAY, W/CPA	33472-4045	D-SG	GCO	PLR	CPA	M	R												SALEABLE			
KEY C, DARK GRAY, W/O CPA	33472-4046	C-DG	GCP	PLR		M	R	1	2	3	4								SALEABLE			
KEY D, STONE GRAY, W/O CPA	33472-4047	D-SG	GCP	PLR		M	R	1	2	3	4								SALEABLE			
KEY A, BLACK, W/O CPA	33472-4048	A-BLK	GCP	PLR		M	R		2		4								SALEABLE			
KEY A, BLACK, W/CPA	33472-4049	A-BLK	GCP	PLR	CPA	M	R		2										SALEABLE			
KEY A, BLACK, W/CPA	33472-4050	A-BLK	GCP	PLR	CPA	M	R			3									SALEABLE			
KEY A, BLACK, W/CPA	33472-4051	A-BLK	GCP	PLR	CPA	M	R				4								SALEABLE			
KEY A, BLACK, W/O CPA	33472-4052	A-BLK	GCP	PLR		M	R		2		4								SALEABLE			
KEY A, YELLOW, W/CPA	33472-4053	A-YW	GCO	PLR	CPA	M	R												SALEABLE			
KEY A, BLACK, W/O CPA	33472-4054	A-BLK	GCP	PLR		M	R	1		3									SALEABLE			
KEY B, LIGHT GRAY, W/CPA	33472-4055	B-LG	GCP	PLR	CPA	M	R	1											SALEABLE			
KEY A, BLACK, W/O CPA	33472-4056	A-BLK	GCP	PLR		M	R	1											SALEABLE			
KEY A, BLACK, WITH CLIPSLOT, W/O CPA	33472-0501	A-BLK-CLIP	GCO	PLR		M	R												DESIGN RELEASE			
KEY B, LIGHT GRAY, WITH CLIPSLOT, W/O CPA	33472-0502	B-LG-CLIP	GCO	PLR		M	R												DESIGN RELEASE			
KEY C, DARK GRAY, WITH CLIPSLOT, W/O CPA	33472-0503	C-DG-CLIP	GCO	PLR		M	R												DESIGN RELEASE			
KEY D, STONE GRAY, WITH CLIPSLOT, W/O CPA	33472-0504	D-SG-CLIP	GCO	PLR		M	R												DESIGN RELEASE			
KEY A, YELLOW, WITH CLIPSLOT, W/O CPA	33472-0505	A-YW-CLIP	GCO	PLR		M	R												DESIGN RELEASE			
KEY A, BLACK, WITH CLIPSLOT, W/CPA	33472-0506	A-BLK-CLIP	GCO	PLR	CPA	M	R												DESIGN RELEASE			
KEY B, LIGHT GRAY, WITH CLIPSLOT, W/CPA	33472-0507	B-LG-CLIP	GCO	PLR	CPA	M	R												DESIGN RELEASE			
KEY C, DARK GRAY, WITH CLIPSLOT, W/CPA	33472-0508	C-DG-CLIP	GCO	PLR	CPA	M	R												DESIGN RELEASE			
KEY D, STONE GRAY, WITH CLIPSLOT, W/CPA	33472-0509	D-SG-CLIP	GCO	PLR	CPA	M	R												DESIGN RELEASE			
KEY A, YELLOW, WITH CLIPSLOT, W/CPA	33472-0510	A-YW-CLIP	GCO	PLR	CPA	M	R												DESIGN RELEASE			

molex

MX150 RECEPTACLE 2X3 SEALED ASSEMBLY MAT SEAL
BOM AND PIN OUT SHEET

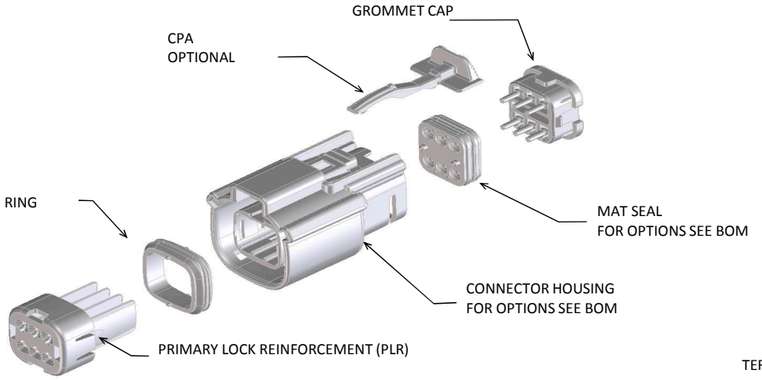

FOR ADDITIONAL INFORMATION SEE SD-33472-0001

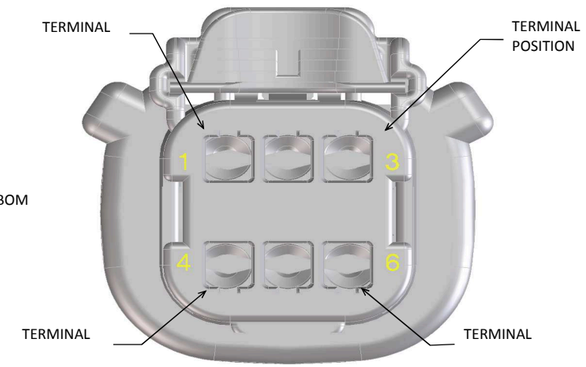

ABBREVIATION	DESCRIPTION	COLOR	MATERIAL
A-BLK	HOUSING, KEYING OPTION A	BLACK	SPS/NYLON GF20
B-LG	HOUSING, KEYING OPTION B	LIGHT GRAY	SPS/NYLON GF20
C-BR	HOUSING, KEYING OPTION C	BROWN	SPS/NYLON GF20
D-GR	HOUSING, KEYING OPTION D	GREEN	SPS/NYLON GF20
C-DG	HOUSING, KEYING OPTION C	DARK GRAY	SPS/NYLON GF20
D-SG	HOUSING, KEYING OPTION D	STONE GRAY	SPS/NYLON GF20
A-YW	HOUSING, KEYING OPTION A	YELLOW	SPS/NYLON GF20
A-BLK-CLIP	HOUSING, KEYING OPTION A WITH CLIPSLOT	BLACK	SPS/NYLON GF20
B-LG-CLIP	HOUSING, KEYING OPTION B WITH CLIPSLOT	LIGHT GRAY	SPS/NYLON GF20
C-BR-CLIP	HOUSING, KEYING OPTION C WITH CLIPSLOT	BROWN	SPS/NYLON GF20
D-GR-CLIP	HOUSING, KEYING OPTION D WITH CLIPSLOT	GREEN	SPS/NYLON GF20
C-DG-CLIP	HOUSING, KEYING OPTION C WITH CLIPSLOT	DARK GRAY	SPS/NYLON GF20
D-SG-CLIP	HOUSING, KEYING OPTION D WITH CLIPSLOT	STONE GRAY	SPS/NYLON GF20
A-SG-CLIP	HOUSING, KEYING OPTION A WITH CLIPSLOT	YELLOW	SPS/NYLON GF20
GC	GROMMET CAP	BLACK	SPS/NYLON GF20
PLR	PLR	NATURAL	SPS/NYLON GF20
CPA	CPA	RED	PBT GF30
M	MAT SEAL	LIGHT BLUE	INHERENTLY LUBRICATED SILICONE
R	RING SEAL	RUST RED	INHERENTLY LUBRICATED SILICONE

ASSEMBLY DESCRIPTION	ASSEMBLY PART NUMBER	COMPONENT						BLOCKED TERMINALS						STATUS	COMMENTS	OPTIONAL ATTATCHMENTS SOLD SEPERATELY	
		THE PRESENCE OF AN ABBREVIATION INDICATES THE PRESENCE OF THAT COMPONENT.						CAVITY WITH A NUMBER INDICATES BLOCKED TERMINAL POSITION CAVITY WITHOUT A NUMBER INDICATES OPEN TERMINAL POSITION									
		HOUSING KEY/COLOR	GROMMET CAP	PLR	CPA	MAT SEAL	RING SEAL	1	2	3	4	5	6			BACKSHELL WITH RIBS	BACKSHELL WITHOUT RIBS
KEY A, BLACK, W/O CPA	33472-0601	A-BLK	GC	PLR		M	R							SALEABLE		34951-0610	34951-0620
KEY B, LIGHT GRAY, W/O CPA	33472-0602	B-LG	GC	PLR		M	R							SALEABLE		34951-0610	34951-0620
KEY C, BROWN, W/O CPA	33472-0603	C-BR	GC	PLR		M	R							NOT RECOMMENDED	SEE P/N 33472-0669	34951-0610	34951-0620
KEY D, GREEN, W/O CPA	33472-0604	D-GR	GC	PLR		M	R							NOT RECOMMENDED	SEE P/N 33472-0668	34951-0610	34951-0620
VOID KEY	33472-0605																
KEY A, BLACK, W/CPA	33472-0606	A-BLK	GC	PLR	CPA	M	R							SALEABLE		34951-0610	34951-0620
KEY B, LIGHT GRAY, W/CPA	33472-0607	B-LG	GC	PLR	CPA	M	R							SALEABLE		34951-0610	34951-0620
KEY C, BROWN, W/CPA	33472-0608	C-BR	GC	PLR	CPA	M	R							NOT RECOMMENDED	SEE P/N 33472-0670	34951-0610	34951-0620
KEY D, GREEN, W/CPA	33472-0609	D-GR	GC	PLR	CPA	M	R							NOT RECOMMENDED	SEE P/N 33472-0671	34951-0610	34951-0620
VOID KEY	33472-0610																
KEY A, BLACK, W/O CPA	33472-0611	A-BLK	GC	PLR		M	R			3				SALEABLE	SAME AS P/N 33472-0658	34951-0610	34951-0620
KEY B, LIGHT GRAY, W/O CPA	33472-0612	B-LG	GC	PLR		M	R			3				SALEABLE		34951-0610	34951-0620
KEY C, BROWN, W/O CPA	33472-0613	C-BR	GC	PLR		M	R			3				NOT RECOMMENDED		34951-0610	34951-0620
KEY D, GREEN, W/O CPA	33472-0614	D-GR	GC	PLR		M	R			3				NOT RECOMMENDED		34951-0610	34951-0620
VOID KEY	33472-0615																
KEY A, BLACK, W/CPA	33472-0616	A-BLK	GC	PLR	CPA	M	R			3				SALEABLE		34951-0610	34951-0620
KEY B, LIGHT GRAY, W/CPA	33472-0617	B-LG	GC	PLR	CPA	M	R			3				SALEABLE		34951-0610	34951-0620
KEY C, BROWN, W/CPA	33472-0618	C-BR	GC	PLR	CPA	M	R			3				NOT RECOMMENDED		34951-0610	34951-0620
KEY D, GREEN, W/CPA	33472-0619	D-GR	GC	PLR	CPA	M	R			3				NOT RECOMMENDED		34951-0610	34951-0620
VOID KEY	33472-0620																
KEY A, BLACK, W/O CPA	33472-0621	A-BLK	GC	PLR		M	R			3	4			SALEABLE		34951-0610	34951-0620
KEY B, LIGHT GRAY, W/O CPA	33472-0622	B-LG	GC	PLR		M	R			3	4			SALEABLE		34951-0610	34951-0620
KEY C, BROWN, W/O CPA	33472-0623	C-BR	GC	PLR		M	R			3	4			NOT RECOMMENDED		34951-0610	34951-0620
KEY D, GREEN, W/O CPA	33472-0624	D-GR	GC	PLR		M	R			3	4			NOT RECOMMENDED		34951-0610	34951-0620
VOID KEY	33472-0625																
KEY A, BLACK, W/CPA	33472-0626	A-BLK	GC	PLR	CPA	M	R			3	4			SALEABLE		34951-0610	34951-0620
KEY B, LIGHT GRAY, W/CPA	33472-0627	B-LG	GC	PLR	CPA	M	R			3	4			SALEABLE		34951-0610	34951-0620
KEY C, BROWN, W/CPA	33472-0628	C-BR	GC	PLR	CPA	M	R			3	4			NOT RECOMMENDED		34951-0610	34951-0620
KEY D, GREEN, W/CPA	33472-0629	D-GR	GC	PLR	CPA	M	R			3	4			NOT RECOMMENDED		34951-0610	34951-0620
VOID KEY	33472-0630																
KEY A, BLACK, W/O CPA, W/O MAT SEAL	33472-0631	A-BLK	GC	PLR			R								NOT VALIDATED	34951-0610	34951-0620
KEY B, LIGHT GRAY, W/O CPA, W/O MAT SEAL	33472-0632	B-LG	GC	PLR			R								NOT VALIDATED	34951-0610	34951-0620
KEY C, BROWN, W/O CPA, W/O MAT SEAL	33472-0633	C-BR	GC	PLR			R							NOT RECOMMENDED	NOT VALIDATED	34951-0610	34951-0620
KEY D, GREEN, W/O CPA, W/O MAT SEAL	33472-0634	D-GR	GC	PLR			R							NOT RECOMMENDED	NOT VALIDATED	34951-0610	34951-0620
VOID KEY	33472-0635																
KEY A, BLACK, W/O CPA	33472-0636	A-BLK	GC	PLR		M	R	1	2	3	4	5	6	SALEABLE		34951-0610	34951-0620
KEY B, LIGHT GRAY, W/O CPA	33472-0637	B-LG	GC	PLR		M	R	1	2	3	4	5	6	SALEABLE		34951-0610	34951-0620
KEY C, BROWN, W/O CPA	33472-0638	C-BR	GC	PLR		M	R	1	2	3	4	5	6	NOT RECOMMENDED		34951-0610	34951-0620
KEY D, GREEN, W/O CPA	33472-0639	D-GR	GC	PLR		M	R	1	2	3	4	5	6	NOT RECOMMENDED		34951-0610	34951-0620
VOID KEY	33472-0640																
KEY A, BLACK, W/O CPA	33472-0641	A-BLK	GC	PLR		M	R		2	3	4	5		SALEABLE		34951-0610	34951-0620
KEY A, BLACK, W/O CPA	33472-0642	A-BLK	GC	PLR		M	R				4			SALEABLE		34951-0610	34951-0620
KEY A, BLACK, W/CPA	33472-0643	A-BLK	GC	PLR	CPA	M	R	1		3	4			SALEABLE		34951-0610	34951-0620
KEY B, LIGHT GRAY, W/CPA	33472-0644	B-LG	GC	PLR	CPA	M	R	1		3	4			SALEABLE		34951-0610	34951-0620
KEY C, BROWN, W/CPA	33472-0645	C-BR	GC	PLR	CPA	M	R	1		3	4			NOT RECOMMENDED		34951-0610	34951-0620
KEY D, GREEN, W/CPA	33472-0646	D-GR	GC	PLR	CPA	M	R	1		3	4			NOT RECOMMENDED		34951-0610	34951-0620
VOID KEY	33472-0647																
KEY A, BLACK, W/O CPA	33472-0648	A-BLK	GC	PLR		M	R	1		3	4		6	SALEABLE		34951-0610	34951-0620
KEY B, LIGHT GRAY, W/O CPA	33472-0649	B-LG	GC	PLR		M	R	1		3	4		6	SALEABLE		34951-0610	34951-0620
KEY C, BROWN, W/O CPA	33472-0650	C-BR	GC	PLR		M	R	1		3	4		6	NOT RECOMMENDED		34951-0610	34951-0620
KEY D, GREEN, W/O CPA	33472-0651	D-GR	GC	PLR		M	R	1		3	4		6	NOT RECOMMENDED		34951-0610	34951-0620
VOID KEY	33472-0652																
KEY A, BLACK, W/CPA	33472-0653	A-BLK	GC	PLR	CPA	M	R	1		3	4		6	SALEABLE		34951-0610	34951-0620
KEY B, LIGHT GRAY, W/CPA	33472-0654	B-LG	GC	PLR	CPA	M	R	1		3	4		6	SALEABLE		34951-0610	34951-0620
KEY C, BROWN, W/CPA	33472-0655	C-BR	GC	PLR	CPA	M	R	1		3	4		6	NOT RECOMMENDED		34951-0610	34951-0620
KEY D, GREEN, W/CPA	33472-0656	D-GR	GC	PLR	CPA	M	R	1		3	4		6	NOT RECOMMENDED		34951-0610	34951-0620
VOID KEY	33472-0657																
KEY A, BLACK, W/O CPA	33472-0658	A-BLK	GC	PLR		M	R			3				SALEABLE		34951-0610	34951-0620

MX150 RECEPTACLE 2X3 SEALED ASSEMBLY MAT SEAL
BOM AND PIN OUT SHEET

ASSEMBLY DESCRIPTION	ASSEMBLY PART NUMBER	COMPONENT						BLOCKED TERMINALS						STATUS	COMMENTS	OPTIONAL ATTATCHMENTS SOLD SEPERATELY	
		THE PRESENCE OF AN ABBREVIATION INDICATES THE PRESENCE OF THAT COMPONENT.						CAVITY WITH A NUMBER INDICATES BLOCKED TERMINAL POSITION CAVITY WITHOUT A NUMBER INDICATES OPEN TERMINAL POSITION									
		HOUSING KEY/COLOR	GROMMET CAP	PLR	CPA	MAT SEAL	RING SEAL	1	2	3	4	5	6			BACKSHELL WITH RIBS	BACKSHELL WITHOUT RIBS
KEY A, BLACK, W/O CPA	33472-0659	A-BLK	GC	PLR		M	R			3		5	6	SALEABLE		34951-0610	34951-0620
KEY A, BLACK, W/CPA	33472-0660	A-BLK	GC	PLR	CPA	M	R	1	2	3	4	5	6	SALEABLE		34951-0610	34951-0620
KEY A, BLACK, W/O CPA	33472-0661	A-BLK	GC	PLR		M	R		2					SALEABLE		34951-0610	34951-0620
KEY A, BLACK, W/O CPA	33472-0662	A-BLK	GC	PLR		M	R		2			5		SALEABLE		34951-0610	34951-0620
KEY A, BLACK, W/O CPA	33472-0663	A-BLK	GC	PLR		M	R					5	6	SALEABLE		34951-0610	34951-0620
KEY A, BLACK, W/O CPA	33472-0664	A-BLK	GC	PLR		M	R				4	5	6	SALEABLE		34951-0610	34951-0620
KEY A, BLACK, W/O CPA	33472-0665	A-BLK	GC	PLR		M	R	1						SALEABLE		34951-0610	34951-0620
KEY A, BLACK, W/O CPA	33472-0666	A-BLK	GC	PLR		M	R		2			5	6	SALEABLE		34951-0610	34951-0620
KEY A, BLACK, W/O CPA	33472-0667	A-BLK	GC	PLR		M	R	1		3		5	6	SALEABLE		34951-0610	34951-0620
KEY C, DARK GRAY, W/O CPA	33472-0668	C-DG	GC	PLR		M	R							SALEABLE		34951-0610	34951-0620
KEY D, STONE GRAY, W/O CPA	33472-0669	D-SG	GC	PLR		M	R							SALEABLE		34951-0610	34951-0620
KEY C, DARK GRAY, W/CPA	33472-0670	C-DG	GC	PLR	CPA	M	R							SALEABLE		34951-0610	34951-0620
KEY D, STONE GRAY, W/CPA	33472-0671	D-SG	GC	PLR	CPA	M	R							SALEABLE		34951-0610	34951-0620
KEY B, LIGHT GRAY, W/O CPA	33472-0672	B-LG	GC	PLR		M	R					5		SALEABLE		34951-0610	34951-0620
KEY A, BLACK, W/O CPA	33472-0673	A-BLK	GC	PLR		M	R						6	SALEABLE		34951-0610	34951-0620
KEY A, BLACK, W/CPA	33472-0674	A-BLK	GC	PLR	CPA	M	R					5	6	SALEABLE		34951-0610	34951-0620
KEY A, BLACK, W/CPA	33472-0675	A-BLK	GC	PLR	CPA	M	R						6	SALEABLE		34951-0610	34951-0620
KEY B, LIGHT GRAY, W/CPA	33472-0676	B-LG	GC	PLR	CPA	M	R	1				5		SALEABLE		34951-0610	34951-0620
KEY B, LIGHT GRAY, W/O CPA	33472-0677	B-LG	GC	PLR		M	R	1				5		SALEABLE		34951-0610	34951-0620
KEY B, LIGHT GRAY, W/O CPA	33472-0678	B-LG	GC	PLR		M	R					5	6	SALEABLE		34951-0610	34951-0620
KEY A, BLACK, W/CPA	33472-0679	A-BLK	GC	PLR	CPA	M	R	1	2	3				SALEABLE		34951-0610	34951-0620
KEY A, BLACK, W/O CPA	33472-0680	A-BLK	GC	PLR		M	R	1	2	3				SALEABLE		34951-0610	34951-0620
KEY A, BLACK, W/CPA	33472-0681	A-BLK	GC	PLR	CPA	M	R		2					SALEABLE		34951-0610	34951-0620
KEY A, YELLOW, W/CPA	33472-0682	A-YW	GC	PLR	CPA	M	R							SALEABLE		34951-0610	34951-0620
KEY A, BLACK, W/O CPA	33472-0683	A-BLK	GC	PLR		M	R			3	4	5	6	SALEABLE		34951-0610	34951-0620
KEY A, BLACK, W/CPA	33472-0684	A-BLK	GC	PLR	CPA	M	R		2	3				SALEABLE		34951-0610	34951-0620
KEY B, LIGHT GRAY, W/CPA	33472-0685	B-LG	GC	PLR	CPA	M	R	1	2	3	4	5	6	SALEABLE		34951-0610	34951-0620
KEY B, LIGHT GRAY, W/CPA	33472-0686	B-LG	GC	PLR	CPA	M	R		2	3				SALEABLE		34951-0610	34951-0620
KEY A, BLACK, W/O CPA	33472-0687	A-BLK	GC	PLR		M	R	1		3	4			SALEABLE		34951-0610	34951-0620
KEY A, BLACK, W/CPA	33472-0688	A-BLK	GC	PLR	CPA	M	R				4	5	6	SALEABLE		34951-0610	34951-0620
KEY A, BLACK, W/CPA	33472-0689	A-BLK	GC	PLR	CPA	M	R				4			SALEABLE		34951-0610	34951-0620
KEY B, LIGHT GRAY, W/CPA	33472-0690	B-LG	GC	PLR	CPA	M	R				4			SALEABLE		34951-0610	34951-0620
KEY A, BLACK, W/CPA	33472-0691	A-BLK	GC	PLR	CPA	M	R	1		3		5		SALEABLE		34951-0610	34951-0620
KEY A, BLACK, W/CPA	33472-0692	A-BLK	GC	PLR	CPA	M	R		2		4		6	SALEABLE		34951-0610	34951-0620
KEY A, BLACK, WITH CLIPSLOT, W/O CPA	33472-0701	A-BLK-CLIP	GC	PLR		M	R							SALEABLE			
KEY B, LIGHT GRAY, WITH CLIPSLOT, W/O CPA	33472-0702	B-LG-CLIP	GC	PLR		M	R							SALEABLE			
KEY C, BROWN, WITH CLIPSLOT, W/O CPA	33472-0703	C-BR-CLIP	GC	PLR		M	R							NOT RECOMMENDED--SEE P/N 33472-0714			
KEY D, GREEN, WITH CLIPSLOT, W/O CPA	33472-0704	D-GR-CLIP	GC	PLR		M	R							NOT RECOMMENDED--SEE P/N 33472-0715			
KEY A, BLACK, WITH CLIPSLOT, W/CPA	33472-0705	A-BLK-CLIP	GC	PLR	CPA	M	R							SALEABLE			
KEY B, LIGHT GRAY, WITH CLIPSLOT, W/CPA	33472-0706	B-LG-CLIP	GC	PLR	CPA	M	R							SALEABLE			
KEY C, BROWN, WITH CLIPSLOT, W/CPA	33472-0707	C-BR-CLIP	GC	PLR	CPA	M	R							NOT RECOMMENDED--SEE P/N 33472-0716			
KEY D, GREEN, WITH CLIPSLOT, W/CPA	33472-0708	D-GR-CLIP	GC	PLR	CPA	M	R							NOT RECOMMENDED--SEE P/N 33472-0717			
KEY A, BLACK, WITH CLIPSLOT, W/O CPA	33472-0709	A-BLK-CLIP	GC	PLR		M	R			3				SALEABLE			
KEY A, BLACK, WITH CLIPSLOT, W/O CPA	33472-0710	A-BLK-CLIP	GC	PLR		M	R		2	3	4	5		SALEABLE			
KEY A, BLACK, WITH CLIPSLOT, W/O CPA	33472-0711	A-BLK-CLIP	GC	PLR		M	R					5	6	SALEABLE			
KEY A, BLACK, WITH CLIPSLOT, W/O CPA	33472-0712	A-BLK-CLIP	GC	PLR		M	R			3	4			SALEABLE			
KEY B, LIGHT GRAY, WITH CLIPSLOT, W/O CPA	33472-0713	B-LG-CLIP	GC	PLR		M	R	1				5		SALEABLE			
KEY C, DARK GRAY, WITH CLIPSLOT, W/O CPA	33472-0714	C-DG-CLIP	GC	PLR		M	R							SALEABLE			
KEY D, STONE GRAY, WITH CLIPSLOT, W/O CPA	33472-0715	D-SG-CLIP	GC	PLR		M	R							SALEABLE			
KEY C, DARK GRAY, WITH CLIPSLOT, W/CPA	33472-0716	C-DG-CLIP	GC	PLR	CPA	M	R							SALEABLE			
KEY D, STONE GRAY, WITH CLIPSLOT, W/CPA	33472-0717	D-SG-CLIP	GC	PLR	CPA	M	R							SALEABLE			
KEY A, BLACK, WITH CLIPSLOT, W/O CPA	33472-0718	A-BLK-CLIP	GC	PLR		M	R			3			6	SALEABLE			
KEY B, LIGHT GRAY, WITH CLIPSLOT, W/CPA	33472-0719	B-LG-CLIP	GC	PLR	CPA	M	R	1				5		SALEABLE			
KEY B, LIGHT GRAY, WITH CLIPSLOT, W/O CPA	33472-0720	B-LG-CLIP	GC	PLR		M	R					5		SALEABLE			
KEY C, DARK GRAY, WITH CLIPSLOT, W/O CPA	33472-0721	C-DG-CLIP	GC	PLR		M	R			3				SALEABLE			
KEY A, BLACK, WITH CLIPSLOT, W/O CPA	33472-0722	A-BLK-CLIP	GC	PLR		M	R				4	5	6	SALEABLE			
KEY A, BLACK, WITH CLIPSLOT, W/O CPA	33472-0723	A-BLK-CLIP	GC	PLR		M	R		2	3		5	6	SALEABLE			
KEY A, BLACK, WITH CLIPSLOT, W/O CPA	33472-0724	A-BLK-CLIP	GC	PLR		M	R		2				6	SALEABLE			
KEY A, BLACK, WITH CLIPSLOT, W/O CPA	33472-0725	A-BLK-CLIP	GC	PLR		M	R			3		5	6	SALEABLE			
KEY A, BLACK, WITH CLIPSLOT, W/O CPA	33472-0726	A-BLK-CLIP	GC	PLR		M	R						6	SALEABLE			
KEY A, BLACK, WITH CLIPSLOT, W/O CPA	33472-0727	A-BLK-CLIP	GC	PLR		M	R		2	3	4	5	6	SALEABLE			
KEY A, BLACK, WITH CLIPSLOT, W/O CPA	33472-0728	A-BLK-CLIP	GC	PLR		M	R	1					6	SALEABLE			
KEY A, BLACK, WITH CLIPSLOT, W/O CPA	33472-0729	A-BLK-CLIP	GC	PLR		M	R	1	2	3	4	5	6	SALEABLE			
KEY A, BLACK, WITH CLIPSLOT, W/O CPA	33472-0730	A-BLK-CLIP	GC	PLR		M	R				4			SALEABLE			
KEY A, BLACK, WITH CLIPSLOT, W/O CPA	33472-0731	A-BLK-CLIP	GC	PLR		M	R				4		6	SALEABLE			
KEY B, LIGHT GRAY, WITH CLIPSLOT, W/O CPA	33472-0732	B-LG-CLIP	GC	PLR		M	R				4	5	6	SALEABLE			
KEY A, BLACK, W/CPA	33472-0733	A-BLK	GC	PLR	CPA	M	R		2			5		SALEABLE		34951-0610	34951-0620
KEY A, BLACK, WITH CLIPSLOT, W/O CPA	33472-0734	A-BLK-CLIP	GC	PLR		M	R					5		SALEABLE			
KEY A, BLACK, W/O CPA	33472-0735	A-BLK	GC	PLR		M	R					5		SALEABLE			
KEY B, LIGHT GRAY, W/O CPA	33472-0736	B-LG	GC	PLR		M	R				4	5	6	SALEABLE			
KEY A, BLACK, W/CPA	33472-0737	A-BLK	GC	PLR	CPA	M	R	1						SALEABLE			
KEY B, LIGHT GRAY, W/CPA	33472-0738	B-LG	GC	PLR	CPA	M	R	1						SALEABLE			
KEY A, BLACK, WITH CLIPSLOT, W/CPA	33472-0739	A-BLK-CLIP	GC	PLR	CPA	M	R	1	2			5	6	SALEABLE			
KEY A, BLACK, WITH CLIPSLOT, W/CPA	33472-0740	A-BLK-CLIP	GC	PLR	CPA	M	R		2	3	4	5		SALEABLE			

molex

MX150 RECEPTACLE 2X4 SEALED ASSEMBLY MAT SEAL
BOM AND PIN OUT SHEET

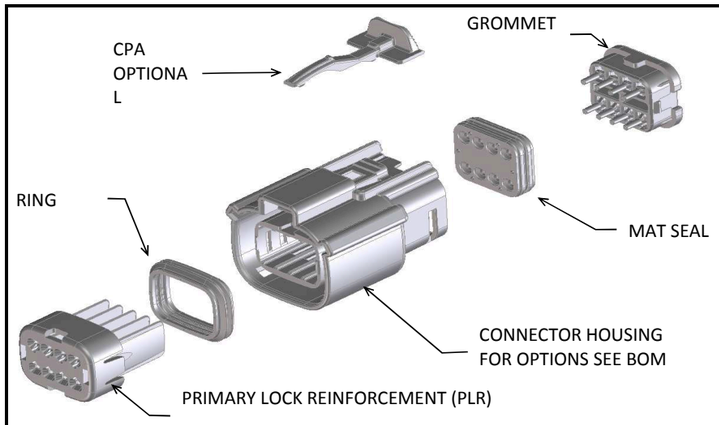

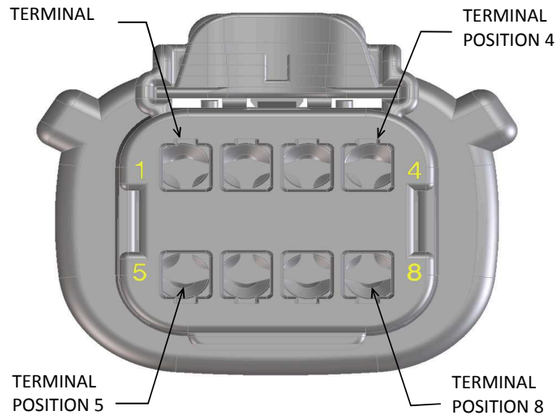

ABBREVIATION	DESCRIPTION	COLOR	MATERIAL
A-BLK	HOUSING, KEYING OPTION A	BLACK	SPS/NYLON GF20
B-LG	HOUSING, KEYING OPTION B	LIGHT GRAY	SPS/NYLON GF20
C-BR	HOUSING, KEYING OPTION C	BROWN	SPS/NYLON GF20
D-GR	HOUSING, KEYING OPTION D	GREEN	SPS/NYLON GF20
C-DG	HOUSING, KEYING OPTION C	DARK GRAY	SPS/NYLON GF20
D-SG	HOUSING, KEYING OPTION D	STONE GRAY	SPS/NYLON GF20
D-BLK	HOUSING, KEYING OPTION D	BLACK	SPS/NYLON GF20
A-YW	HOUSING, KEYING OPTION A	YELLOW	SPS/NYLON GF20
A-BLK-CLIP	HOUSING, KEYING OPTION A WITH CLIPSLOT	BLACK	SPS/NYLON GF20
B-LG-CLIP	HOUSING, KEYING OPTION B WITH CLIPSLOT	LIGHT GRAY	SPS/NYLON GF20
C-BR-CLIP	HOUSING, KEYING OPTION C WITH CLIPSLOT	BROWN	SPS/NYLON GF20
D-GR-CLIP	HOUSING, KEYING OPTION D WITH CLIPSLOT	GREEN	SPS/NYLON GF20
C-DG-CLIP	HOUSING, KEYING OPTION C WITH CLIPSLOT	DARK GRAY	SPS/NYLON GF20
D-SG-CLIP	HOUSING, KEYING OPTION D WITH CLIPSLOT	STONE GRAY	SPS/NYLON GF20
D-BLK-CLIP	HOUSING, KEYING OPTION D WITH CLIPSLOT	BLACK	SPS/NYLON GF20
GCO	GROMMET CAP (OPEN)	BLACK	SPS/NYLON GF20
GCP	GROMMET CAP (PLUGGED)	BLACK	SPS/NYLON GF20
PLR	PLR	NATURAL	SPS/NYLON GF20
CPA	CPA	RED	PBT GF30
M	MAT SEAL	LIGHT BLUE	INHERENTLY LUBRICATED SILICONE
RG	RING SEAL	GREEN	INHERENTLY LUBRICATED SILICONE
RR	RING SEAL	RUST RED	INHERENTLY LUBRICATED SILICONE

FOR ADDITIONAL INFORMATION SEE SD-33472-0001

ASSEMBLY DESCRIPTION	ASSEMBLY PART NUMBER	COMPONENT						BLOCKED TERMINALS								STATUS	COMMENTS	OPTIONAL ATTATCHMENTS SOLD SEPERATELY	
		THE PRESENCE OF AN ABBREVIATION INDICATES THE PRESENCE OF THAT COMPONENT.						CAVITY WITH A NUMBER INDICATES BLOCKED TERMINAL POSITION CAVITY WITHOUT A NUMBER INDICATES OPEN TERMINAL POSITION											
		HOUSING KEY/COLOR	GROMMET CAP	PLR	CPA	MAT SEAL	RING SEAL	1	2	3	4	5	6	7	8			BACKSHELL WITH RIBS	BACKSHELL WITHOUT RIBS
KEY A, BLACK, W/O CPA	33472-0801	A-BLK	GCO	PLR		M	RG									PLANNED OBSOLESCENCE		34951-0810	34951-0820
KEY B, LIGHT GRAY, W/O CPA	33472-0802	B-LG	GCO	PLR		M	RG									PLANNED OBSOLESCENCE		34951-0810	34951-0820
KEY C, BROWN, W/O CPA	33472-0803	C-BR	GCO	PLR		M	RG									PLANNED OBSOLESCENCE	SEE P/N 33472-0879	34951-0810	34951-0820
KEY D, GREEN, W/O CPA	33472-0804	D-GR	GCO	PLR		M	RG									PLANNED OBSOLESCENCE	SEE P/N 33472-0880	34951-0810	34951-0820
KEY D, BLACK, W/O CPA	33472-0805	D-BLK	GCO	PLR		M	RG									PLANNED OBSOLESCENCE		34951-0810	34951-0820
KEY A, BLACK, W/CPA	33472-0806	A-BLK	GCO	PLR	CPA	M	RG									PLANNED OBSOLESCENCE		34951-0810	34951-0820
KEY B, LIGHT GRAY, W/CPA	33472-0807	B-LG	GCO	PLR	CPA	M	RG									PLANNED OBSOLESCENCE		34951-0810	34951-0820
KEY C, BROWN, W/CPA	33472-0808	C-BR	GCO	PLR	CPA	M	RG									PLANNED OBSOLESCENCE	SEE P/N 33472-0881	34951-0810	34951-0820
KEY D, GREEN, W/CPA	33472-0809	D-GR	GCO	PLR	CPA	M	RG									PLANNED OBSOLESCENCE	SEE P/N 33472-0882	34951-0810	34951-0820
VOID KEY	33472-0810																		
KEY A, BLACK, W/O CPA	33472-0811	A-BLK	GCP	PLR		M	RG				4					PLANNED OBSOLESCENCE		34951-0810	34951-0820
KEY B, LIGHT GRAY, W/O CPA	33472-0812	B-LG	GCP	PLR		M	RG				4					PLANNED OBSOLESCENCE		34951-0810	34951-0820
KEY C, BROWN, W/O CPA	33472-0813	C-BR	GCP	PLR		M	RG				4					PLANNED OBSOLESCENCE		34951-0810	34951-0820
KEY D, GREEN, W/O CPA	33472-0814	D-GR	GCP	PLR		M	RG				4					PLANNED OBSOLESCENCE		34951-0810	34951-0820
VOID KEY	33472-0815																		
KEY A, BLACK, W/CPA	33472-0816	A-BLK	GCP	PLR	CPA	M	RG				4					PLANNED OBSOLESCENCE		34951-0810	34951-0820
KEY B, LIGHT GRAY, W/CPA	33472-0817	B-LG	GCP	PLR	CPA	M	RG				4					PLANNED OBSOLESCENCE		34951-0810	34951-0820
KEY C, BROWN, W/CPA	33472-0818	C-BR	GCP	PLR	CPA	M	RG				4					PLANNED OBSOLESCENCE		34951-0810	34951-0820
KEY D, GREEN, W/CPA	33472-0819	D-GR	GCP	PLR	CPA	M	RG				4					PLANNED OBSOLESCENCE	SEE P/N 33472-1009	34951-0810	34951-0820
VOID KEY	33472-0820																		
KEY A, BLACK, W/O CPA	33472-0821	A-BLK	GCP	PLR		M	RG				4	5				PLANNED OBSOLESCENCE		34951-0810	34951-0820
KEY B, LIGHT GRAY, W/O CPA	33472-0822	B-LG	GCP	PLR		M	RG				4	5				PLANNED OBSOLESCENCE		34951-0810	34951-0820
KEY C, BROWN, W/O CPA	33472-0823	C-BR	GCP	PLR		M	RG				4	5				PLANNED OBSOLESCENCE		34951-0810	34951-0820
KEY D, GREEN, W/O CPA	33472-0824	D-GR	GCP	PLR		M	RG				4	5				PLANNED OBSOLESCENCE		34951-0810	34951-0820
VOID KEY	33472-0825																		
KEY A, BLACK, W/CPA	33472-0826	A-BLK	GCP	PLR	CPA	M	RG				4	5				PLANNED OBSOLESCENCE		34951-0810	34951-0820
KEY B, LIGHT GRAY, W/CPA	33472-0827	B-LG	GCP	PLR	CPA	M	RG				4	5				PLANNED OBSOLESCENCE		34951-0810	34951-0820
KEY C, BROWN, W/CPA	33472-0828	C-BR	GCP	PLR	CPA	M	RG				4	5				PLANNED OBSOLESCENCE		34951-0810	34951-0820
KEY D, GREEN, W/CPA	33472-0829	D-GR	GCP	PLR	CPA	M	RG				4	5				PLANNED OBSOLESCENCE	SEE P/N 33472-1010	34951-0810	34951-0820
VOID KEY	33472-0830																		
KEY A, BLACK, W/O CPA	33472-0831	A-BLK	GCP	PLR		M	RG	1			4	5				PLANNED OBSOLESCENCE		34951-0810	34951-0820
KEY B, LIGHT GRAY, W/O CPA	33472-0832	B-LG	GCP	PLR		M	RG	1			4	5				PLANNED OBSOLESCENCE		34951-0810	34951-0820
KEY C, BROWN, W/O CPA	33472-0833	C-BR	GCP	PLR		M	RG	1			4	5				PLANNED OBSOLESCENCE		34951-0810	34951-0820
KEY D, GREEN, W/O CPA	33472-0834	D-GR	GCP	PLR		M	RG	1			4	5				PLANNED OBSOLESCENCE		34951-0810	34951-0820
VOID KEY	33472-0835																		
KEY A, BLACK, W/CPA	33472-0836	A-BLK	GCP	PLR	CPA	M	RG	1			4	5				PLANNED OBSOLESCENCE		34951-0810	34951-0820
KEY B, LIGHT GRAY, W/CPA	33472-0837	B-LG	GCP	PLR	CPA	M	RG	1			4	5				PLANNED OBSOLESCENCE		34951-0810	34951-0820
KEY C, BROWN, W/CPA	33472-0838	C-BR	GCP	PLR	CPA	M	RG	1			4	5				PLANNED OBSOLESCENCE		34951-0810	34951-0820
KEY D, GREEN, W/CPA	33472-0839	D-GR	GCP	PLR	CPA	M	RG	1			4	5				PLANNED OBSOLESCENCE		34951-0810	34951-0820
VOID KEY	33472-0840																		
KEY A, BLACK, W/O CPA	33472-0841	A-BLK	GCP	PLR		M	RG	1			4	5			8	PLANNED OBSOLESCENCE		34951-0810	34951-0820
KEY B, LIGHT GRAY, W/O CPA	33472-0842	B-LG	GCP	PLR		M	RG	1			4	5			8	PLANNED OBSOLESCENCE		34951-0810	34951-0820
KEY C, BROWN, W/O CPA	33472-0843	C-BR	GCP	PLR		M	RG	1			4	5			8	PLANNED OBSOLESCENCE		34951-0810	34951-0820
KEY D, GREEN, W/O CPA	33472-0844	D-GR	GCP	PLR		M	RG	1			4	5			8	PLANNED OBSOLESCENCE		34951-0810	34951-0820

molex

MX150 RECEPTACLE 2X4 SEALED ASSEMBLY MAT SEAL
BOM AND PIN OUT SHEET

ASSEMBLY DESCRIPTION	ASSEMBLY PART NUMBER	COMPONENT						BLOCKED TERMINALS								STATUS	COMMENTS	OPTIONAL ATTATCHMENTS SOLD SEPERATELY	
		THE PRESENCE OF AN ABBREVIATION INDICATES THE PRESENCE OF THAT COMPONENT.						CAVITY WITH A NUMBER INDICATES BLOCKED TERMINAL POSITION CAVITY WITHOUT A NUMBER INDICATES OPEN TERMINAL POSITION											
		HOUSING KEY/COLOR	GROMMET CAP	PLR	CPA	MAT SEAL	RING SEAL	1	2	3	4	5	6	7	8			BACKSHELL WITH RIBS	BACKSHELL WITHOUT RIBS
VOID KEY	33472-0845																		
KEY A, BLACK, W/CPA	33472-0846	A-BLK	GCP	PLR	CPA	M	RG	1			4	5			8	PLANNED OBSOLESCENCE		34951-0810	34951-0820
KEY B, LIGHT GRAY, W/CPA	33472-0847	B-LG	GCP	PLR	CPA	M	RG	1			4	5			8	PLANNED OBSOLESCENCE		34951-0810	34951-0820
KEY C, BROWN, W/CPA	33472-0848	C-BR	GCP	PLR	CPA	M	RG	1			4	5			8	PLANNED OBSOLESCENCE		34951-0810	34951-0820
KEY D, GREEN, W/CPA	33472-0849	D-GR	GCP	PLR	CPA	M	RG	1			4	5			8	PLANNED OBSOLESCENCE		34951-0810	34951-0820
VOID KEY	33472-0850																		
KEY A, BLACK, W/O CPA	33472-0851	A-BLK	GCP	PLR		M	RG	1	2	3	4	5	6	7	8	PLANNED OBSOLESCENCE		34951-0810	34951-0820
KEY B, LIGHT GRAY, W/O CPA	33472-0852	B-LG	GCP	PLR		M	RG	1	2	3	4	5	6	7	8	PLANNED OBSOLESCENCE		34951-0810	34951-0820
KEY C, BROWN, W/O CPA	33472-0853	C-BR	GCP	PLR		M	RG	1	2	3	4	5	6	7	8	PLANNED OBSOLESCENCE		34951-0810	34951-0820
KEY D, GREEN, W/O CPA	33472-0854	D-GR	GCP	PLR		M	RG	1	2	3	4	5	6	7	8	PLANNED OBSOLESCENCE		34951-0810	34951-0820
KEY D, BLACK, W/O CPA	33472-0855	D-BLK	GCP	PLR		M	RG	1	2	3	4	5	6	7	8	PLANNED OBSOLESCENCE		34951-0810	34951-0820
KEY A, BLACK, W/CPA	33472-0856	A-BLK	GCP	PLR	CPA	M	RG		2				6	7		PLANNED OBSOLESCENCE		34951-0810	34951-0820
KEY A, BLACK, W/CPA	33472-0857	A-BLK	GCP	PLR	CPA	M	RG	1	2			5	6	7		PLANNED OBSOLESCENCE		34951-0810	34951-0820
KEY A, BLACK, W/CPA	33472-0858	A-BLK	GCP	PLR	CPA	M	RG	1	2	3		5	6	7		PLANNED OBSOLESCENCE		34951-0810	34951-0820
KEY A, BLACK, W/O CPA	33472-0859	A-BLK	GCP	PLR		M	RG	1	2	3			6	7	8	PLANNED OBSOLESCENCE		34951-0810	34951-0820
KEY D, BLACK, W/O CPA	33472-0860	D-BLK	GCP	PLR		M	RG				4					PLANNED OBSOLESCENCE		34951-0810	34951-0820
KEY A, BLACK, W/O CPA	33472-0861	A-BLK	GCP	PLR		M	RG								8	PLANNED OBSOLESCENCE		34951-0810	34951-0820
KEY A, BLACK, W/O CPA	33472-0862	A-BLK	GCP	PLR		M	RG	1								PLANNED OBSOLESCENCE		34951-0810	34951-0820
KEY A, BLACK, W/O CPA	33472-0863	A-BLK	GCP	PLR		M	RG		2	3		5			8	PLANNED OBSOLESCENCE		34951-0810	34951-0820
KEY A, BLACK, W/O CPA	33472-0864	A-BLK	GCP	PLR		M	RG	1		3		5				PLANNED OBSOLESCENCE		34951-0810	34951-0820
KEY A, BLACK, W/O CPA	33472-0865	A-BLK	GCP	PLR		M	RG	1					6			PLANNED OBSOLESCENCE		34951-0810	34951-0820
KEY A, BLACK, W/O CPA	33472-0866	A-BLK	GCP	PLR		M	RG		2	3		5	6		8	PLANNED OBSOLESCENCE		34951-0810	34951-0820
KEY A, BLACK, W/O CPA	33472-0867	A-BLK	GCP	PLR		M	RG	1		3		5	6			PLANNED OBSOLESCENCE		34951-0810	34951-0820
KEY A, BLACK, W/O CPA	33472-0868	A-BLK	GCP	PLR		M	RG					5	6		8	PLANNED OBSOLESCENCE		34951-0810	34951-0820
KEY A, BLACK, W/O CPA	33472-0869	A-BLK	GCP	PLR		M	RG						6			PLANNED OBSOLESCENCE		34951-0810	34951-0820
KEY A, BLACK, W/O CPA	33472-0870	A-BLK	GCP	PLR		M	RG	1		3		5	6	7	8	PLANNED OBSOLESCENCE		34951-0810	34951-0820
KEY A, BLACK, W/O CPA	33472-0871	A-BLK	GCP	PLR		M	RG		2	3	4	5	6	7		PLANNED OBSOLESCENCE		34951-0810	34951-0820
KEY A, BLACK, W/O CPA	33472-0872	A-BLK	GCP	PLR		M	RG							7	8	PLANNED OBSOLESCENCE		34951-0810	34951-0820
KEY A, BLACK, W/O CPA	33472-0873	A-BLK	GCP	PLR		M	RG		2	3			6	7	8	PLANNED OBSOLESCENCE		34951-0810	34951-0820
KEY A, BLACK, W/O CPA	33472-0874	A-BLK	GCP	PLR		M	RG		2	3						PLANNED OBSOLESCENCE		34951-0810	34951-0820
KEY A, BLACK, W/O CPA	33472-0875	A-BLK	GCP	PLR		M	RG	1			4					PLANNED OBSOLESCENCE		34951-0810	34951-0820
KEY A, BLACK, W/O CPA	33472-0876	A-BLK	GCP	PLR		M	RG		2	3		5	6	7	8	PLANNED OBSOLESCENCE		34951-0810	34951-0820
KEY A, BLACK, W/CPA	33472-0877	A-BLK	GCP	PLR	CPA	M	RG								8	PLANNED OBSOLESCENCE		34951-0810	34951-0820
KEY A, BLACK, W/O CPA	33472-0878	A-BLK	GCP	PLR		M	RG			3		5	6			PLANNED OBSOLESCENCE		34951-0810	34951-0820
KEY C, DARK GRAY, W/O CPA	33472-0879	C-DG	GCO	PLR		M	RG									PLANNED OBSOLESCENCE		34951-0810	34951-0820
KEY D, STONE GRAY, W/O CPA	33472-0880	D-SG	GCO	PLR		M	RG									PLANNED OBSOLESCENCE		34951-0810	34951-0820
KEY C, DARK GRAY, W/CPA	33472-0881	C-DG	GCO	PLR	CPA	M	RG									PLANNED OBSOLESCENCE		34951-0810	34951-0820
KEY D, STONE GRAY, W/CPA	33472-0882	D-SG	GCO	PLR	CPA	M	RG									PLANNED OBSOLESCENCE		34951-0810	34951-0820
KEY A, BLACK, W/O CPA	33472-0883	A-BLK	GCP	PLR		M	RG		2	3	4	5		7	8	PLANNED OBSOLESCENCE		34951-0810	34951-0820
KEY A, BLACK, W/O CPA	33472-0884	A-BLK	GCP	PLR		M	RG			3			6	7		PLANNED OBSOLESCENCE		34951-0810	34951-0820
KEY A, BLACK, W/O CPA	33472-0885	A-BLK	GCP	PLR		M	RG		2	3	4	5	6		8	PLANNED OBSOLESCENCE		34951-0810	34951-0820
KEY A, BLACK, W/O CPA	33472-0886	A-BLK	GCP	PLR		M	RG			3			6		8	PLANNED OBSOLESCENCE		34951-0810	34951-0820
KEY B, LIGHT GRAY, W/CPA	33472-0887	B-LG	GCP	PLR	CPA	M	RG								8	PLANNED OBSOLESCENCE		34951-0810	34951-0820
KEY B, LIGHT GRAY, W/O CPA	33472-0888	B-LG	GCP	PLR		M	RG	1					6			PLANNED OBSOLESCENCE		34951-0810	34951-0820
KEY A, BLACK, W/O CPA	33472-0889	A-BLK	GCP	PLR		M	RG	1				5				PLANNED OBSOLESCENCE		34951-0810	34951-0820
KEY A, YELLOW, W/CPA	33472-0890	A-YW	GCP	PLR	CPA	M	RG		2	3						PLANNED OBSOLESCENCE		34951-0810	34951-0820
KEY A, YELLOW, W/CPA	33472-0891	A-YW	GCO	PLR	CPA	M	RG									PLANNED OBSOLESCENCE		34951-0810	34951-0820
KEY A, YELLOW, W/O CPA	33472-0892	A-YW	GCO	PLR		M	RG									PLANNED OBSOLESCENCE		34951-0810	34951-0820
KEY A, BLACK, W/CPA	33472-0893	A-BLK	GCP	PLR	CPA	M	RG						6			PLANNED OBSOLESCENCE		34951-0810	34951-0820
KEY A, BLACK, W/CPA	33472-0894	A-BLK	GCP	PLR	CPA	M	RG	1	2	3			6	7	8	PLANNED OBSOLESCENCE		34951-0810	34951-0820
KEY A, BLACK, W/O CPA	33472-0895	A-BLK	GCP	PLR		M	RG	1	2							PLANNED OBSOLESCENCE		34951-0810	34951-0820
KEY A, BLACK, W/O CPA	33472-1001	A-BLK	GCP	PLR		M	RG	1	2	3	4					PLANNED OBSOLESCENCE		34951-0810	34951-0820
KEY B, LIGHT GRAY, W/O CPA	33472-1002	B-LG	GCP	PLR		M	RG						6			PLANNED OBSOLESCENCE		34951-0810	34951-0820
KEY A, BLACK, W/O CPA	33472-1003	A-BLK	GCP	PLR		M	RG	1			4					PLANNED OBSOLESCENCE		34951-0810	34951-0820
KEY A, BLACK, W/O CPA	33472-1004	A-BLK	GCP	PLR		M	RG		2	3		5	6	7	8	PLANNED OBSOLESCENCE		34951-0810	34951-0820
KEY A, BLACK, W/CPA	33472-1005	A-BLK	GCP	PLR	CPA	M	RG								8	PLANNED OBSOLESCENCE		34951-0810	34951-0820
KEY A, BLACK, W/O CPA	33472-1006	A-BLK	GCP	PLR		M	RG	1	2	3	4	5	6			PLANNED OBSOLESCENCE		34951-0810	34951-0820
KEY A, BLACK, W/CPA	33472-1007	A-BLK	GCP	PLR	CPA	M	RG						6	7		PLANNED OBSOLESCENCE		34951-0810	34951-0820
KEY A, BLACK, W/CPA	33472-1008	A-BLK	GCP	PLR	CPA	M	RG							7		PLANNED OBSOLESCENCE		34951-0810	34951-0820
KEY D, STONE GRAY, W/CPA	33472-1009	D-SG	GCP	PLR	CPA	M	RG				4					PLANNED OBSOLESCENCE		34951-0810	34951-0820
KEY D, STONE GRAY, W/CPA	33472-1010	D-SG	GCP	PLR	CPA	M	RG				4	5				PLANNED OBSOLESCENCE		34951-0810	34951-0820
KEY D, STONE GRAY, W/CPA	33472-1011	D-SG	GCP	PLR	CPA	M	RG				4	5	6			PLANNED OBSOLESCENCE		34951-0810	34951-0820
KEY A, BLACK, W/O CPA	33472-1012	A-BLK	GCP	PLR		M	RG				4			7	8	PLANNED OBSOLESCENCE		34951-0810	34951-0820
KEY A, BLACK, W/CPA	33472-1013	A-BLK	GCP	PLR	CPA	M	RG			3	4	5	6	7	8	PLANNED OBSOLESCENCE		34951-0810	34951-0820
KEY A, BLACK, W/O CPA	33472-1014	A-BLK	GCP	PLR		M	RG			3	4	5	6	7	8	PLANNED OBSOLESCENCE		34951-0810	34951-0820
KEY A, BLACK, W/CPA	33472-1015	A-BLK	GCP	PLR	CPA	M	RG				4			7	8	PLANNED OBSOLESCENCE		34951-0810	34951-0820
KEY A, BLACK, W/O CPA	33472-1016	A-BLK	GCP	PLR		M	RG						6	7	8	PLANNED OBSOLESCENCE		34951-0810	34951-0820
KEY A, BLACK, W/O CPA	33472-1017	A-BLK	GCP	PLR		M	RG	1		3	4				8	PLANNED OBSOLESCENCE		34951-0810	34951-0820
KEY A, BLACK, W/CPA	33472-1018	A-BLK	GCP	PLR	CPA	M	RG					5	6	7	8	PLANNED OBSOLESCENCE		34951-0810	34951-0820
KEY A, BLACK, W/CPA	33472-1019	A-BLK	GCP	PLR	CPA	M	RG							7	8	PLANNED OBSOLESCENCE		34951-0810	34951-0820
KEY A, BLACK, W/CPA	33472-1020	A-BLK	GCP	PLR	CPA	M	RG		2	3	4		6	7	8	PLANNED OBSOLESCENCE		34951-0810	34951-0820
KEY A, BLACK, W/CPA	33472-1021	A-BLK	GCP	PLR	CPA	M	RG	1	2	3	4	5	6	7	8	PLANNED OBSOLESCENCE		34951-0810	34951-0820
KEY A, BLACK, W/CPA	33472-1022	A-BLK	GCP	PLR	CPA	M	RG	1				5				PLANNED OBSOLESCENCE		34951-0810	34951-0820
KEY A, BLACK, W/O CPA	33472-1023	A-BLK	GCP	PLR		M	RG					5	6	7	8	PLANNED OBSOLESCENCE		34951-0810	34951-0820
KEY A, BLACK, W/O CPA	33472-1024	A-BLK	GCP	PLR		M	RG			3	4					PLANNED OBSOLESCENCE		34951-0810	34951-0820

molex

MX150 RECEPTACLE 2X4 SEALED ASSEMBLY MAT SEAL
BOM AND PIN OUT SHEET

ASSEMBLY DESCRIPTION	ASSEMBLY PART NUMBER	COMPONENT						BLOCKED TERMINALS								STATUS	COMMENTS	OPTIONAL ATTATCHMENTS SOLD SEPERATELY	
		THE PRESENCE OF AN ABBREVIATION INDICATES THE PRESENCE OF THAT COMPONENT.						CAVITY WITH A NUMBER INDICATES BLOCKED TERMINAL POSITION CAVITY WITHOUT A NUMBER INDICATES OPEN TERMINAL POSITION											
		HOUSING KEY/COLOR	GROMMET CAP	PLR	CPA	MAT SEAL	RING SEAL	1	2	3	4	5	6	7	8			BACKSHELL WITH RIBS	BACKSHELL WITHOUT RIBS
KEY D, STONE GRAY, W/O CPA	33472-1025	D-SG	GCP	PLR		M	RG				4	5	6			PLANNED OBSOLESCENCE		34951-0810	34951-0820
KEY D, STONE GRAY, W/O CPA	33472-1026	D-SG	GCP	PLR		M	RG				4					PLANNED OBSOLESCENCE		34951-0810	34951-0820
KEY B, LIGHT GRAY, W/O CPA	33472-1027	B-LG	GCP	PLR		M	RG							7	8	PLANNED OBSOLESCENCE		34951-0810	34951-0820
KEY A, BLACK, W/O CPA	33472-1028	A-BLK	GCP	PLR		M	RG	1	2	3	4			7	8	PLANNED OBSOLESCENCE		34951-0810	34951-0820
KEY A, BLACK, W/O CPA	33472-1029	A-BLK	GCP	PLR		M	RG			3	4				8	PLANNED OBSOLESCENCE		34951-0810	34951-0820
KEY A, BLACK, W/O CPA	33472-1030	A-BLK	GCP	PLR		M	RG	1	2	3	4	5		7		PLANNED OBSOLESCENCE		34951-0810	34951-0820
KEY A, BLACK, W/O CPA	33472-1031	A-BLK	GCP	PLR		M	RG					5				PLANNED OBSOLESCENCE		34951-0810	34951-0820
KEY A, BLACK, W/O CPA	33472-1032	A-BLK	GCP	PLR		M	RG		2			5				PLANNED OBSOLESCENCE		34951-0810	34951-0820
KEY B, LIGHT GRAY, W/O CPA	33472-1033	B-LG	GCP	PLR		M	RG	1		3					8	PLANNED OBSOLESCENCE		34951-0810	34951-0820
KEY B, LIGHT GRAY, W/O CPA	33472-1034	B-LG	GCP	PLR		M	RG			3					8	PLANNED OBSOLESCENCE		34951-0810	34951-0820
KEY B, LIGHT GRAY, W/O CPA	33472-1035	B-LG	GCP	PLR		M	RG	1								PLANNED OBSOLESCENCE		34951-0810	34951-0820
KEY A, BLACK, W/O CPA	33472-1036	A-BLK	GCP	PLR		M	RG	1							8	PLANNED OBSOLESCENCE		34951-0810	34951-0820
KEY A, BLACK, W/O CPA	33472-1037	A-BLK	GCP	PLR		M	RG						6		8	PLANNED OBSOLESCENCE		34951-0810	34951-0820
KEY A, BLACK, W/O CPA	33472-1038	A-BLK	GCP	PLR		M	RG	1			4	5	6	7	8	PLANNED OBSOLESCENCE		34951-0810	34951-0820
KEY A, BLACK, W/O CPA	33472-1039	A-BLK	GCP	PLR		M	RG		2					7		PLANNED OBSOLESCENCE		34951-0810	34951-0820
KEY B, LIGHT GRAY, W/O CPA	33472-1040	B-LG	GCP	PLR		M	RG					5		7		PLANNED OBSOLESCENCE		34951-0810	34951-0820
KEY A, BLACK, W/O CPA	33472-1041	A-BLK	GCP	PLR		M	RG				4	5	6	7	8	PLANNED OBSOLESCENCE		34951-0810	34951-0820
KEY A, BLACK, W/O CPA	33472-1042	A-BLK	GCP	PLR		M	RG					5			8	PLANNED OBSOLESCENCE		34951-0810	34951-0820
KEY A, BLACK, W/O CPA	33472-1043	A-BLK	GCP	PLR		M	RG		2		4	5	6			PLANNED OBSOLESCENCE		34951-0810	34951-0820
KEY A, BLACK, W/O CPA	33472-1044	A-BLK	GCP	PLR		M	RG	1	2	3	4		6	7		PLANNED OBSOLESCENCE		34951-0810	34951-0820
KEY A, BLACK, W/O CPA	33472-1045	A-BLK	GCP	PLR		M	RG				4		6			PLANNED OBSOLESCENCE		34951-0810	34951-0820
KEY A, BLACK, W/CPA	33472-1046	A-BLK	GCP	PLR	CPA	M	RG	1						7		PLANNED OBSOLESCENCE		34951-0810	34951-0820
KEY B, LIGHT GRAY, W/O CPA	33472-1047	B-LG	GCP	PLR		M	RG					5				PLANNED OBSOLESCENCE		34951-0810	34951-0820
KEY A, BLACK, W/O CPA	33472-1048	A-BLK	GCP	PLR		M	RG	1	2			5	6		8	PLANNED OBSOLESCENCE		34951-0810	34951-0820
KEY A, BLACK, W/O CPA	33472-1049	A-BLK	GCP	PLR		M	RG	1	2						8	PLANNED OBSOLESCENCE		34951-0810	34951-0820
KEY A, BLACK, W/O CPA	33472-1050	A-BLK	GCP	PLR		M	RG				4	5	6			PLANNED OBSOLESCENCE		34951-0810	34951-0820
KEY A, BLACK, WITH CLIPSLOT, W/O CPA	33472-0901	A-BLK-CLIP	GCO	PLR		M	RG									PLANNED OBSOLESCENCE			
KEY B, LIGHT GRAY, WITH CLIPSLOT, W/O CPA	33472-0902	B-LG-CLIP	GCO	PLR		M	RG									PLANNED OBSOLESCENCE			
KEY C, BROWN, WITH CLIPSLOT, W/O CPA	33472-0903	C-BR-CLIP	GCO	PLR		M	RG									PLANNED OBSOLESCENCE	SEE P/N 33472-0922		
KEY D, GREEN, WITH CLIPSLOT, W/O CPA	33472-0904	D-GR-CLIP	GCO	PLR		M	RG									PLANNED OBSOLESCENCE	SEE P/N 33472-0923		
KEY D, BLACK, WITH CLIPSLOT, W/O CPA	33472-0905	D-BLK-CLIP	GCO	PLR		M	RG									PLANNED OBSOLESCENCE			
KEY A, BLACK, WITH CLIPSLOT, W/CPA	33472-0906	A-BLK-CLIP	GCO	PLR	CPA	M	RG									PLANNED OBSOLESCENCE			
KEY B, LIGHT GRAY, WITH CLIPSLOT, W/CPA	33472-0907	B-LG-CLIP	GCO	PLR	CPA	M	RG									PLANNED OBSOLESCENCE			
KEY C, BROWN, WITH CLIPSLOT, W/CPA	33472-0908	C-BR-CLIP	GCO	PLR	CPA	M	RG									PLANNED OBSOLESCENCE	SEE P/N 33472-0924		
KEY D, GREEN, WITH CLIPSLOT, W/CPA	33472-0909	D-GR-CLIP	GCO	PLR	CPA	M	RG									PLANNED OBSOLESCENCE	SEE P/N 33472-0925		
KEY A, BLACK, WITH CLIPSLOT, W/O CPA	33472-0910	A-BLK-CLIP	GCP	PLR		M	RG				4					PLANNED OBSOLESCENCE			
KEY A, BLACK, WITH CLIPSLOT, W/O CPA	33472-0920	A-BLK-CLIP	GCP	PLR		M	RG				4				8	PLANNED OBSOLESCENCE			
KEY A, BLACK, WITH CLIPSLOT, W/O CPA	33472-0921	A-BLK-CLIP	GCP	PLR		M	RG								8	PLANNED OBSOLESCENCE			
KEY C, DARK GRAY, WITH CLIPSLOT, W/O CPA	33472-0922	C-DG-CLIP	GCO	PLR		M	RG									PLANNED OBSOLESCENCE			
KEY D, STONE GRAY, WITH CLIPSLOT, W/O CPA	33472-0923	D-SG-CLIP	GCO	PLR		M	RG									PLANNED OBSOLESCENCE			
KEY C, DARK GRAY, WITH CLIPSLOT, W/CPA	33472-0924	C-DG-CLIP	GCO	PLR	CPA	M	RG									PLANNED OBSOLESCENCE			
KEY D, STONE GRAY, WITH CLIPSLOT, W/CPA	33472-0925	D-SG-CLIP	GCO	PLR	CPA	M	RG									PLANNED OBSOLESCENCE			
KEY B, LIGHT GRAY, WITH CLIPSLOT, W/O CPA	33472-0926	B-LG-CLIP	GCP	PLR		M	RG				4				8	PLANNED OBSOLESCENCE			
KEY A, BLACK, WITH CLIPSLOT, W/CPA	33472-0927	A-BLK-CLIP	GCP	PLR	CPA	M	RG				4				8	PLANNED OBSOLESCENCE			
KEY B, LIGHT GRAY, WITH CLIPSLOT, W/CPA	33472-0928	B-LG-CLIP	GCP	PLR	CPA	M	RG				4				8	PLANNED OBSOLESCENCE			
KEY A, BLACK, WITH CLIPSLOT, W/O CPA	33472-0929	A-BLK-CLIP	GCP	PLR		M	RG				4	5		7	8	PLANNED OBSOLESCENCE			
KEY A, BLACK, WITH CLIPSLOT, W/O CPA	33472-0930	A-BLK-CLIP	GCP	PLR		M	RG		2	3	4	5		7	8	PLANNED OBSOLESCENCE			
KEY A, BLACK, WITH CLIPSLOT, W/O CPA	33472-0931	A-BLK-CLIP	GCP	PLR		M	RG	1	2	3			6			PLANNED OBSOLESCENCE			
KEY A, BLACK, WITH CLIPSLOT, W/O CPA	33472-0932	A-BLK-CLIP	GCP	PLR		M	RG	1					6			PLANNED OBSOLESCENCE			
KEY A, BLACK, WITH CLIPSLOT, W/CPA	33472-0933	A-BLK-CLIP	GCP	PLR	CPA	M	RG								8	PLANNED OBSOLESCENCE			
KEY B, LIGHT GRAY, WITH CLIPSLOT, W/CPA	33472-0934	B-LG-CLIP	GCP	PLR	CPA	M	RG								8	PLANNED OBSOLESCENCE			
KEY A, BLACK, WITH CLIPSLOT, W/CPA	33472-0935	A-BLK-CLIP	GCP	PLR	CPA	M	RG		2	3	4		6	7	8	PLANNED OBSOLESCENCE			
KEY A, BLACK, WITH CLIPSLOT, W/O CPA	33472-0936	A-BLK-CLIP	GCP	PLR		M	RG						6	7	8	PLANNED OBSOLESCENCE			
KEY A, BLACK, WITH CLIPSLOT, W/O CPA	33472-0937	A-BLK-CLIP	GCP	PLR		M	RG					5			8	PLANNED OBSOLESCENCE			
KEY A, BLACK, WITH CLIPSLOT, W/O CPA	33472-0938	A-BLK-CLIP	GCP	PLR		M	RG					5				PLANNED OBSOLESCENCE			
KEY A, BLACK, WITH CLIPSLOT, W/O CPA	33472-0939	A-BLK-CLIP	GCP	PLR		M	RG				4	5	6	7	8	PLANNED OBSOLESCENCE			
KEY A, BLACK, W/O CPA	33472-4801	A-BLK	GCO	PLR		M	RR									SALEABLE		34951-0810	34951-0820
KEY B, LIGHT GRAY, W/O CPA	33472-4802	B-LG	GCO	PLR		M	RR									SALEABLE		34951-0810	34951-0820
KEY C, BROWN, W/O CPA	33472-4803	C-BR	GCO	PLR		M	RR									NOT RECOMMENDED	SEE P/N 33472-4879	34951-0810	34951-0820
KEY D, GREEN, W/O CPA	33472-4804	D-GR	GCO	PLR		M	RR									NOT RECOMMENDED	SEE P/N 33472-4880	34951-0810	34951-0820
KEY D, BLACK, W/O CPA	33472-4805	D-BLK	GCO	PLR		M	RR									SALEABLE		34951-0810	34951-0820
KEY A, BLACK, W/CPA	33472-4806	A-BLK	GCO	PLR	CPA	M	RR									SALEABLE		34951-0810	34951-0820
KEY B, LIGHT GRAY, W/CPA	33472-4807	B-LG	GCO	PLR	CPA	M	RR									SALEABLE		34951-0810	34951-0820
KEY C, BROWN, W/CPA	33472-4808	C-BR	GCO	PLR	CPA	M	RR									NOT RECOMMENDED	SEE P/N 33472-4881	34951-0810	34951-0820
KEY D, GREEN, W/CPA	33472-4809	D-GR	GCO	PLR	CPA	M	RR									NOT RECOMMENDED	SEE P/N 33472-4882	34951-0810	34951-0820
VOID KEY	33472-4810																		
KEY A, BLACK, W/O CPA	33472-4811	A-BLK	GCP	PLR		M	RR				4					SALEABLE		34951-0810	34951-0820
KEY B, LIGHT GRAY, W/O CPA	33472-4812	B-LG	GCP	PLR		M	RR				4					SALEABLE		34951-0810	34951-0820
KEY C, BROWN, W/O CPA	33472-4813	C-BR	GCP	PLR		M	RR				4					NOT RECOMMENDED		34951-0810	34951-0820
KEY D, GREEN, W/O CPA	33472-4814	D-GR	GCP	PLR		M	RR				4					NOT RECOMMENDED		34951-0810	34951-0820
VOID KEY	33472-4815																		
KEY A, BLACK, W/CPA	33472-4816	A-BLK	GCP	PLR	CPA	M	RR				4					SALEABLE		34951-0810	34951-0820
KEY B, LIGHT GRAY, W/CPA	33472-4817	B-LG	GCP	PLR	CPA	M	RR				4					SALEABLE		34951-0810	34951-0820
KEY C, BROWN, W/CPA	33472-4818	C-BR	GCP	PLR	CPA	M	RR				4					NOT RECOMMENDED		34951-0810	34951-0820
KEY D, GREEN, W/CPA	33472-4819	D-GR	GCP	PLR	CPA	M	RR				4					NOT RECOMMENDED	SEE P/N 33472-5009	34951-0810	34951-0820

molex

MX150 RECEPTACLE 2X4 SEALED ASSEMBLY MAT SEAL
BOM AND PIN OUT SHEET

ASSEMBLY DESCRIPTION	ASSEMBLY PART NUMBER	COMPONENT						BLOCKED TERMINALS								STATUS	COMMENTS	OPTIONAL ATTATCHMENTS SOLD SEPERATELY	
		THE PRESENCE OF AN ABBREVIATION INDICATES THE PRESENCE OF THAT COMPONENT.						CAVITY WITH A NUMBER INDICATES BLOCKED TERMINAL POSITION CAVITY WITHOUT A NUMBER INDICATES OPEN TERMINAL POSITION											
		HOUSING KEY/COLOR	GROMMET CAP	PLR	CPA	MAT SEAL	RING SEAL	1	2	3	4	5	6	7	8			BACKSHELL WITH RIBS	BACKSHELL WITHOUT RIBS
VOID KEY	33472-4820																		
KEY A, BLACK, W/O CPA	33472-4821	A-BLK	GCP	PLR		M	RR				4	5				SALEABLE		34951-0810	34951-0820
KEY B, LIGHT GRAY, W/O CPA	33472-4822	B-LG	GCP	PLR		M	RR				4	5				SALEABLE		34951-0810	34951-0820
KEY C, BROWN, W/O CPA	33472-4823	C-BR	GCP	PLR		M	RR				4	5				NOT RECOMMENDED		34951-0810	34951-0820
KEY D, GREEN, W/O CPA	33472-4824	D-GR	GCP	PLR		M	RR				4	5				NOT RECOMMENDED		34951-0810	34951-0820
VOID KEY	33472-4825																		
KEY A, BLACK, W/CPA	33472-4826	A-BLK	GCP	PLR	CPA	M	RR				4	5				SALEABLE		34951-0810	34951-0820
KEY B, LIGHT GRAY, W/CPA	33472-4827	B-LG	GCP	PLR	CPA	M	RR				4	5				SALEABLE		34951-0810	34951-0820
KEY C, BROWN, W/CPA	33472-4828	C-BR	GCP	PLR	CPA	M	RR				4	5				NOT RECOMMENDED		34951-0810	34951-0820
KEY D, GREEN, W/CPA	33472-4829	D-GR	GCP	PLR	CPA	M	RR				4	5				NOT RECOMMENDED	SEE P/N 33472-5010	34951-0810	34951-0820
VOID KEY	33472-4830																		
KEY A, BLACK, W/O CPA	33472-4831	A-BLK	GCP	PLR		M	RR	1			4	5				SALEABLE		34951-0810	34951-0820
KEY B, LIGHT GRAY, W/O CPA	33472-4832	B-LG	GCP	PLR		M	RR	1			4	5				SALEABLE		34951-0810	34951-0820
KEY C, BROWN, W/O CPA	33472-4833	C-BR	GCP	PLR		M	RR	1			4	5				NOT RECOMMENDED		34951-0810	34951-0820
KEY D, GREEN, W/O CPA	33472-4834	D-GR	GCP	PLR		M	RR	1			4	5				NOT RECOMMENDED		34951-0810	34951-0820
VOID KEY	33472-4835																		
KEY A, BLACK, W/CPA	33472-4836	A-BLK	GCP	PLR	CPA	M	RR	1			4	5				SALEABLE		34951-0810	34951-0820
KEY B, LIGHT GRAY, W/CPA	33472-4837	B-LG	GCP	PLR	CPA	M	RR	1			4	5				SALEABLE		34951-0810	34951-0820
KEY C, BROWN, W/CPA	33472-4838	C-BR	GCP	PLR	CPA	M	RR	1			4	5				NOT RECOMMENDED		34951-0810	34951-0820
KEY D, GREEN, W/CPA	33472-4839	D-GR	GCP	PLR	CPA	M	RR	1			4	5				NOT RECOMMENDED		34951-0810	34951-0820
VOID KEY	33472-4840																		
KEY A, BLACK, W/O CPA	33472-4841	A-BLK	GCP	PLR		M	RR	1			4	5			8	SALEABLE		34951-0810	34951-0820
KEY B, LIGHT GRAY, W/O CPA	33472-4842	B-LG	GCP	PLR		M	RR	1			4	5			8	SALEABLE		34951-0810	34951-0820
KEY C, BROWN, W/O CPA	33472-4843	C-BR	GCP	PLR		M	RR	1			4	5			8	NOT RECOMMENDED		34951-0810	34951-0820
KEY D, GREEN, W/O CPA	33472-4844	D-GR	GCP	PLR		M	RR	1			4	5			8	NOT RECOMMENDED		34951-0810	34951-0820
VOID KEY	33472-4845																		
KEY A, BLACK, W/CPA	33472-4846	A-BLK	GCP	PLR	CPA	M	RR	1			4	5			8	SALEABLE		34951-0810	34951-0820
KEY B, LIGHT GRAY, W/CPA	33472-4847	B-LG	GCP	PLR	CPA	M	RR	1			4	5			8	SALEABLE		34951-0810	34951-0820
KEY C, BROWN, W/CPA	33472-4848	C-BR	GCP	PLR	CPA	M	RR	1			4	5			8	NOT RECOMMENDED		34951-0810	34951-0820
KEY D, GREEN, W/CPA	33472-4849	D-GR	GCP	PLR	CPA	M	RR	1			4	5			8	NOT RECOMMENDED		34951-0810	34951-0820
VOID KEY	33472-4850																		
KEY A, BLACK, W/O CPA	33472-4851	A-BLK	GCP	PLR		M	RR	1	2	3	4	5	6	7	8	SALEABLE		34951-0810	34951-0820
KEY B, LIGHT GRAY, W/O CPA	33472-4852	B-LG	GCP	PLR		M	RR	1	2	3	4	5	6	7	8	SALEABLE		34951-0810	34951-0820
KEY C, BROWN, W/O CPA	33472-4853	C-BR	GCP	PLR		M	RR	1	2	3	4	5	6	7	8	NOT RECOMMENDED		34951-0810	34951-0820
KEY D, GREEN, W/O CPA	33472-4854	D-GR	GCP	PLR		M	RR	1	2	3	4	5	6	7	8	NOT RECOMMENDED		34951-0810	34951-0820
KEY D, BLACK, W/O CPA	33472-4855	D-BLK	GCP	PLR		M	RR	1	2	3	4	5	6	7	8	SALEABLE		34951-0810	34951-0820
KEY A, BLACK, W/CPA	33472-4856	A-BLK	GCP	PLR	CPA	M	RR		2				6	7		SALEABLE		34951-0810	34951-0820
KEY A, BLACK, W/CPA	33472-4857	A-BLK	GCP	PLR	CPA	M	RR	1	2			5	6	7		SALEABLE		34951-0810	34951-0820
KEY A, BLACK, W/CPA	33472-4858	A-BLK	GCP	PLR	CPA	M	RR	1	2	3		5	6	7		SALEABLE		34951-0810	34951-0820
KEY A, BLACK, W/O CPA	33472-4859	A-BLK	GCP	PLR		M	RR	1	2	3			6	7	8	SALEABLE		34951-0810	34951-0820
KEY D, BLACK, W/O CPA	33472-4860	D-BLK	GCP	PLR		M	RR				4					SALEABLE		34951-0810	34951-0820
KEY A, BLACK, W/O CPA	33472-4861	A-BLK	GCP	PLR		M	RR								8	SALEABLE		34951-0810	34951-0820
KEY A, BLACK, W/O CPA	33472-4862	A-BLK	GCP	PLR		M	RR	1								SALEABLE		34951-0810	34951-0820
KEY A, BLACK, W/O CPA	33472-4863	A-BLK	GCP	PLR		M	RR		2	3		5			8	SALEABLE		34951-0810	34951-0820
KEY A, BLACK, W/O CPA	33472-4864	A-BLK	GCP	PLR		M	RR	1		3		5				SALEABLE		34951-0810	34951-0820
KEY A, BLACK, W/O CPA	33472-4865	A-BLK	GCP	PLR		M	RR	1					6			SALEABLE		34951-0810	34951-0820
KEY A, BLACK, W/O CPA	33472-4866	A-BLK	GCP	PLR		M	RR		2	3		5	6		8	SALEABLE		34951-0810	34951-0820
KEY A, BLACK, W/O CPA	33472-4867	A-BLK	GCP	PLR		M	RR	1		3		5	6			SALEABLE		34951-0810	34951-0820
KEY A, BLACK, W/O CPA	33472-4868	A-BLK	GCP	PLR		M	RR					5	6		8	SALEABLE		34951-0810	34951-0820
KEY A, BLACK, W/O CPA	33472-4869	A-BLK	GCP	PLR		M	RR						6			SALEABLE		34951-0810	34951-0820
KEY A, BLACK, W/O CPA	33472-4870	A-BLK	GCP	PLR		M	RR	1		3		5	6	7	8	SALEABLE		34951-0810	34951-0820
KEY A, BLACK, W/O CPA	33472-4871	A-BLK	GCP	PLR		M	RR		2	3	4	5	6	7		SALEABLE		34951-0810	34951-0820
KEY A, BLACK, W/O CPA	33472-4872	A-BLK	GCP	PLR		M	RR							7	8	SALEABLE		34951-0810	34951-0820
KEY A, BLACK, W/O CPA	33472-4873	A-BLK	GCP	PLR		M	RR		2	3			6	7	8	SALEABLE		34951-0810	34951-0820
KEY A, BLACK, W/O CPA	33472-4874	A-BLK	GCP	PLR		M	RR		2	3						SALEABLE		34951-0810	34951-0820
KEY A, BLACK, W/O CPA	33472-4875	A-BLK	GCP	PLR		M	RR	1			4					SALEABLE		34951-0810	34951-0820
KEY A, BLACK, W/O CPA	33472-4876	A-BLK	GCP	PLR		M	RR		2	3		5	6	7	8	SALEABLE		34951-0810	34951-0820
KEY A, BLACK, W/CPA	33472-4877	A-BLK	GCP	PLR	CPA	M	RR								8	SALEABLE		34951-0810	34951-0820
KEY A, BLACK, W/O CPA	33472-4878	A-BLK	GCP	PLR		M	RR			3		5	6			SALEABLE		34951-0810	34951-0820
KEY C, DARK GRAY, W/O CPA	33472-4879	C-DG	GCO	PLR		M	RR									SALEABLE		34951-0810	34951-0820
KEY D, STONE GRAY, W/O CPA	33472-4880	D-SG	GCO	PLR		M	RR									SALEABLE		34951-0810	34951-0820
KEY C, DARK GRAY, W/CPA	33472-4881	C-DG	GCO	PLR	CPA	M	RR									SALEABLE		34951-0810	34951-0820
KEY D, STONE GRAY, W/CPA	33472-4882	D-SG	GCO	PLR	CPA	M	RR									SALEABLE		34951-0810	34951-0820
KEY A, BLACK, W/O CPA	33472-4883	A-BLK	GCP	PLR		M	RR		2	3	4	5		7	8	SALEABLE		34951-0810	34951-0820
KEY A, BLACK, W/O CPA	33472-4884	A-BLK	GCP	PLR		M	RR			3			6	7		SALEABLE		34951-0810	34951-0820
KEY A, BLACK, W/O CPA	33472-4885	A-BLK	GCP	PLR		M	RR		2	3	4	5	6		8	SALEABLE		34951-0810	34951-0820
KEY A, BLACK, W/O CPA	33472-4886	A-BLK	GCP	PLR		M	RR			3			6		8	SALEABLE		34951-0810	34951-0820
KEY B, LIGHT GRAY, W/CPA	33472-4887	B-LG	GCP	PLR	CPA	M	RR								8	SALEABLE		34951-0810	34951-0820
KEY B, LIGHT GRAY, W/O CPA	33472-4888	B-LG	GCP	PLR		M	RR	1					6			SALEABLE		34951-0810	34951-0820
KEY A, BLACK, W/O CPA	33472-4889	A-BLK	GCP	PLR		M	RR	1				5				SALEABLE		34951-0810	34951-0820
KEY A, YELLOW, W/CPA	33472-4890	A-YW	GCP	PLR	CPA	M	RR		2	3						SALEABLE		34951-0810	34951-0820
KEY A, YELLOW, W/CPA	33472-4891	A-YW	GCO	PLR	CPA	M	RR									SALEABLE		34951-0810	34951-0820
KEY A, YELLOW, W/O CPA	33472-4892	A-YW	GCO	PLR		M	RR									SALEABLE		34951-0810	34951-0820
KEY A, BLACK, W/CPA	33472-4893	A-BLK	GCP	PLR	CPA	M	RR						6			SALEABLE		34951-0810	34951-0820
KEY A, BLACK, W/CPA	33472-4894	A-BLK	GCP	PLR	CPA	M	RR	1	2	3			6	7	8	SALEABLE		34951-0810	34951-0820

MX150 RECEPTACLE 2X4 SEALED ASSEMBLY MAT SEAL
BOM AND PIN OUT SHEET

ASSEMBLY DESCRIPTION	ASSEMBLY PART NUMBER	COMPONENT						BLOCKED TERMINALS								STATUS	COMMENTS	OPTIONAL ATTATCHMENTS SOLD SEPERATELY	
		THE PRESENCE OF AN ABBREVIATION INDICATES THE PRESENCE OF THAT COMPONENT.						CAVITY WITH A NUMBER INDICATES BLOCKED TERMINAL POSITION CAVITY WITHOUT A NUMBER INDICATES OPEN TERMINAL POSITION											
		HOUSING KEY/COLOR	GROMMET CAP	PLR	CPA	MAT SEAL	RING SEAL	1	2	3	4	5	6	7	8			BACKSHELL WITH RIBS	BACKSHELL WITHOUT RIBS
KEY A, BLACK, W/O CPA	33472-4895	A-BLK	GCP	PLR		M	RR	1	2							SALEABLE		34951-0810	34951-0820
KEY A, BLACK, W/O CPA	33472-5001	A-BLK	GCP	PLR		M	RR	1	2	3	4					SALEABLE		34951-0810	34951-0820
KEY B, LIGHT GRAY, W/O CPA	33472-5002	B-LG	GCP	PLR		M	RR						6			SALEABLE		34951-0810	34951-0820
KEY A, BLACK, W/O CPA	33472-5003	A-BLK	GCP	PLR		M	RR	1			4					SALEABLE		34951-0810	34951-0820
KEY A, BLACK, W/O CPA	33472-5004	A-BLK	GCP	PLR		M	RR		2	3		5	6	7	8	SALEABLE		34951-0810	34951-0820
KEY A, BLACK, W/CPA	33472-5005	A-BLK	GCP	PLR	CPA	M	RR								8	SALEABLE		34951-0810	34951-0820
KEY A, BLACK, W/O CPA	33472-5006	A-BLK	GCP	PLR		M	RR	1	2	3	4	5	6			SALEABLE		34951-0810	34951-0820
KEY A, BLACK, W/CPA	33472-5007	A-BLK	GCP	PLR	CPA	M	RR						6	7		SALEABLE		34951-0810	34951-0820
KEY A, BLACK, W/CPA	33472-5008	A-BLK	GCP	PLR	CPA	M	RR							7		SALEABLE		34951-0810	34951-0820
KEY D, STONE GRAY, W/CPA	33472-5009	D-SG	GCP	PLR	CPA	M	RR				4					SALEABLE		34951-0810	34951-0820
KEY D, STONE GRAY, W/CPA	33472-5010	D-SG	GCP	PLR	CPA	M	RR				4	5				SALEABLE		34951-0810	34951-0820
KEY D, STONE GRAY, W/CPA	33472-5011	D-SG	GCP	PLR	CPA	M	RR				4	5	6			SALEABLE		34951-0810	34951-0820
KEY A, BLACK, W/O CPA	33472-5012	A-BLK	GCP	PLR		M	RR				4			7	8	SALEABLE		34951-0810	34951-0820
KEY A, BLACK, W/CPA	33472-5013	A-BLK	GCP	PLR	CPA	M	RR			3	4	5	6	7	8	SALEABLE		34951-0810	34951-0820
KEY A, BLACK, W/O CPA	33472-5014	A-BLK	GCP	PLR		M	RR			3	4	5	6	7	8	SALEABLE		34951-0810	34951-0820
KEY A, BLACK, W/CPA	33472-5015	A-BLK	GCP	PLR	CPA	M	RR				4			7	8	SALEABLE		34951-0810	34951-0820
KEY A, BLACK, W/O CPA	33472-5016	A-BLK	GCP	PLR		M	RR						6	7	8	SALEABLE		34951-0810	34951-0820
KEY A, BLACK, W/O CPA	33472-5017	A-BLK	GCP	PLR		M	RR	1		3	4				8	SALEABLE		34951-0810	34951-0820
KEY A, BLACK, W/CPA	33472-5018	A-BLK	GCP	PLR	CPA	M	RR					5	6	7	8	SALEABLE		34951-0810	34951-0820
KEY A, BLACK, W/CPA	33472-5019	A-BLK	GCP	PLR	CPA	M	RR							7	8	SALEABLE		34951-0810	34951-0820
KEY A, BLACK, W/CPA	33472-5020	A-BLK	GCP	PLR	CPA	M	RR		2	3	4		6	7	8	SALEABLE		34951-0810	34951-0820
KEY A, BLACK, W/CPA	33472-5021	A-BLK	GCP	PLR	CPA	M	RR	1	2	3	4	5	6	7	8	SALEABLE		34951-0810	34951-0820
KEY A, BLACK, W/CPA	33472-5022	A-BLK	GCP	PLR	CPA	M	RR	1				5				SALEABLE		34951-0810	34951-0820
KEY A, BLACK, W/O CPA	33472-5023	A-BLK	GCP	PLR		M	RR					5	6	7	8	SALEABLE		34951-0810	34951-0820
KEY A, BLACK, W/O CPA	33472-5024	A-BLK	GCP	PLR		M	RR			3	4					SALEABLE		34951-0810	34951-0820
KEY D, STONE GRAY, W/O CPA	33472-5025	D-SG	GCP	PLR		M	RR				4	5	6			SALEABLE		34951-0810	34951-0820
KEY D, STONE GRAY, W/O CPA	33472-5026	D-SG	GCP	PLR		M	RR				4					SALEABLE		34951-0810	34951-0820
KEY B, LIGHT GRAY, W/O CPA	33472-5027	B-LG	GCP	PLR		M	RR							7	8	SALEABLE		34951-0810	34951-0820
KEY A, BLACK, W/O CPA	33472-5028	A-BLK	GCP	PLR		M	RR	1	2	3	4			7	8	SALEABLE		34951-0810	34951-0820
KEY A, BLACK, W/O CPA	33472-5029	A-BLK	GCP	PLR		M	RR			3	4				8	SALEABLE		34951-0810	34951-0820
KEY A, BLACK, W/O CPA	33472-5030	A-BLK	GCP	PLR		M	RR	1	2	3	4	5		7		SALEABLE		34951-0810	34951-0820
KEY A, BLACK, W/O CPA	33472-5031	A-BLK	GCP	PLR		M	RR					5				SALEABLE		34951-0810	34951-0820
KEY A, BLACK, W/O CPA	33472-5032	A-BLK	GCP	PLR		M	RR		2			5				SALEABLE		34951-0810	34951-0820
KEY B, LIGHT GRAY, W/O CPA	33472-5033	B-LG	GCP	PLR		M	RR	1		3					8	SALEABLE		34951-0810	34951-0820
KEY B, LIGHT GRAY, W/O CPA	33472-5034	B-LG	GCP	PLR		M	RR			3					8	SALEABLE		34951-0810	34951-0820
KEY B, LIGHT GRAY, W/O CPA	33472-5035	B-LG	GCP	PLR		M	RR	1								SALEABLE		34951-0810	34951-0820
KEY A, BLACK, W/O CPA	33472-5036	A-BLK	GCP	PLR		M	RR	1							8	SALEABLE		34951-0810	34951-0820
KEY A, BLACK, W/O CPA	33472-5037	A-BLK	GCP	PLR		M	RR						6		8	SALEABLE		34951-0810	34951-0820
KEY A, BLACK, W/O CPA	33472-5038	A-BLK	GCP	PLR		M	RR	1			4	5	6	7	8	SALEABLE		34951-0810	34951-0820
KEY A, BLACK, W/O CPA	33472-5039	A-BLK	GCP	PLR		M	RR		2					7		SALEABLE		34951-0810	34951-0820
KEY B, LIGHT GRAY, W/O CPA	33472-5040	B-LG	GCP	PLR		M	RR					5		7		SALEABLE		34951-0810	34951-0820
KEY A, BLACK, W/O CPA	33472-5041	A-BLK	GCP	PLR		M	RR				4	5	6	7	8	SALEABLE		34951-0810	34951-0820
KEY A, BLACK, W/O CPA	33472-5042	A-BLK	GCP	PLR		M	RR					5			8	SALEABLE		34951-0810	34951-0820
KEY A, BLACK, W/O CPA	33472-5043	A-BLK	GCP	PLR		M	RR		2		4	5	6			SALEABLE		34951-0810	34951-0820
KEY A, BLACK, W/O CPA	33472-5044	A-BLK	GCP	PLR		M	RR	1	2	3	4		6	7		SALEABLE		34951-0810	34951-0820
KEY A, BLACK, W/O CPA	33472-5045	A-BLK	GCP	PLR		M	RR				4		6			SALEABLE		34951-0810	34951-0820
KEY A, BLACK, W/CPA	33472-5046	A-BLK	GCP	PLR	CPA	M	RR	1						7		SALEABLE		34951-0810	34951-0820
KEY B, LIGHT GRAY, W/O CPA	33472-5047	B-LG	GCP	PLR		M	RR					5				SALEABLE		34951-0810	34951-0820
KEY A, BLACK, W/O CPA	33472-5048	A-BLK	GCP	PLR		M	RR	1	2			5	6		8	SALEABLE		34951-0810	34951-0820
KEY A, BLACK, W/O CPA	33472-5049	A-BLK	GCP	PLR		M	RR	1	2						8	SALEABLE		34951-0810	34951-0820
KEY A, BLACK, W/O CPA	33472-5050	A-BLK	GCP	PLR		M	RR				4	5	6			SALEABLE		34951-0810	34951-0820
KEY A, BLACK, WITH CLIPSLOT, W/O CPA	33472-4901	A-BLK-CLIP	GCO	PLR		M	RR									SALEABLE			
KEY B, LIGHT GRAY, WITH CLIPSLOT, W/O CPA	33472-4902	B-LG-CLIP	GCO	PLR		M	RR									SALEABLE			
KEY C, BROWN, WITH CLIPSLOT, W/O CPA	33472-4903	C-BR-CLIP	GCO	PLR		M	RR									NOT RECOMMENDED	SEE P/N 33472-4922		
KEY D, GREEN, WITH CLIPSLOT, W/O CPA	33472-4904	D-GR-CLIP	GCO	PLR		M	RR									NOT RECOMMENDED	SEE P/N 33472-4923		
KEY D, BLACK, WITH CLIPSLOT, W/O CPA	33472-4905	D-BLK-CLIP	GCO	PLR		M	RR									SALEABLE			
KEY A, BLACK, WITH CLIPSLOT, W/CPA	33472-4906	A-BLK-CLIP	GCO	PLR	CPA	M	RR									SALEABLE			
KEY B, LIGHT GRAY, WITH CLIPSLOT, W/CPA	33472-4907	B-LG-CLIP	GCO	PLR	CPA	M	RR									SALEABLE			
KEY C, BROWN, WITH CLIPSLOT, W/CPA	33472-4908	C-BR-CLIP	GCO	PLR	CPA	M	RR									NOT RECOMMENDED	SEE P/N 33472-4924		
KEY D, GREEN, WITH CLIPSLOT, W/CPA	33472-4909	D-GR-CLIP	GCO	PLR	CPA	M	RR									NOT RECOMMENDED	SEE P/N 33472-4925		
KEY A, BLACK, WITH CLIPSLOT, W/O CPA	33472-4910	A-BLK-CLIP	GCP	PLR		M	RR				4					SALEABLE			
KEY A, BLACK, WITH CLIPSLOT, W/O CPA	33472-4920	A-BLK-CLIP	GCP	PLR		M	RR				4				8	SALEABLE			
KEY A, BLACK, WITH CLIPSLOT, W/O CPA	33472-4921	A-BLK-CLIP	GCP	PLR		M	RR								8	SALEABLE			
KEY C, DARK GRAY, WITH CLIPSLOT, W/O CPA	33472-4922	C-DG-CLIP	GCO	PLR		M	RR									SALEABLE			
KEY D, STONE GRAY, WITH CLIPSLOT, W/O CPA	33472-4923	D-SG-CLIP	GCO	PLR		M	RR									SALEABLE			
KEY C, DARK GRAY, WITH CLIPSLOT, W/CPA	33472-4924	C-DG-CLIP	GCO	PLR	CPA	M	RR									SALEABLE			
KEY D, STONE GRAY, WITH CLIPSLOT, W/CPA	33472-4925	D-SG-CLIP	GCO	PLR	CPA	M	RR									SALEABLE			
KEY B, LIGHT GRAY, WITH CLIPSLOT, W/O CPA	33472-4926	B-LG-CLIP	GCP	PLR		M	RR				4				8	SALEABLE			
KEY A, BLACK, WITH CLIPSLOT, W/CPA	33472-4927	A-BLK-CLIP	GCP	PLR	CPA	M	RR				4				8	SALEABLE			
KEY B, LIGHT GRAY, WITH CLIPSLOT, W/CPA	33472-4928	B-LG-CLIP	GCP	PLR	CPA	M	RR				4				8	SALEABLE			
KEY A, BLACK, WITH CLIPSLOT, W/O CPA	33472-4929	A-BLK-CLIP	GCP	PLR		M	RR				4	5		7	8	SALEABLE			
KEY A, BLACK, WITH CLIPSLOT, W/O CPA	33472-4930	A-BLK-CLIP	GCP	PLR		M	RR		2	3	4	5		7	8	SALEABLE			
KEY A, BLACK, WITH CLIPSLOT, W/O CPA	33472-4931	A-BLK-CLIP	GCP	PLR		M	RR	1	2	3			6			SALEABLE			
KEY A, BLACK, WITH CLIPSLOT, W/O CPA	33472-4932	A-BLK-CLIP	GCP	PLR		M	RR	1					6			SALEABLE			
KEY A, BLACK, WITH CLIPSLOT, W/CPA	33472-4933	A-BLK-CLIP	GCP	PLR	CPA	M	RR								8	SALEABLE			

molex

MX150 RECEPTACLE 2X4 SEALED ASSEMBLY MAT SEAL
BOM AND PIN OUT SHEET

ASSEMBLY DESCRIPTION	ASSEMBLY PART NUMBER	COMPONENT						BLOCKED TERMINALS								STATUS	COMMENTS	OPTIONAL ATTATCHMENTS SOLD SEPERATELY	
		THE PRESENCE OF AN ABBREVIATION INDICATES THE PRESENCE OF THAT COMPONENT.						CAVITY WITH A NUMBER INDICATES BLOCKED TERMINAL POSITION CAVITY WITHOUT A NUMBER INDICATES OPEN TERMINAL POSITION											
		HOUSING KEY/COLOR	GROMMET CAP	PLR	CPA	MAT SEAL	RING SEAL	1	2	3	4	5	6	7	8			BACKSHELL WITH RIBS	BACKSHELL WITHOUT RIBS
KEY B, LIGHT GRAY, WITH CLIPSLOT, W/CPA	33472-4934	B-LG-CLIP	GCP	PLR	CPA	M	RR								8	SALEABLE			
KEY A, BLACK, WITH CLIPSLOT, W/CPA	33472-4935	A-BLK-CLIP	GCP	PLR	CPA	M	RR		2	3	4		6	7	8	SALEABLE			
KEY A, BLACK, WITH CLIPSLOT, W/O CPA	33472-4936	A-BLK-CLIP	GCP	PLR		M	RR						6	7	8	SALEABLE			
KEY A, BLACK, WITH CLIPSLOT, W/O CPA	33472-4937	A-BLK-CLIP	GCP	PLR		M	RR					5			8	SALEABLE			
KEY A, BLACK, WITH CLIPSLOT, W/O CPA	33472-4938	A-BLK-CLIP	GCP	PLR		M	RR					5				SALEABLE			
KEY A, BLACK, WITH CLIPSLOT, W/O CPA	33472-4939	A-BLK-CLIP	GCP	PLR		M	RR				4	5	6	7	8	SALEABLE			

molex

MX150 RECEPTACLE 2X6 SEALED ASSEMBLY MAT SEAL
BOM AND PIN OUT SHEET

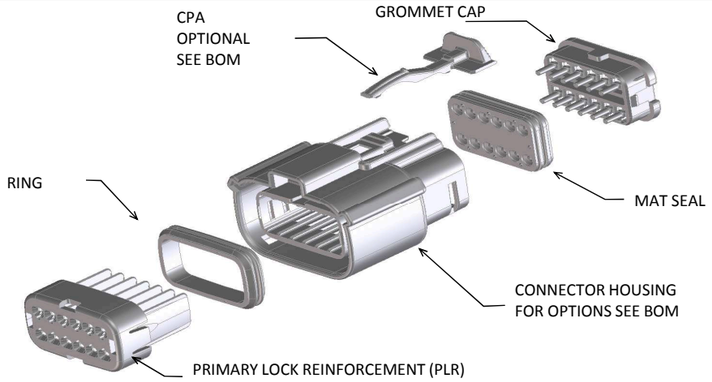

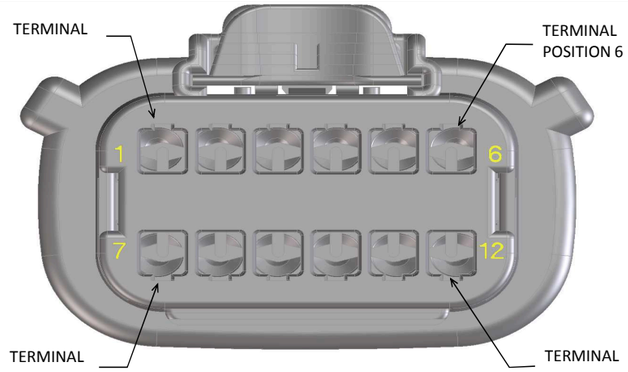

ABBREVIATION	DESCRIPTION	COLOR	MATERIAL
A-BLK	HOUSING, KEYING OPTION A	BLACK	SPS/NYLON GF20
B-LG	HOUSING, KEYING OPTION B	LIGHT GRAY	SPS/NYLON GF20
C-BR	HOUSING, KEYING OPTION C	BROWN	SPS/NYLON GF20
D-GR	HOUSING, KEYING OPTION D	GREEN	SPS/NYLON GF20
C-DG	HOUSING, KEYING OPTION C	DARK GRAY	SPS/NYLON GF20
D-SG	HOUSING, KEYING OPTION D	STONE GRAY	SPS/NYLON GF20
A-YW	HOUSING, KEYING OPTION A	YELLOW	SPS/NYLON GF20
A-BLK-CLIP	HOUSING, KEYING OPTION A WITH CLIPSLOT	BLACK	SPS/NYLON GF20
B-LG-CLIP	HOUSING, KEYING OPTION B WITH CLIPSLOT	LIGHT GRAY	SPS/NYLON GF20
C-BR-CLIP	HOUSING, KEYING OPTION C WITH CLIPSLOT	BROWN	SPS/NYLON GF20
D-GR-CLIP	HOUSING, KEYING OPTION D WITH CLIPSLOT	GREEN	SPS/NYLON GF20
C-DG-CLIP	HOUSING, KEYING OPTION C WITH CLIPSLOT	DARK GRAY	SPS/NYLON GF20
D-SG-CLIP	HOUSING, KEYING OPTION D WITH CLIPSLOT	STONE GRAY	SPS/NYLON GF20
GC	GROMMET CAP	BLACK	SPS/NYLON GF20
PLR	PLR	NATURAL	SPS/NYLON GF20
CPA	CPA	RED	PBT GF30
M	MAT SEAL	LIGHT BLUE	INHERENTLY LUBRICATED SILICONE
R	RING SEAL	GREEN	INHERENTLY LUBRICATED SILICONE

FOR ADDITIONAL INFORMATION SEE SD-33472-0001

ASSEMBLY DESCRIPTION	ASSEMBLY PART NUMBER	COMPONENT						BLOCKED TERMINALS												STATUS	COMMENTS	OPTIONAL ATTATCHMENTS SOLD SEPERATELY	
		THE PRESENCE OF AN ABBREVIATION INDICATES THE PRESENCE OF THAT COMPONENT.						CAVITY WITH A NUMBER INDICATES BLOCKED TERMINAL POSITION CAVITY WITHOUT A NUMBER INDICATES OPEN TERMINAL POSITION															
		HOUSING KEY/COLOR	GROMMET CAP	PLR	CPA	MAT SEAL	RING SEAL	1	2	3	4	5	6	7	8	9	10	11	12			BACKSHELL WITH RIBS	BACKSHELL WITHOUT RIBS
KEY A, BLACK, W/O CPA	33472-1201	A-BLK	GC	PLR		M	R													SALEABLE		34951-1210	34951-1220
KEY B, LIGHT GRAY, W/O CPA	33472-1202	B-LG	GC	PLR		M	R													SALEABLE		34951-1210	34951-1220
KEY C, BROWN, W/O CPA	33472-1203	C-BR	GC	PLR		M	R													NOT RECOMMENDED	SEE P/N 33472-1253	34951-1210	34951-1220
KEY D, GREEN, W/O CPA	33472-1204	D-GR	GC	PLR		M	R													NOT RECOMMENDED	SEE P/N 33472-1254	34951-1210	34951-1220
VOID KEY	33472-1205																						
KEY A, BLACK, W/CPA	33472-1206	A-BLK	GC	PLR	CPA	M	R													SALEABLE		34951-1210	34951-1220
KEY B, LIGHT GRAY, W/CPA	33472-1207	B-LG	GC	PLR	CPA	M	R													SALEABLE		34951-1210	34951-1220
KEY C, BROWN, W/CPA	33472-1208	C-BR	GC	PLR	CPA	M	R													NOT RECOMMENDED	SEE P/N 33472-1259	34951-1210	34951-1220
KEY D, GREEN, W/CPA	33472-1209	D-GR	GC	PLR	CPA	M	R													NOT RECOMMENDED	SEE P/N 33472-1260	34951-1210	34951-1220
VOID KEY	33472-1210																						
KEY A, BLACK, W/O CPA	33472-1211	A-BLK	GC	PLR		M	R						6							SALEABLE		34951-1210	34951-1220
KEY B, LIGHT GRAY, W/O CPA	33472-1212	B-LG	GC	PLR		M	R						6							SALEABLE		34951-1210	34951-1220
KEY C, BROWN, W/O CPA	33472-1213	C-BR	GC	PLR		M	R						6							NOT RECOMMENDED		34951-1210	34951-1220
KEY D, GREEN, W/O CPA	33472-1214	D-GR	GC	PLR		M	R						6							NOT RECOMMENDED		34951-1210	34951-1220
VOID KEY	33472-1215																						
KEY A, BLACK, W/CPA	33472-1216	A-BLK	GC	PLR	CPA	M	R						6							SALEABLE		34951-1210	34951-1220
KEY B, LIGHT GRAY, W/CPA	33472-1217	B-LG	GC	PLR	CPA	M	R						6							SALEABLE		34951-1210	34951-1220
KEY C, BROWN, W/CPA	33472-1218	C-BR	GC	PLR	CPA	M	R						6							NOT RECOMMENDED		34951-1210	34951-1220
KEY D, GREEN, W/CPA	33472-1219	D-GR	GC	PLR	CPA	M	R						6							NOT RECOMMENDED		34951-1210	34951-1220
VOID KEY	33472-1220																						
KEY A, BLACK, W/O CPA	33472-1221	A-BLK	GC	PLR		M	R						6	7						SALEABLE		34951-1210	34951-1220
KEY B, LIGHT GRAY, W/O CPA	33472-1222	B-LG	GC	PLR		M	R						6	7						SALEABLE		34951-1210	34951-1220
KEY C, BROWN, W/O CPA	33472-1223	C-BR	GC	PLR		M	R						6	7						NOT RECOMMENDED		34951-1210	34951-1220
KEY D, GREEN, W/O CPA	33472-1224	D-GR	GC	PLR		M	R						6	7						NOT RECOMMENDED		34951-1210	34951-1220
VOID KEY	33472-1225																						
KEY A, BLACK, W/CPA	33472-1226	A-BLK	GC	PLR	CPA	M	R						6	7						SALEABLE		34951-1210	34951-1220
KEY B, LIGHT GRAY, W/CPA	33472-1227	B-LG	GC	PLR	CPA	M	R						6	7						SALEABLE		34951-1210	34951-1220
KEY C, BROWN, W/CPA	33472-1228	C-BR	GC	PLR	CPA	M	R						6	7						NOT RECOMMENDED		34951-1210	34951-1220
KEY D, GREEN, W/CPA	33472-1229	D-GR	GC	PLR	CPA	M	R						6	7						NOT RECOMMENDED		34951-1210	34951-1220
VOID KEY	33472-1230																						
KEY A, BLACK, W/O CPA	33472-1231	A-BLK	GC	PLR		M	R	1					6	7						SALEABLE		34951-1210	34951-1220
KEY B, LIGHT GRAY, W/O CPA	33472-1232	B-LG	GC	PLR		M	R	1					6	7						SALEABLE		34951-1210	34951-1220
KEY C, BROWN, W/O CPA	33472-1233	C-BR	GC	PLR		M	R	1					6	7						NOT RECOMMENDED		34951-1210	34951-1220
KEY D, GREEN, W/O CPA	33472-1234	D-GR	GC	PLR		M	R	1					6	7						NOT RECOMMENDED		34951-1210	34951-1220
VOID KEY	33472-1235																						
KEY A, BLACK, W/CPA	33472-1236	A-BLK	GC	PLR	CPA	M	R	1					6	7						SALEABLE		34951-1210	34951-1220
KEY B, LIGHT GRAY, W/CPA	33472-1237	B-LG	GC	PLR	CPA	M	R	1					6	7						SALEABLE		34951-1210	34951-1220
KEY C, BROWN, W/CPA	33472-1238	C-BR	GC	PLR	CPA	M	R	1					6	7						NOT RECOMMENDED		34951-1210	34951-1220
KEY D, GREEN, W/CPA	33472-1239	D-GR	GC	PLR	CPA	M	R	1					6	7						NOT RECOMMENDED		34951-1210	34951-1220
VOID KEY	33472-1240																						
KEY A, BLACK, W/O CPA	33472-1241	A-BLK	GC	PLR		M	R	1					6	7					12	SALEABLE		34951-1210	34951-1220
KEY B, LIGHT GRAY, W/O CPA	33472-1242	B-LG	GC	PLR		M	R	1					6	7					12	SALEABLE		34951-1210	34951-1220
KEY C, BROWN, W/O CPA	33472-1243	C-BR	GC	PLR		M	R	1					6	7					12	NOT RECOMMENDED		34951-1210	34951-1220
KEY D, GREEN, W/O CPA	33472-1244	D-GR	GC	PLR		M	R	1					6	7					12	NOT RECOMMENDED		34951-1210	34951-1220
VOID KEY	33472-1245																						
KEY A, BLACK, W/CPA	33472-1246	A-BLK	GC	PLR	CPA	M	R	1					6	7					12	SALEABLE		34951-1210	34951-1220
KEY B, LIGHT GRAY, W/CPA	33472-1247	B-LG	GC	PLR	CPA	M	R	1					6	7					12	SALEABLE		34951-1210	34951-1220
KEY C, BROWN, W/CPA	33472-1248	C-BR	GC	PLR	CPA	M	R	1					6	7					12	NOT RECOMMENDED		34951-1210	34951-1220
KEY D, GREEN, W/CPA	33472-1249	D-GR	GC	PLR	CPA	M	R	1					6	7					12	NOT RECOMMENDED		34951-1210	34951-1220
VOID KEY	33472-1250																						
KEY A, BLACK, W/O CPA	33472-1251	A-BLK	GC	PLR		M	R						6						12	SALEABLE		34951-1210	34951-1220
KEY A, BLACK, W/CPA	33472-1252	A-BLK	GC	PLR	CPA	M	R									9	10			SALEABLE		34951-1210	34951-1220
KEY C, DARK GRAY, W/O CPA	33472-1253	C-DG	GC	PLR		M	R													SALEABLE		34951-1210	34951-1220
KEY D, STONE GRAY, W/O CPA	33472-1254	D-SG	GC	PLR		M	R													SALEABLE		34951-1210	34951-1220
KEY A, BLACK, W/CPA	33472-1255	A-BLK	GC	PLR	CPA	M	R											11		SALEABLE		34951-1210	34951-1220
KEY A, BLACK, W/CPA	33472-1256	A-BLK	GC	PLR	CPA	M	R									9	10	11	12	SALEABLE		34951-1210	34951-1220
KEY A, BLACK, W/O CPA	33472-1257	A-BLK	GC	PLR		M	R								8		10		12	SALEABLE		34951-1210	34951-1220
KEY A, BLACK, W/O CPA	33472-1258	A-BLK	GC	PLR		M	R	1	2	3	4	5	6	7	8	9	10	11	12	SALEABLE		34951-1210	34951-1220
KEY C, DARK GRAY, W/CPA	33472-1259	C-DG	GC	PLR	CPA	M	R													SALEABLE		34951-1210	34951-1220
KEY D, STONE GRAY, W/CPA	33472-1260	D-SG	GC	PLR	CPA	M	R													SALEABLE		34951-1210	34951-1220
KEY A, BLACK, W/O CPA	33472-1261	A-BLK	GC	PLR		M	R									9	10		12	SALEABLE		34951-1210	34951-1220

molex

MX150 RECEPTACLE 2X6 SEALED ASSEMBLY MAT SEAL
BOM AND PIN OUT SHEET

ASSEMBLY DESCRIPTION	ASSEMBLY PART NUMBER	COMPONENT						BLOCKED TERMINALS												STATUS	COMMENTS	OPTIONAL ATTATCHMENTS SOLD SEPERATELY	
		THE PRESENCE OF AN ABBREVIATION INDICATES THE PRESENCE OF THAT COMPONENT.						CAVITY WITH A NUMBER INDICATES BLOCKED TERMINAL POSITION CAVITY WITHOUT A NUMBER INDICATES OPEN TERMINAL POSITION															
		HOUSING KEY/COLOR	GROMMET CAP	PLR	CPA	MAT SEAL	RING SEAL	1	2	3	4	5	6	7	8	9	10	11	12			BACKSHELL WITH RIBS	BACKSHELL WITHOUT RIBS
KEY A, BLACK, W/CPA	33472-1262	A-BLK	GC	PLR	CPA	M	R								8	9	10	11	12	SALEABLE		34951-1210	34951-1220
KEY B, LIGHT GRAY, W/CPA	33472-1263	B-LG	GC	PLR	CPA	M	R												12	SALEABLE		34951-1210	34951-1220
KEY C, DARK GRAY, W/CPA	33472-1264	C-DG	GC	PLR	CPA	M	R											11	12	SALEABLE		34951-1210	34951-1220
KEY D, STONE GRAY, W/CPA	33472-1265	D-SG	GC	PLR	CPA	M	R												12	SALEABLE		34951-1210	34951-1220
KEY A, BLACK, W/CPA	33472-1266	A-BLK	GC	PLR	CPA	M	R											11	12	SALEABLE		34951-1210	34951-1220
KEY D, STONE GRAY, W/CPA	33472-1267	D-SG	GC	PLR	CPA	M	R	1					6	7						SALEABLE		34951-1210	34951-1220
KEY A, BLACK, W/CPA	33472-1268	A-BLK	GC	PLR	CPA	M	R	1						7						SALEABLE		34951-1210	34951-1220
KEY A, BLACK, W/CPA	33472-1269	A-BLK	GC	PLR	CPA	M	R	1	2		4		6	7	8		10	11	12	SALEABLE		34951-1210	34951-1220
KEY A, BLACK, W/CPA	33472-1270	A-BLK	GC	PLR	CPA	M	R							7		9		11	12	SALEABLE		34951-1210	34951-1220
KEY A, BLACK, W/CPA	33472-1271	A-BLK	GC	PLR	CPA	M	R				4		6				10	11	12	SALEABLE		34951-1210	34951-1220
KEY A, BLACK, W/CPA	33472-1272	A-BLK	GC	PLR	CPA	M	R						6			9	10	11	12	SALEABLE		34951-1210	34951-1220
KEY A, BLACK, W/O CPA	33472-1273	A-BLK	GC	PLR		M	R						6			9	10	11	12	SALEABLE		34951-1210	34951-1220
KEY A, BLACK, W/CPA	33472-1274	A-BLK	GC	PLR	CPA	M	R						6					11	12	SALEABLE		34951-1210	34951-1220
KEY A, BLACK, W/O CPA	33472-1275	A-BLK	GC	PLR		M	R	1	2	3	4	5	6		8					SALEABLE		34951-1210	34951-1220
KEY A, BLACK, W/O CPA	33472-1276	A-BLK	GC	PLR		M	R	1					6							SALEABLE		34951-1210	34951-1220
KEY A, BLACK, W/O CPA	33472-1277	A-BLK	GC	PLR		M	R	1						7					12	SALEABLE		34951-1210	34951-1220
KEY B, LIGHT GRAY, W/CPA	33472-1278	B-LG	GC	PLR	CPA	M	R										10	11		SALEABLE		34951-1210	34951-1220
KEY A, BLACK, W/O CPA	33472-1279	A-BLK	GC	PLR		M	R							7				11		SALEABLE		34951-1210	34951-1220
KEY A, BLACK, W/O CPA	33472-1280	A-BLK	GC	PLR		M	R		2					7						SALEABLE		34951-1210	34951-1220
KEY A, BLACK, W/O CPA	33472-1281	A-BLK	GC	PLR		M	R	1			4					9			12	SALEABLE		34951-1210	34951-1220
KEY A, BLACK, W/CPA	33472-1282	A-BLK	GC	PLR	CPA	M	R	1	2				6	7	8				12	SALEABLE		34951-1210	34951-1220
KEY A, BLACK, W/CPA	33472-1283	A-BLK	GC	PLR	CPA	M	R	1						7					12	SALEABLE		34951-1210	34951-1220
KEY A, BLACK, W/CPA	33472-1284	A-BLK	GC	PLR	CPA	M	R	1	2	3	4	5	6		8					SALEABLE		34951-1210	34951-1220
KEY A, BLACK, W/CPA	33472-1285	A-BLK	GC	PLR	CPA	M	R	1					6							SALEABLE		34951-1210	34951-1220
KEY C, DARK GRAY, W/CPA	33472-1286	C-DG	GC	PLR	CPA	M	R	1					6	7						SALEABLE		34951-1210	34951-1220
KEY A, BLACK, W/CPA	33472-1287	A-BLK	GC	PLR	CPA	M	R										10	11	12	SALEABLE		34951-1210	34951-1220
KEY C, DARK GRAY, W/CPA	33472-1288	C-DG	GC	PLR	CPA	M	R												12	SALEABLE		34951-1210	34951-1220
KEY C, DARK GRAY, W/CPA	33472-1289	C-DG	GC	PLR	CPA	M	R									9	10	11	12	SALEABLE		34951-1210	34951-1220
KEY A, BLACK, W/CPA	33472-1290	A-BLK	GC	PLR	CPA	M	R									9				SALEABLE		34951-1210	34951-1220
KEY A, BLACK, W/CPA	33472-1291	A-BLK	GC	PLR	CPA	M	R	1				5	6	7	8				12	SALEABLE		34951-1210	34951-1220
KEY A, YELLOW, W/CPA	33472-1292	A-YW	GC	PLR	CPA	M	R													SALEABLE		34951-1210	34951-1220
KEY A, BLACK, W/CPA	33472-1293	A-BLK	GC	PLR	CPA	M	R	1												SALEABLE		34951-1210	34951-1220
KEY A, BLACK, W/CPA	33472-1294	A-BLK	GC	PLR	CPA	M	R				4			7	8					SALEABLE		34951-1210	34951-1220
KEY D, STONE GRAY, W/CPA	33472-1295	D-SG	GC	PLR	CPA	M	R								8		10		12	SALEABLE		34951-1210	34951-1220
KEY A, BLACK, W/CPA	33472-1296	A-BLK	GC	PLR	CPA	M	R								8	9	10	11		SALEABLE		34951-1210	34951-1220
KEY A, BLACK, W/CPA	33472-1297	A-BLK	GC	PLR	CPA	M	R	1	2	3	4	5	6			9	10	11	12	SALEABLE		34951-1210	34951-1220
KEY A, BLACK, WITH CLIPSLOT, W/O CPA	33472-1301	A-BLK-CLIP	GC	PLR		M	R													SALEABLE			
KEY B, LIGHT GRAY, WITH CLIPSLOT, W/O CPA	33472-1302	B-LG-CLIP	GC	PLR		M	R													SALEABLE			
KEY C, BROWN, WITH CLIPSLOT, W/O CPA	33472-1303	C-BR-CLIP	GC	PLR		M	R													NOT RECOMMENDED	SEE P/N 33472-1407		
KEY D, GREEN, WITH CLIPSLOT, W/O CPA	33472-1304	D-GR-CLIP	GC	PLR		M	R													NOT RECOMMENDED	SEE P/N 33472-1408		
VOID KEY	33472-1305																						
KEY A, BLACK, WITH CLIPSLOT, W/CPA	33472-1306	A-BLK-CLIP	GC	PLR	CPA	M	R													SALEABLE			
KEY B, LIGHT GRAY, WITH CLIPSLOT, W/CPA	33472-1307	B-LG-CLIP	GC	PLR	CPA	M	R													SALEABLE			
KEY C, BROWN, WITH CLIPSLOT, W/CPA	33472-1308	C-BR-CLIP	GC	PLR	CPA	M	R													NOT RECOMMENDED	SEE P/N 33472-1409		
KEY D, GREEN, WITH CLIPSLOT, W/CPA	33472-1309	D-GR-CLIP	GC	PLR	CPA	M	R													NOT RECOMMENDED	SEE P/N 33472-1410		
VOID KEY	33472-1310																						
KEY A, BLACK, WITH CLIPSLOT, W/O CPA	33472-1311	A-BLK-CLIP	GC	PLR		M	R	1	2	3	4	5	6	7	8	9	10	11	12	SALEABLE			
KEY B, LIGHT GRAY, WITH CLIPSLOT, W/O CPA	33472-1312	B-LG-CLIP	GC	PLR		M	R	1	2	3	4	5	6	7	8	9	10	11	12	SALEABLE			
KEY C, BROWN, WITH CLIPSLOT, W/O CPA	33472-1313	C-BR-CLIP	GC	PLR		M	R	1	2	3	4	5	6	7	8	9	10	11	12	NOT RECOMMENDED	SEE P/N 33472-1411		
KEY D, GREEN, WITH CLIPSLOT, W/O CPA	33472-1314	D-GR-CLIP	GC	PLR		M	R	1	2	3	4	5	6	7	8	9	10	11	12	NOT RECOMMENDED	SEE P/N 33472-1412		
VOID KEY	33472-1315																						
KEY A, BLACK, WITH CLIPSLOT, W/CPA	33472-1316	A-BLK-CLIP	GC	PLR	CPA	M	R	1	2	3	4	5	6	7	8	9	10	11	12	SALEABLE			
KEY B, LIGHT GRAY, WITH CLIPSLOT, W/CPA	33472-1317	B-LG-CLIP	GC	PLR	CPA	M	R	1	2	3	4	5	6	7	8	9	10	11	12	SALEABLE			
KEY C, BROWN, WITH CLIPSLOT, W/CPA	33472-1318	C-BR-CLIP	GC	PLR	CPA	M	R	1	2	3	4	5	6	7	8	9	10	11	12	NOT RECOMMENDED	SEE P/N 33472-1413		
KEY D, GREEN, WITH CLIPSLOT, W/CPA	33472-1319	D-GR-CLIP	GC	PLR	CPA	M	R	1	2	3	4	5	6	7	8	9	10	11	12	NOT RECOMMENDED	SEE P/N 33472-1414		
VOID KEY	33472-1320																						
KEY A, BLACK, WITH CLIPSLOT, W/O CPA	33472-1321	A-BLK-CLIP	GC	PLR		M	R		2	3					8			11		SALEABLE			
KEY A, BLACK, WITH CLIPSLOT, W/O CPA	33472-1322	A-BLK-CLIP	GC	PLR		M	R		2	3		5	6	7	8			11		SALEABLE			
KEY A, BLACK, WITH CLIPSLOT, W/O CPA	33472-1323	A-BLK-CLIP	GC	PLR		M	R						6	7						SALEABLE			
KEY A, BLACK, WITH CLIPSLOT, W/O CPA	33472-1324	A-BLK-CLIP	GC	PLR		M	R		2	3			6	7	8		10	11		SALEABLE			
KEY A, BLACK, WITH CLIPSLOT, W/O CPA	33472-1325	A-BLK-CLIP	GC	PLR		M	R	1				5	6	7	8					SALEABLE			
KEY B, LIGHT GRAY, WITH CLIPSLOT, W/O CPA	33472-1326	B-LG-CLIP	GC	PLR		M	R	1				5	6	7	8	9	10			SALEABLE			
KEY A, BLACK, WITH CLIPSLOT, W/O CPA	33472-1327	A-BLK-CLIP	GC	PLR		M	R		2											SALEABLE			
KEY B, LIGHT GRAY, WITH CLIPSLOT, W/O CPA	33472-1328	B-LG-CLIP	GC	PLR		M	R		2							9	10			SALEABLE			
KEY A, BLACK, WITH CLIPSLOT, W/O CPA	33472-1329	A-BLK-CLIP	GC	PLR		M	R		2	3					8	9	10	11		SALEABLE			
KEY A, BLACK, WITH CLIPSLOT, W/O CPA	33472-1330	A-BLK-CLIP	GC	PLR		M	R							7	8	9	10	11		SALEABLE			
KEY A, BLACK, WITH CLIPSLOT, W/O CPA	33472-1331	A-BLK-CLIP	GC	PLR		M	R							7	8					SALEABLE			
KEY A, BLACK, WITH CLIPSLOT, W/O CPA	33472-1332	A-BLK-CLIP	GC	PLR		M	R		2							9	10			SALEABLE			
KEY A, BLACK, WITH CLIPSLOT, W/O CPA	33472-1333	A-BLK-CLIP	GC	PLR		M	R		2		4									SALEABLE			
KEY A, BLACK, WITH CLIPSLOT, W/CPA	33472-1334	A-BLK-CLIP	GC	PLR	CPA	M	R									9	10	11	12	SALEABLE			
KEY A, BLACK, WITH CLIPSLOT, W/CPA	33472-1335	A-BLK-CLIP	GC	PLR	CPA	M	R											11		SALEABLE			
KEY A, BLACK, WITH CLIPSLOT, W/O CPA	33472-1336	A-BLK-CLIP	GC	PLR		M	R		2	3	4			7	8					SALEABLE			
KEY A, BLACK, WITH CLIPSLOT, W/O CPA	33472-1337	A-BLK-CLIP	GC	PLR		M	R	1		3	4	5	6	7	8					SALEABLE			
KEY A, BLACK, WITH CLIPSLOT, W/CPA	33472-1338	A-BLK-CLIP	GC	PLR	CPA	M	R										10	11	12	SALEABLE			
KEY A, BLACK, WITH CLIPSLOT, W/O CPA	33472-1339	A-BLK-CLIP	GC	PLR		M	R				4	5	6	7	8	9				SALEABLE			
KEY A, BLACK, WITH CLIPSLOT, W/O CPA	33472-1340	A-BLK-CLIP	GC	PLR		M	R						6	7	8					SALEABLE			
KEY A, BLACK, WITH CLIPSLOT, W/O CPA	33472-1341	A-BLK-CLIP	GC	PLR		M	R		2		4	5			8		10	11		SALEABLE			
KEY A, BLACK, WITH CLIPSLOT, W/O CPA	33472-1342	A-BLK-CLIP	GC	PLR		M	R			3	4					9	10			SALEABLE			
KEY A, BLACK, WITH CLIPSLOT, W/O CPA	33472-1343	A-BLK-CLIP	GC	PLR		M	R	1					6	7						SALEABLE			
KEY A, BLACK, WITH CLIPSLOT, W/O CPA	33472-1344	A-BLK-CLIP	GC	PLR		M	R											11		SALEABLE			
KEY A, BLACK, WITH CLIPSLOT, W/O CPA	33472-1345	A-BLK-CLIP	GC	PLR		M	R							7						SALEABLE			
KEY A, BLACK, WITH CLIPSLOT, W/O CPA	33472-1346	A-BLK-CLIP	GC	PLR		M	R		2	3	4	5					10	11	12	SALEABLE			
KEY A, BLACK, WITH CLIPSLOT, W/O CPA	33472-1347	A-BLK-CLIP	GC	PLR		M	R	1					6	7		9				SALEABLE			
KEY A, BLACK, WITH CLIPSLOT, W/O CPA	33472-1348	A-BLK-CLIP	GC	PLR		M	R		2	3	4	5	6	7	8		10	11	12	SALEABLE			
KEY A, BLACK, WITH CLIPSLOT, W/CPA	33472-1349	A-BLK-CLIP	GC	PLR	CPA	M	R			3		5						11		SALEABLE			
KEY A, BLACK, WITH CLIPSLOT, W/O CPA	33472-1350	A-BLK-CLIP	GC	PLR		M	R		2	3								11		SALEABLE			
KEY A, BLACK, WITH CLIPSLOT, W/O CPA	33472-1351	A-BLK-CLIP	GC	PLR		M	R	1	2	3	4	5				9	10	11	12	SALEABLE			
KEY A, BLACK, WITH CLIPSLOT, W/O CPA	33472-1352	A-BLK-CLIP	GC	PLR		M	R											11	12	SALEABLE			
KEY A, BLACK, WITH CLIPSLOT, W/O CPA	33472-1353	A-BLK-CLIP	GC	PLR		M	R		2	3						9	10	11		SALEABLE			

MX150 RECEPTACLE 2X6 SEALED ASSEMBLY MAT SEAL
BOM AND PIN OUT SHEET

ASSEMBLY DESCRIPTION	ASSEMBLY PART NUMBER	COMPONENT						BLOCKED TERMINALS												STATUS	COMMENTS	OPTIONAL ATTATCHMENTS SOLD SEPERATELY	
		THE PRESENCE OF AN ABBREVIATION INDICATES THE PRESENCE OF THAT COMPONENT.						CAVITY WITH A NUMBER INDICATES BLOCKED TERMINAL POSITION CAVITY WITHOUT A NUMBER INDICATES OPEN TERMINAL POSITION															
		HOUSING KEY/COLOR	GROMMET CAP	PLR	CPA	MAT SEAL	RING SEAL	1	2	3	4	5	6	7	8	9	10	11	12			BACKSHELL WITH RIBS	BACKSHELL WITHOUT RIBS
KEY A, BLACK, WITH CLIPSLOT, W/O CPA	33472-1354	A-BLK-CLIP	GC	PLR		M	R	1	2	3	4	5			8	9	10	11	12	SALEABLE			
KEY A, BLACK, WITH CLIPSLOT, W/O CPA	33472-1355	A-BLK-CLIP	GC	PLR		M	R	1	2	3	4	5							12	SALEABLE			
KEY A, BLACK, WITH CLIPSLOT, W/O CPA	33472-1356	A-BLK-CLIP	GC	PLR		M	R			3	4	5								SALEABLE			
KEY A, BLACK, WITH CLIPSLOT, W/O CPA	33472-1357	A-BLK-CLIP	GC	PLR		M	R			3	4	5	6	7	8	9	10	11		SALEABLE			
KEY A, BLACK, WITH CLIPSLOT, W/O CPA	33472-1358	A-BLK-CLIP	GC	PLR		M	R		2	3					8	9	10	11	12	SALEABLE			
KEY A, BLACK, WITH CLIPSLOT, W/CPA	33472-1359	A-BLK-CLIP	GC	PLR	CPA	M	R					5			8	9		11		SALEABLE			
KEY A, BLACK, WITH CLIPSLOT, W/O CPA	33472-1360	A-BLK-CLIP	GC	PLR		M	R		2	3					8	9				SALEABLE			
KEY A, BLACK, WITH CLIPSLOT, W/O CPA	33472-1361	A-BLK-CLIP	GC	PLR		M	R	1	2	3								11	12	SALEABLE			
KEY A, BLACK, WITH CLIPSLOT, W/O CPA	33472-1362	A-BLK-CLIP	GC	PLR		M	R	1	2	3	4		6		8		10	11	12	SALEABLE			
KEY A, BLACK, WITH CLIPSLOT, W/O CPA	33472-1363	A-BLK-CLIP	GC	PLR		M	R		2		4		6		8		10	11	12	SALEABLE			
KEY A, BLACK, WITH CLIPSLOT, W/O CPA	33472-1364	A-BLK-CLIP	GC	PLR		M	R											11	12	SALEABLE			
KEY A, BLACK, WITH CLIPSLOT, W/O CPA	33472-1365	A-BLK-CLIP	GC	PLR		M	R	1	2	3	4	5	6			9				SALEABLE			
KEY A, BLACK, WITH CLIPSLOT, W/O CPA	33472-1366	A-BLK-CLIP	GC	PLR		M	R						6			9				SALEABLE			
KEY A, BLACK, WITH CLIPSLOT, W/O CPA	33472-1367	A-BLK-CLIP	GC	PLR		M	R		2					7	8	9				SALEABLE			
KEY A, BLACK, WITH CLIPSLOT, W/O CPA	33472-1368	A-BLK-CLIP	GC	PLR		M	R			3	4	5	6	7						SALEABLE			
KEY A, BLACK, WITH CLIPSLOT, W/O CPA	33472-1369	A-BLK-CLIP	GC	PLR		M	R	1	2	3	4	5	6	7					12	SALEABLE			
KEY A, BLACK, WITH CLIPSLOT, W/O CPA	33472-1370	A-BLK-CLIP	GC	PLR		M	R	1	2	3	4	5		7	8	9	10	11		SALEABLE			
KEY A, BLACK, WITH CLIPSLOT, W/O CPA	33472-1371	A-BLK-CLIP	GC	PLR		M	R		2		4		6		8		10	11		SALEABLE			
KEY A, BLACK, WITH CLIPSLOT, W/O CPA	33472-1372	A-BLK-CLIP	GC	PLR		M	R								8					SALEABLE			
KEY A, BLACK, WITH CLIPSLOT, W/O CPA	33472-1373	A-BLK-CLIP	GC	PLR		M	R	1		3	4	5	6	7	8		10	11	12	SALEABLE			
KEY A, BLACK, WITH CLIPSLOT, W/O CPA	33472-1374	A-BLK-CLIP	GC	PLR		M	R						6			9	10	11	12	SALEABLE			
KEY A, BLACK, WITH CLIPSLOT, W/O CPA	33472-1375	A-BLK-CLIP	GC	PLR		M	R												12	SALEABLE			
KEY A, BLACK, WITH CLIPSLOT, W/O CPA	33472-1376	A-BLK-CLIP	GC	PLR		M	R						6						12	SALEABLE			
KEY A, BLACK, WITH CLIPSLOT, W/O CPA	33472-1377	A-BLK-CLIP	GC	PLR		M	R	1	2			5	6	7	8			11	12	SALEABLE			
KEY A, BLACK, WITH CLIPSLOT, W/O CPA	33472-1378	A-BLK-CLIP	GC	PLR		M	R									9				SALEABLE			
KEY A, BLACK, WITH CLIPSLOT, W/O CPA	33472-1379	A-BLK-CLIP	GC	PLR		M	R			3	4					9	10	11	12	SALEABLE			
KEY A, BLACK, WITH CLIPSLOT, W/O CPA	33472-1380	A-BLK-CLIP	GC	PLR		M	R	1	2	3	4	5	6	7	8	9			12	SALEABLE			
KEY A, BLACK, WITH CLIPSLOT, W/O CPA	33472-1381	A-BLK-CLIP	GC	PLR		M	R	1	2			5	6	7	8					SALEABLE			
KEY A, BLACK, WITH CLIPSLOT, W/O CPA	33472-1382	A-BLK-CLIP	GC	PLR		M	R				4				8		10			SALEABLE			
KEY A, BLACK, WITH CLIPSLOT, W/O CPA	33472-1383	A-BLK-CLIP	GC	PLR		M	R	1	2	3	4	5	6			9	10	11	12	SALEABLE			
KEY A, BLACK, WITH CLIPSLOT, W/O CPA	33472-1384	A-BLK-CLIP	GC	PLR		M	R	1			4						11			SALEABLE			
KEY A, BLACK, WITH CLIPSLOT, W/O CPA	33472-1385	A-BLK-CLIP	GC	PLR		M	R									9	10	11	12	SALEABLE			
KEY A, BLACK, WITH CLIPSLOT, W/O CPA	33472-1386	A-BLK-CLIP	GC	PLR		M	R	1	2	3	4	5	6	7	8				12	SALEABLE			
KEY A, BLACK, WITH CLIPSLOT, W/O CPA	33472-1387	A-BLK-CLIP	GC	PLR		M	R	1	2				6	7	8				12	SALEABLE			
KEY A, BLACK, WITH CLIPSLOT, W/O CPA	33472-1388	A-BLK-CLIP	GC	PLR		M	R	1	2					7	8					SALEABLE			
KEY A, BLACK, WITH CLIPSLOT, W/O CPA	33472-1389	A-BLK-CLIP	GC	PLR		M	R	1					6	7	8				12	SALEABLE			
KEY A, BLACK, WITH CLIPSLOT, W/O CPA	33472-1390	A-BLK-CLIP	GC	PLR		M	R							7	8				12	SALEABLE			
KEY A, BLACK, WITH CLIPSLOT, W/O CPA	33472-1391	A-BLK-CLIP	GC	PLR		M	R		2		4			7	8	9	10			SALEABLE			
KEY A, BLACK, WITH CLIPSLOT, W/O CPA	33472-1392	A-BLK-CLIP	GC	PLR		M	R			3		5	6	7	8	9	10	11	12	SALEABLE			
KEY A, BLACK, WITH CLIPSLOT, W/O CPA	33472-1393	A-BLK-CLIP	GC	PLR		M	R			3				7		9	10	11	12	SALEABLE			
KEY A, BLACK, WITH CLIPSLOT, W/O CPA	33472-1394	A-BLK-CLIP	GC	PLR		M	R										10	11	12	SALEABLE			
KEY A, BLACK, WITH CLIPSLOT, W/O CPA	33472-1395	A-BLK-CLIP	GC	PLR		M	R	1	2	3	4		6	7	8	9	10		12	SALEABLE			
KEY A, BLACK, WITH CLIPSLOT, W/O CPA	33472-1396	A-BLK-CLIP	GC	PLR		M	R	1	2	3	4			7	8	9	10			SALEABLE			
KEY A, BLACK, WITH CLIPSLOT, W/O CPA	33472-1397	A-BLK-CLIP	GC	PLR		M	R						6		8	9	10	11	12	SALEABLE			
KEY B, LIGHT GRAY, WITH CLIPSLOT, W/O CPA	33472-1398	B-LG-CLIP	GC	PLR		M	R										10	11	12	SALEABLE			
KEY B, LIGHT GRAY, WITH CLIPSLOT, W/O CPA	33472-1399	B-LG-CLIP	GC	PLR		M	R						6	7			10	11	12	SALEABLE			
KEY B, LIGHT GRAY, WITH CLIPSLOT, W/O CPA	33472-1400	B-LG-CLIP	GC	PLR		M	R	1	2	3	4	5	6	7			10	11	12	SALEABLE			
KEY B, LIGHT GRAY, WITH CLIPSLOT, W/O CPA	33472-1401	B-LG-CLIP	GC	PLR		M	R	1	2	3	4	5	6			9	10	11	12	SALEABLE			
KEY B, LIGHT GRAY, WITH CLIPSLOT, W/O CPA	33472-1402	B-LG-CLIP	GC	PLR		M	R											11	12	SALEABLE			
KEY B, LIGHT GRAY, WITH CLIPSLOT, W/O CPA	33472-1403	B-LG-CLIP	GC	PLR		M	R					5	6			9	10	11	12	SALEABLE			
KEY B, LIGHT GRAY, WITH CLIPSLOT, W/O CPA	33472-1404	B-LG-CLIP	GC	PLR		M	R					5	6			9	10			SALEABLE			
KEY A, BLACK, WITH CLIPSLOT, W/O CPA	33472-1405	A-BLK-CLIP	GC	PLR		M	R								8	9	10	11	12	SALEABLE			
KEY A, BLACK, WITH CLIPSLOT, W/O CPA	33472-1406	A-BLK-CLIP	GC	PLR		M	R								8	9		11		SALEABLE			
KEY C, DARK GRAY, WITH CLIPSLOT, W/O CPA	33472-1407	C-DG-CLIP	GC	PLR		M	R													SALEABLE			
KEY D, STONE GRAY, WITH CLIPSLOT, W/O CPA	33472-1408	D-SG-CLIP	GC	PLR		M	R													SALEABLE			
KEY C, DARK GRAY, WITH CLIPSLOT, W/CPA	33472-1409	C-DG-CLIP	GC	PLR	CPA	M	R													SALEABLE			
KEY D, STONE GRAY, WITH CLIPSLOT, W/CPA	33472-1410	D-SG-CLIP	GC	PLR	CPA	M	R													SALEABLE			
KEY C, DARK GRAY, WITH CLIPSLOT, W/O CPA	33472-1411	C-DG-CLIP	GC	PLR		M	R	1	2	3	4	5	6	7	8	9	10	11	12	SALEABLE			
KEY D, STONE GRAY, WITH CLIPSLOT, W/O CPA	33472-1412	D-SG-CLIP	GC	PLR		M	R	1	2	3	4	5	6	7	8	9	10	11	12	SALEABLE			
KEY C, DARK GRAY, WITH CLIPSLOT, W/CPA	33472-1413	C-DG-CLIP	GC	PLR	CPA	M	R	1	2	3	4	5	6	7	8	9	10	11	12	SALEABLE			
KEY D, STONE GRAY, WITH CLIPSLOT, W/CPA	33472-1414	D-SG-CLIP	GC	PLR	CPA	M	R	1	2	3	4	5	6	7	8	9	10	11	12	SALEABLE			
KEY A, BLACK, WITH CLIPSLOT, W/O CPA	33472-1415	A-BLK-CLIP	GC	PLR		M	R	1	2	3					8		10	11	12	SALEABLE			
KEY A, BLACK, WITH CLIPSLOT, W/O CPA	33472-1416	A-BLK-CLIP	GC	PLR		M	R			3		5	6		8	9	10	11	12	SALEABLE			
KEY A, BLACK, WITH CLIPSLOT, W/O CPA	33472-1417	A-BLK-CLIP	GC	PLR		M	R		2	3			6	7	8	9	10	11	12	SALEABLE			
KEY A, BLACK, WITH CLIPSLOT, W/O CPA	33472-1418	A-BLK-CLIP	GC	PLR		M	R			3	4	5	6		8	9	10	11		SALEABLE			
KEY A, BLACK, WITH CLIPSLOT, W/O CPA	33472-1419	A-BLK-CLIP	GC	PLR		M	R								8	9				SALEABLE			
KEY A, BLACK, WITH CLIPSLOT, W/O CPA	33472-1420	A-BLK-CLIP	GC	PLR		M	R			3	4	5	6	7	8	9	10	11	12	SALEABLE			
KEY A, BLACK, WITH CLIPSLOT, W/O CPA	33472-1421	A-BLK-CLIP	GC	PLR		M	R	1	2											SALEABLE			
KEY A, BLACK, WITH CLIPSLOT, W/O CPA	33472-1422	A-BLK-CLIP	GC	PLR		M	R	1	2	3	4	5	6	7	8					SALEABLE			
KEY A, BLACK, WITH CLIPSLOT, W/O CPA	33472-1423	A-BLK-CLIP	GC	PLR		M	R	1	2	3	4	5	6	7	8	9				SALEABLE			
KEY A, BLACK, WITH CLIPSLOT, W/O CPA	33472-1424	A-BLK-CLIP	GC	PLR		M	R	1	2	3			6	7	8		10	11	12	SALEABLE			
KEY A, BLACK, WITH CLIPSLOT, W/O CPA	33472-1425	A-BLK-CLIP	GC	PLR		M	R				4						10			SALEABLE			
KEY A, BLACK, WITH CLIPSLOT, W/O CPA	33472-1426	A-BLK-CLIP	GC	PLR		M	R	1							8		10	11		SALEABLE			
KEY A, BLACK, WITH CLIPSLOT, W/O CPA	33472-1427	A-BLK-CLIP	GC	PLR		M	R	1	2			5	6							NOT RECOMMENDED	SEE P/N 33472-1433		
KEY A, BLACK, WITH CLIPSLOT, W/O CPA	33472-1428	A-BLK-CLIP	GC	PLR		M	R			3	4									NOT RECOMMENDED	SEE P/N 33472-1434		
KEY A, BLACK, WITH CLIPSLOT, W/O CPA	33472-1429	A-BLK-CLIP	GC	PLR		M	R	1	2	3	4									NOT RECOMMENDED	SEE P/N 33472-1435		
KEY A, BLACK, WITH CLIPSLOT, W/O CPA	33472-1430	A-BLK-CLIP	GC	PLR		M	R	1	2	3	4	5	6							NOT RECOMMENDED	SEE P/N 33472-1436		
KEY A, BLACK, WITH CLIPSLOT, W/CPA	33472-1431	A-BLK-CLIP	GC	PLR	CPA	M	R							7	8					SALEABLE			
KEY A, BLACK, WITH CLIPSLOT, W/O CPA	33472-1432	A-BLK-CLIP	GC	PLR		M	R			3	4	5	6			9	10	11		SALEABLE			
KEY C, DARK GRAY, WITH CLIPSLOT, W/O CPA	33472-1433	C-DG-CLIP	GC	PLR		M	R	1	2			5	6							SALEABLE			
KEY C, DARK GRAY, WITH CLIPSLOT, W/O CPA	33472-1434	C-DG-CLIP	GC	PLR		M	R			3	4									SALEABLE			
KEY C, DARK GRAY, WITH CLIPSLOT, W/O CPA	33472-1435	C-DG-CLIP	GC	PLR		M	R	1	2	3	4									SALEABLE			
KEY C, DARK GRAY, WITH CLIPSLOT, W/O CPA	33472-1436	C-DG-CLIP	GC	PLR		M	R	1	2	3	4	5	6							SALEABLE			
KEY A, BLACK, WITH CLIPSLOT, W/O CPA	33472-1437	A-BLK-CLIP	GC	PLR		M	R								8	9	10		12	SALEABLE			
KEY A, BLACK, WITH CLIPSLOT, W/O CPA	33472-1438	A-BLK-CLIP	GC	PLR		M	R	1	2		4			7	8		10		12	SALEABLE			
KEY A, BLACK, WITH CLIPSLOT, W/O CPA	33472-1439	A-BLK-CLIP	GC	PLR		M	R		2	3		5						11		SALEABLE			
KEY A, BLACK, WITH CLIPSLOT, W/O CPA	33472-1440	A-BLK-CLIP	GC	PLR		M	R	1	2	3						9		11		SALEABLE			
KEY A, BLACK, WITH CLIPSLOT, W/O CPA	33472-1441	A-BLK-CLIP	GC	PLR		M	R	1	2	3		5				9		11		SALEABLE			
KEY A, BLACK, WITH CLIPSLOT, W/O CPA	33472-1442	A-BLK-CLIP	GC	PLR		M	R	1	2	3	4	5		7	8					SALEABLE			

molex

MX150 RECEPTACLE 2X6 SEALED ASSEMBLY MAT SEAL
BOM AND PIN OUT SHEET

ASSEMBLY DESCRIPTION	ASSEMBLY PART NUMBER	COMPONENT						BLOCKED TERMINALS												STATUS	COMMENTS	OPTIONAL ATTATCHMENTS SOLD SEPERATELY	
		THE PRESENCE OF AN ABBREVIATION INDICATES THE PRESENCE OF THAT COMPONENT.						CAVITY WITH A NUMBER INDICATES BLOCKED TERMINAL POSITION CAVITY WITHOUT A NUMBER INDICATES OPEN TERMINAL POSITION															
		HOUSING KEY/COLOR	GROMMET CAP	PLR	CPA	MAT SEAL	RING SEAL	1	2	3	4	5	6	7	8	9	10	11	12			BACKSHELL WITH RIBS	BACKSHELL WITHOUT RIBS
KEY A, BLACK, WITH CLIPSLOT, W/O CPA	33472-1443	A-BLK-CLIP	GC	PLR		M	R					5			8					SALEABLE			
KEY A, BLACK, WITH CLIPSLOT, W/O CPA	33472-1444	A-BLK-CLIP	GC	PLR		M	R		2			5				9				SALEABLE			
KEY A, BLACK, WITH CLIPSLOT, W/O CPA	33472-1445	A-BLK-CLIP	GC	PLR		M	R		2			5		7		9			12	SALEABLE			
KEY A, BLACK, WITH CLIPSLOT, W/O CPA	33472-1446	A-BLK-CLIP	GC	PLR		M	R		2							9				SALEABLE			
KEY A, BLACK, WITH CLIPSLOT, W/O CPA	33472-1447	A-BLK-CLIP	GC	PLR		M	R	1	2	3	4		6					11	12	SALEABLE			
KEY B, LIGHT GRAY, WITH CLIPSLOT, W/O CPA	33472-1448	B-LG-CLIP	GC	PLR		M	R	1	2	3	4	5			8	9	10	11	12	SALEABLE			
KEY B, LIGHT GRAY, WITH CLIPSLOT, W/O CPA	33472-1449	B-LG-CLIP	GC	PLR		M	R					5			8					SALEABLE			
KEY B, LIGHT GRAY, WITH CLIPSLOT, W/O CPA	33472-1450	B-LG-CLIP	GC	PLR		M	R					5			8	9	10	11	12	SALEABLE			
KEY B, LIGHT GRAY, WITH CLIPSLOT, W/O CPA	33472-1451	B-LG-CLIP	GC	PLR		M	R					5			8			11	12	SALEABLE			
KEY A, BLACK, WITH CLIPSLOT, W/CPA	33472-1452	A-BLK-CLIP	GC	PLR	CPA	M	R											11	12	SALEABLE			
KEY A, BLACK, WITH CLIPSLOT, W/O CPA	33472-1453	A-BLK-CLIP	GC	PLR		M	R		2						8					SALEABLE			
KEY A, BLACK, WITH CLIPSLOT, W/O CPA	33472-1456	A-BLK-CLIP	GC	PLR		M	R		2		4				8		10			SALEABLE			
KEY A, BLACK, WITH CLIPSLOT, W/O CPA	33472-1457	A-BLK-CLIP	GC	PLR		M	R	1	2	3	4	5	6		8		10	11	12	SALEABLE			
KEY A, BLACK, WITH CLIPSLOT, W/O CPA	33472-1458	A-BLK-CLIP	GC	PLR		M	R	1		3		5	6		8	9	10	11	12	SALEABLE			
KEY A, BLACK, WITH CLIPSLOT, W/O CPA	33472-1459	A-BLK-CLIP	GC	PLR		M	R				4	5	6	7	8	9	10	11	12	SALEABLE			
KEY A, BLACK, WITH CLIPSLOT, W/O CPA	33472-1460	A-BLK-CLIP	GC	PLR		M	R				4			7	8	9	10	11	12	SALEABLE			
KEY A, BLACK, WITH CLIPSLOT, W/O CPA	33472-1461	A-BLK-CLIP	GC	PLR		M	R	1	2	3	4	5	6		8	9	10	11	12	SALEABLE			
KEY A, BLACK, W/O CPA	33472-1462	A-BLK	GC	PLR		M	R				4					9	10	11	12	SALEABLE			
KEY A, BLACK, W/O CPA	33472-1463	A-BLK	GC	PLR		M	R												12	SALEABLE			
KEY A, BLACK, W/O CPA	33472-1464	A-BLK	GC	PLR		M	R	1	2	3	4	5	6	7	8	9	10			SALEABLE			
KEY A, BLACK, W/CPA	33472-1465	A-BLK	GC	PLR	CPA	M	R					5				9		11	12	SALEABLE			
KEY A, BLACK, W/CPA	33472-1466	A-BLK	GC	PLR	CPA	M	R	1	2	3										SALEABLE			
KEY A, BLACK, W/CPA	33472-1467	A-BLK	GC	PLR	CPA	M	R	1	2				6	7				11	12	SALEABLE			
KEY A, BLACK, W/CPA	33472-1468	A-BLK	GC	PLR	CPA	M	R						6	7	8	9	10	11	12	SALEABLE			
KEY A, BLACK, WITH CLIPSLOT, W/O CPA	33472-1469	A-BLK-CLIP	GC	PLR		M	R					5	6	7			10		12	SALEABLE			
KEY A, BLACK, WITH CLIPSLOT, W/O CPA	33472-1470	A-BLK-CLIP	GC	PLR		M	R	1	2		4	5	6	7					12	SALEABLE			
KEY B, LIGHT GRAY, W/CPA	33472-1471	B-LG	GC	PLR	CPA	M	R					5								SALEABLE			
KEY A, BLACK, WITH CLIPSLOT, W/O CPA	33472-1472	A-BLK-CLIP	GC	PLR		M	R							7	8			11		SALEABLE			
KEY A, BLACK, WITH CLIPSLOT, W/O CPA	33472-1473	A-BLK-CLIP	GC	PLR		M	R	1	2	3	4			7	8	9	10	11		SALEABLE			
KEY A, BLACK, WITH CLIPSLOT, W/O CPA	33472-1474	A-BLK-CLIP	GC	PLR		M	R					5	6	7		9	10		12	SALEABLE			
KEY A, BLACK, W/CPA	33472-1475	A-BLK	GC	PLR	CPA	M	R		2	3	4					9				SALEABLE			
KEY A, BLACK, W/CPA	33472-1476	A-BLK	GC	PLR	CPA	M	R		2	3	4					9	10	11		SALEABLE			
KEY A, BLACK, WITH CLIPSLOT, W/O CPA	33472-1477	A-BLK-CLIP	GC	PLR		M	R					5								SALEABLE			
KEY A, BLACK, WITH CLIPSLOT, W/O CPA	33472-1478	A-BLK-CLIP	GC	PLR		M	R			3	4		6							SALEABLE			
KEY A, BLACK, WITH CLIPSLOT, W/O CPA	33472-1479	A-BLK-CLIP	GC	PLR		M	R						6							SALEABLE			
KEY A, BLACK, WITH CLIPSLOT, W/O CPA	33472-1480	A-BLK-CLIP	GC	PLR		M	R	1	2		4	5	6	7		9	10	11	12	SALEABLE			
KEY A, BLACK, WITH CLIPSLOT, W/O CPA	33472-1481	A-BLK-CLIP	GC	PLR		M	R					5			8	9				SALEABLE			
KEY A, BLACK, WITH CLIPSLOT, W/O CPA	33472-1482	A-BLK-CLIP	GC	PLR		M	R					5		7	8	9				SALEABLE			
KEY A, BLACK, W/CPA	33472-1483	A-BLK	GC	PLR	CPA	M	R				4									SALEABLE			
KEY A, BLACK, W/O CPA	33472-1484	A-BLK	GC	PLR		M	R							7	8	9	10	11	12	SALEABLE			
KEY A, BLACK, W/O CPA	33472-1485	A-BLK	GC	PLR		M	R				4	5				9	10	11	12	SALEABLE			
KEY A, BLACK, W/CPA	33472-1486	A-BLK	GC	PLR	CPA	M	R	1		3		5			8		10		12	SALEABLE			
KEY A, BLACK, W/CPA	33472-1487	A-BLK	GC	PLR	CPA	M	R		2		4		6	7		9		11		SALEABLE			
KEY A, BLACK, WITH CLIPSLOT, W/O CPA	33472-1488	A-BLK-CLIP	GC	PLR		M	R			3			6	7	8	9	10	11	12	SALEABLE			
KEY A, BLACK, WITH CLIPSLOT, W/O CPA	33472-1489	A-BLK-CLIP	GC	PLR		M	R			3				7	8	9				SALEABLE			
KEY A, BLACK, WITH CLIPSLOT, W/O CPA	33472-1490	A-BLK-CLIP	GC	PLR		M	R			3			6			9	10	11	12	SALEABLE			
KEY A, BLACK, WITH CLIPSLOT, W/O CPA	33472-1491	A-BLK-CLIP	GC	PLR		M	R						6	7	8		10	11	12	SALEABLE			
KEY A, BLACK, WITH CLIPSLOT, W/O CPA	33472-1492	A-BLK-CLIP	GC	PLR		M	R						6				10	11	12	SALEABLE			
KEY A, BLACK, WITH CLIPSLOT, W/O CPA	33472-1493	A-BLK-CLIP	GC	PLR		M	R			3						9				SALEABLE			
KEY A, BLACK, WITH CLIPSLOT, W/O CPA	33472-1494	A-BLK-CLIP	GC	PLR		M	R					5	6	7			10	11		SALEABLE			
KEY A, BLACK, WITH CLIPSLOT, W/O CPA	33472-1495	A-BLK-CLIP	GC	PLR		M	R		2				6				10	11		SALEABLE			
KEY A, BLACK, WITH CLIPSLOT, W/O CPA	33472-1496	A-BLK-CLIP	GC	PLR		M	R		2				6		8			11		SALEABLE			
KEY A, BLACK, WITH CLIPSLOT, W/O CPA	33472-1497	A-BLK-CLIP	GC	PLR		M	R	1					6	7					12	SALEABLE			
KEY A, BLACK, WITH CLIPSLOT, W/O CPA	33472-1498	A-BLK-CLIP	GC	PLR		M	R	1		3	4	5	6		8		10	11	12	SALEABLE			
KEY A, BLACK, WITH CLIPSLOT, W/O CPA	33472-1499	A-BLK-CLIP	GC	PLR		M	R	1		3		5						11	12	SALEABLE			
KEY A, BLACK, WITH CLIPSLOT, W/O CPA	33472-1500	A-BLK-CLIP	GC	PLR		M	R				4	5	6		8		10	11		SALEABLE			
KEY A, BLACK, WITH CLIPSLOT, W/O CPA	33472-1501	A-BLK-CLIP	GC	PLR		M	R	1		3		5			8		10	11	12	SALEABLE			
KEY A, BLACK, WITH CLIPSLOT, W/O CPA	33472-1502	A-BLK-CLIP	GC	PLR		M	R				4	5	6		8		10			SALEABLE			
KEY A, BLACK, WITH CLIPSLOT, W/O CPA	33472-1503	A-BLK-CLIP	GC	PLR		M	R				4	5			8		10			SALEABLE			
KEY A, BLACK, WITH CLIPSLOT, W/O CPA	33472-1504	A-BLK-CLIP	GC	PLR		M	R	1	2	3	4		6				10	11	12	SALEABLE			
KEY A, BLACK, WITH CLIPSLOT, W/O CPA	33472-1505	A-BLK-CLIP	GC	PLR		M	R			3	4							11	12	SALEABLE			
KEY B, LIGHT GRAY, WITH CLIPSLOT, W/O CPA	33472-1506	B-LG-CLIP	GC	PLR		M	R	1						7				11		SALEABLE			
KEY B, LIGHT GRAY, WITH CLIPSLOT, W/O CPA	33472-1507	B-LG-CLIP	GC	PLR		M	R							7				11		SALEABLE			
KEY A, BLACK, WITH CLIPSLOT, W/O CPA	33472-1508	A-BLK-CLIP	GC	PLR		M	R	1					6	7	8	9				SALEABLE			
KEY A, BLACK, WITH CLIPSLOT, W/O CPA	33472-1509	A-BLK-CLIP	GC	PLR		M	R				4		6		8					SALEABLE			
KEY A, BLACK, WITH CLIPSLOT, W/O CPA	33472-1510	A-BLK-CLIP	GC	PLR		M	R		2		4				8	9	10			SALEABLE			
KEY A, BLACK, WITH CLIPSLOT, W/O CPA	33472-1511	A-BLK-CLIP	GC	PLR		M	R									9	10			SALEABLE			
KEY A, BLACK, WITH CLIPSLOT, W/O CPA	33472-1512	A-BLK-CLIP	GC	PLR		M	R		2	3	4				8	9		11		SALEABLE			
KEY A, BLACK, WITH CLIPSLOT, W/O CPA	33472-1513	A-BLK-CLIP	GC	PLR		M	R					5					10	11		SALEABLE			
KEY A, BLACK, WITH CLIPSLOT, W/O CPA	33472-1514	A-BLK-CLIP	GC	PLR		M	R				4	5		7				11	12	SALEABLE			
KEY A, BLACK, WITH CLIPSLOT, W/O CPA	33472-1515	A-BLK-CLIP	GC	PLR		M	R	1	2	3	4		6	7	8	9	10	11		SALEABLE			
KEY A, BLACK, WITH CLIPSLOT, W/O CPA	33472-1516	A-BLK-CLIP	GC	PLR		M	R				4		6		8		10	11		SALEABLE			
KEY A, BLACK, WITH CLIPSLOT, W/O CPA	33472-1517	A-BLK-CLIP	GC	PLR		M	R	1	2	3	4	5	6		8	9				SALEABLE			
KEY A, BLACK, WITH CLIPSLOT, W/O CPA	33472-1518	A-BLK-CLIP	GC	PLR		M	R		2		4		6		8					SALEABLE			
KEY A, BLACK, WITH CLIPSLOT, W/O CPA	33472-1519	A-BLK-CLIP	GC	PLR		M	R	1		3	4							11	12	SALEABLE			
KEY A, BLACK, WITH CLIPSLOT, W/O CPA	33472-1520	A-BLK-CLIP	GC	PLR		M	R	1		3	4							11		SALEABLE			
KEY A, BLACK, WITH CLIPSLOT, W/O CPA	33472-1521	A-BLK-CLIP	GC	PLR		M	R		2						8	9	10	11	12	SALEABLE			
KEY A, BLACK, WITH CLIPSLOT, W/O CPA	33472-1522	A-BLK-CLIP	GC	PLR		M	R							7	8	9	10			SALEABLE			
KEY A, BLACK, WITH CLIPSLOT, W/O CPA	33472-1523	A-BLK-CLIP	GC	PLR		M	R							7	8	9	10		12	SALEABLE			
KEY A, BLACK, W/O CPA	33472-1524	A-BLK	GC	PLR		M	R		2	3		5	6	7		9	10	11	12	SALEABLE			
KEY A, BLACK, W/O CPA	33472-1525	A-BLK	GC	PLR		M	R	1	2	3	4				8	9				SALEABLE			
KEY A, BLACK, W/O CPA	33472-1526	A-BLK	GC	PLR		M	R		2	3						9				SALEABLE			
KEY A, BLACK, W/O CPA	33472-1527	A-BLK	GC	PLR		M	R								8		10	11		SALEABLE			
KEY A, BLACK, WITH CLIPSLOT, W/O CPA	33472-1528	A-BLK-CLIP	GC	PLR		M	R	1		3		5						11		SALEABLE			
KEY A, BLACK, W/O CPA	33472-1529	A-BLK	GC	PLR		M	R	1		3		5			8		10	11		SALEABLE			
KEY A, BLACK, WITH CLIPSLOT, W/O CPA	33472-1530	A-BLK-CLIP	GC	PLR		M	R		2					7	8					SALEABLE			
KEY A, BLACK, WITH CLIPSLOT, W/O CPA	33472-1531	A-BLK-CLIP	GC	PLR		M	R	1			4			7				11		SALEABLE			
KEY A, BLACK, WITH CLIPSLOT, W/O CPA	33472-1532	A-BLK-CLIP	GC	PLR		M	R		2	3		5	6	7		9	10	11	12	SALEABLE			
KEY A, BLACK, WITH CLIPSLOT, W/O CPA	33472-1533	A-BLK-CLIP	GC	PLR		M	R	1	2	3	4				8	9				SALEABLE			

molex

MX150 RECEPTACLE 2X6 SEALED ASSEMBLY MAT SEAL
BOM AND PIN OUT SHEET

ASSEMBLY DESCRIPTION	ASSEMBLY PART NUMBER	COMPONENT						BLOCKED TERMINALS												STATUS	COMMENTS	OPTIONAL ATTATCHMENTS SOLD SEPERATELY	
		THE PRESENCE OF AN ABBREVIATION INDICATES THE PRESENCE OF THAT COMPONENT.						CAVITY WITH A NUMBER INDICATES BLOCKED TERMINAL POSITION CAVITY WITHOUT A NUMBER INDICATES OPEN TERMINAL POSITION															
		HOUSING KEY/COLOR	GROMMET CAP	PLR	CPA	MAT SEAL	RING SEAL	1	2	3	4	5	6	7	8	9	10	11	12			BACKSHELL WITH RIBS	BACKSHELL WITHOUT RIBS
KEY A, BLACK, WITH CLIPSLOT, W/O CPA	33472-1534	A-BLK-CLIP	GC	PLR		M	R		2	3						9				SALEABLE			
KEY A, BLACK, WITH CLIPSLOT, W/O CPA	33472-1535	A-BLK-CLIP	GC	PLR		M	R								8		10	11		SALEABLE			
KEY A, BLACK, WITH CLIPSLOT, W/O CPA	33472-1536	A-BLK-CLIP	GC	PLR		M	R	1		3		5			8		10	11		SALEABLE			
KEY A, BLACK, W/O CPA	33472-1537	A-BLK	GC	PLR		M	R	1					6	7	8	9	10			SALEABLE			
KEY A, BLACK, WITH CLIPSLOT, W/O CPA	33472-1538	A-BLK-CLIP	GC	PLR		M	R							7		9	10			SALEABLE			
KEY B, LIGHT GRAY, W/O CPA	33472-1539	B-LG	GC	PLR		M	R							7	8	9			12	SALEABLE			
KEY A, BLACK, WITH CLIPSLOT, W/O CPA	33472-1540	A-BLK-CLIP	GC	PLR		M	R	1					6	7	8	9	10			SALEABLE			
KEY A, BLACK, WITH CLIPSLOT, W/O CPA	33472-1541	A-BLK-CLIP	GC	PLR		M	R	1			4		6	7	8	9	10	11		SALEABLE			
KEY A, BLACK, WITH CLIPSLOT, W/O CPA	33472-1542	A-BLK-CLIP	GC	PLR		M	R	1	2	3		5	6	7	8	9	10		12	SALEABLE			
KEY A, BLACK, WITH CLIPSLOT, W/O CPA	33472-1543	A-BLK-CLIP	GC	PLR		M	R		2		4		6	7	8	9	10	11	12	SALEABLE			
KEY A, BLACK, WITH CLIPSLOT, W/O CPA	33472-1544	A-BLK-CLIP	GC	PLR		M	R			3	4					9	10	11	12	SALEABLE			
KEY A, BLACK, WITH CLIPSLOT, W/O CPA	33472-1545	A-BLK-CLIP	GC	PLR		M	R			3	4							11	12	SALEABLE			
KEY A, BLACK, WITH CLIPSLOT, W/O CPA	33472-1546	A-BLK-CLIP	GC	PLR		M	R	1	2			5	6	7	8	9	10			SALEABLE			
KEY A, BLACK, WITH CLIPSLOT, W/O CPA	33472-1547	A-BLK-CLIP	GC	PLR		M	R									9	10			SALEABLE			
KEY A, BLACK, W/CPA	33472-1548	A-BLK	GC	PLR	CPA	M	R					5								SALEABLE			
KEY A, BLACK, W/CPA	33472-1549	A-BLK	GC	PLR	CPA	M	R						6						12	SALEABLE			
KEY A, BLACK, WITH CLIPSLOT, W/O CPA	33472-1550	A-BLK-CLIP	GC	PLR		M	R										10	11	12	SALEABLE			
KEY A, BLACK, WITH CLIPSLOT, W/O CPA	33472-1551	A-BLK-CLIP	GC	PLR		M	R									9				SALEABLE			
KEY A, BLACK, WITH CLIPSLOT, W/O CPA	33472-1552	A-BLK-CLIP	GC	PLR		M	R		2						8	9	10	11	12	SALEABLE			
KEY A, BLACK, WITH CLIPSLOT, W/O CPA	33472-1553	A-BLK-CLIP	GC	PLR		M	R		2						8	9				SALEABLE			
KEY A, BLACK, W/O CPA	33472-1554	A-BLK	GC	PLR		M	R							7	8	9	10	11	12	SALEABLE	SEE P/N 33472-1484		
KEY A, BLACK, W/CPA	33472-1555	A-BLK	GC	PLR	CPA	M	R							7	8	9	10	11	12	SALEABLE			
KEY A, BLACK, WITH CLIPSLOT, W/O CPA	33472-1556	A-BLK-CLIP	GC	PLR		M	R					5					10	11		SALEABLE			
KEY A, BLACK, WITH CLIPSLOT, W/O CPA	33472-1557	A-BLK-CLIP	GC	PLR		M	R	1			4	5			8		10		12	SALEABLE			

molex

MX150 RECEPTACLE 2X8 SEALED ASSEMBLY MAT SEAL
BOM AND PIN OUT SHEET

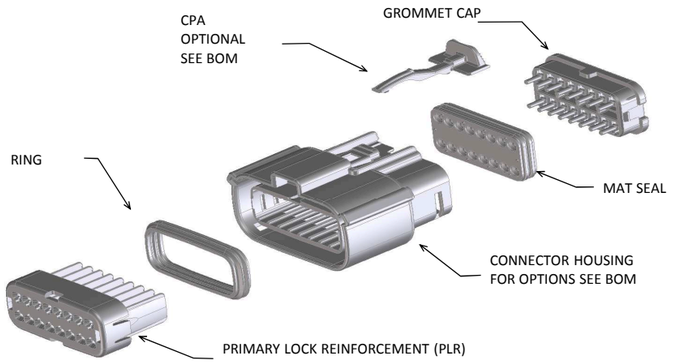

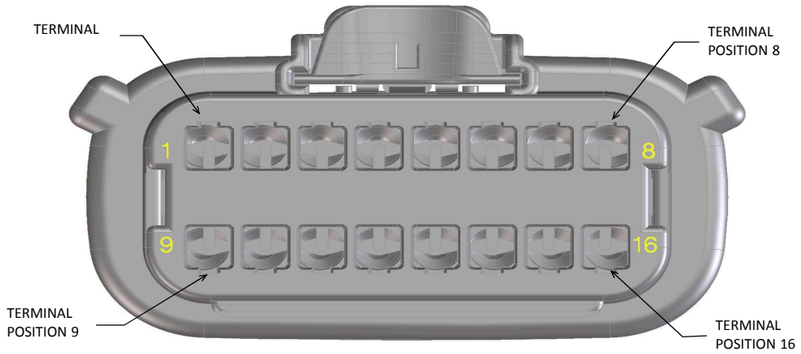

ABBREVIATION	DESCRIPTION	COLOR	MATERIAL
A-BLK	HOUSING, KEYING OPTION A	BLACK	SPS/NYLON GF20
B-LG	HOUSING, KEYING OPTION B	LIGHT GRAY	SPS/NYLON GF20
C-BR	HOUSING, KEYING OPTION C	BROWN	SPS/NYLON GF20
D-GR	HOUSING, KEYING OPTION D	GREEN	SPS/NYLON GF20
C-DG	HOUSING, KEYING OPTION C	DARK GRAY	SPS/NYLON GF20
D-SG	HOUSING, KEYING OPTION D	STONE GRAY	SPS/NYLON GF20
A-YW	HOUSING, KEYING OPTION A	YELLOW	SPS/NYLON GF20
A-BLK-CLIP	HOUSING, KEYING OPTION A WITH CLIPSLOT	BLACK	SPS/NYLON GF20
B-LG-CLIP	HOUSING, KEYING OPTION B WITH CLIPSLOT	LIGHT GRAY	SPS/NYLON GF20
C-DG-CLIP	HOUSING, KEYING OPTION C WITH CLIPSLOT	DARK GRAY	SPS/NYLON GF20
D-SG-CLIP	HOUSING, KEYING OPTION D WITH CLIPSLOT	STONE GRAY	SPS/NYLON GF20
GC	GROMMET CAP	BLACK	SPS/NYLON GF20
PLR	PLR	NATURAL	SPS/NYLON GF20
CPA	CPA	RED	PBT GF30
M	MAT SEAL	LIGHT BLUE	INHERENTLY LUBRICATED SILICONE
R	RING SEAL	GREEN	INHERENTLY LUBRICATED SILICONE

FOR ADDITIONAL INFORMATION SEE SD-33472-0001

ASSEMBLY DESCRIPTION	ASSEMBLY PART NUMBER	COMPONENT						BLOCKED TERMINALS																STATUS	COMMENTS	OPTIONAL ATTATCHMENTS SOLD SEPERATELY	
		THE PRESENCE OF AN ABBREVIATION INDICATES THE PRESENCE OF THAT COMPONENT.						CAVITY WITH A NUMBER INDICATES BLOCKED TERMINAL POSITION CAVITY WITHOUT A NUMBER INDICATES OPEN TERMINAL POSITION																			
		HOUSING KEY/COLOR	GROMMET CAP	PLR	CPA	MAT SEAL	RING SEAL	1	2	3	4	5	6	7	8	9	10	11	12	13	14	15	16			BACKSHELL WITH RIBS	BACKSHELL WITHOUT RIBS
KEY A, BLACK, W/O CPA	33472-1601	A-BLK	GC	PLR		M	R																	SALEABLE			
KEY B, LIGHT GRAY, W/O CPA	33472-1602	B-LG	GC	PLR		M	R																	SALEABLE			
KEY C, BROWN, W/O CPA	33472-1603	C-BR	GC	PLR		M	R																	NOT RECOMMENDED	SEE P/N 33472-1767		
KEY D, GREEN, W/O CPA	33472-1604	D-GR	GC	PLR		M	R																	NOT RECOMMENDED	SEE P/N 33472-1768		
VOID KEY	33472-1605																										
KEY A, BLACK, W/CPA	33472-1606	A-BLK	GC	PLR	CPA	M	R																	SALEABLE			
KEY B, LIGHT GRAY, W/CPA	33472-1607	B-LG	GC	PLR	CPA	M	R																	SALEABLE			
KEY C, BROWN, W/CPA	33472-1608	C-BR	GC	PLR	CPA	M	R																	NOT RECOMMENDED	SEE P/N 33472-1769		
KEY D, GREEN, W/CPA	33472-1609	D-GR	GC	PLR	CPA	M	R																	NOT RECOMMENDED	SEE P/N 33472-1770		
VOID KEY	33472-1610																										
KEY A, BLACK, W/O CPA	33472-1611	A-BLK	GC	PLR		M	R								8									SALEABLE			
KEY B, LIGHT GRAY, W/O CPA	33472-1612	B-LG	GC	PLR		M	R								8									SALEABLE			
KEY C, BROWN, W/O CPA	33472-1613	C-BR	GC	PLR		M	R								8									NOT RECOMMENDED			
KEY D, GREEN, W/O CPA	33472-1614	D-GR	GC	PLR		M	R								8									NOT RECOMMENDED			
VOID KEY	33472-1615																										
KEY A, BLACK, W/CPA	33472-1616	A-BLK	GC	PLR	CPA	M	R								8									SALEABLE			
KEY B, LIGHT GRAY, W/CPA	33472-1617	B-LG	GC	PLR	CPA	M	R								8									SALEABLE			
KEY C, BROWN, W/CPA	33472-1618	C-BR	GC	PLR	CPA	M	R								8									NOT RECOMMENDED			
KEY D, GREEN, W/CPA	33472-1619	D-GR	GC	PLR	CPA	M	R								8									NOT RECOMMENDED			
VOID KEY	33472-1620																										
KEY A, BLACK, W/O CPA	33472-1621	A-BLK	GC	PLR		M	R	1	2	3	4	5	6	7	8	9	10	11	12	13	14	15	16	SALEABLE			
KEY B, LIGHT GRAY, W/O CPA	33472-1622	B-LG	GC	PLR		M	R	1	2	3	4	5	6	7	8	9	10	11	12	13	14	15	16	SALEABLE			
KEY C, BROWN, W/O CPA	33472-1623	C-BR	GC	PLR		M	R	1	2	3	4	5	6	7	8	9	10	11	12	13	14	15	16	NOT RECOMMENDED			
KEY D, GREEN, W/O CPA	33472-1624	D-GR	GC	PLR		M	R	1	2	3	4	5	6	7	8	9	10	11	12	13	14	15	16	NOT RECOMMENDED			
VOID KEY	33472-1625																										
KEY A, BLACK, W/CPA	33472-1626	A-BLK	GC	PLR	CPA	M	R	1	2	3	4	5	6	7	8	9	10	11	12	13	14	15	16	SALEABLE			
KEY B, LIGHT GRAY, W/CPA	33472-1627	B-LG	GC	PLR	CPA	M	R	1	2	3	4	5	6	7	8	9	10	11	12	13	14	15	16	SALEABLE			
KEY C, BROWN, W/CPA	33472-1628	C-BR	GC	PLR	CPA	M	R	1	2	3	4	5	6	7	8	9	10	11	12	13	14	15	16	NOT RECOMMENDED			
KEY D, GREEN, W/CPA	33472-1629	D-GR	GC	PLR	CPA	M	R	1	2	3	4	5	6	7	8	9	10	11	12	13	14	15	16	NOT RECOMMENDED			
VOID KEY	33472-1630																										
KEY A, BLACK, W/O CPA	33472-1631	A-BLK	GC	PLR		M	R								8	9								SALEABLE			
KEY B, LIGHT GRAY, W/O CPA	33472-1632	B-LG	GC	PLR		M	R								8	9								SALEABLE			
KEY C, BROWN, W/O CPA	33472-1633	C-BR	GC	PLR		M	R								8	9								NOT RECOMMENDED			
KEY D, GREEN, W/O CPA	33472-1634	D-GR	GC	PLR		M	R								8	9								NOT RECOMMENDED			
VOID KEY	33472-1635																										
KEY A, BLACK, W/CPA	33472-1636	A-BLK	GC	PLR	CPA	M	R								8	9								SALEABLE			
KEY B, LIGHT GRAY, W/CPA	33472-1637	B-LG	GC	PLR	CPA	M	R								8	9								SALEABLE			
KEY C, BROWN, W/CPA	33472-1638	C-BR	GC	PLR	CPA	M	R								8	9								NOT RECOMMENDED			
KEY D, GREEN, W/CPA	33472-1639	D-GR	GC	PLR	CPA	M	R								8	9								NOT RECOMMENDED			
VOID KEY	33472-1640																										
KEY A, BLACK, W/O CPA	33472-1641	A-BLK	GC	PLR		M	R	1							8	9								SALEABLE			
KEY B, LIGHT GRAY, W/O CPA	33472-1642	B-LG	GC	PLR		M	R	1							8	9								SALEABLE			
KEY C, BROWN, W/O CPA	33472-1643	C-BR	GC	PLR		M	R	1							8	9								NOT RECOMMENDED			
KEY D, GREEN, W/O CPA	33472-1644	D-GR	GC	PLR		M	R	1							8	9								NOT RECOMMENDED			
VOID KEY	33472-1645																										
KEY A, BLACK, W/CPA	33472-1646	A-BLK	GC	PLR	CPA	M	R	1							8	9								SALEABLE			
KEY B, LIGHT GRAY, W/CPA	33472-1647	B-LG	GC	PLR	CPA	M	R	1							8	9								SALEABLE			
KEY C, BROWN, W/CPA	33472-1648	C-BR	GC	PLR	CPA	M	R	1							8	9								NOT RECOMMENDED			
KEY D, GREEN, W/CPA	33472-1649	D-GR	GC	PLR	CPA	M	R	1							8	9								NOT RECOMMENDED			
VOID KEY	33472-1650																										
KEY A, BLACK, W/O CPA	33472-1651	A-BLK	GC	PLR		M	R															15		SALEABLE			
KEY A, BLACK, W/CPA	33472-1652	A-BLK	GC	PLR	CPA	M	R															15		SALEABLE			
KEY A, BLACK, W/O CPA	33472-1653	A-BLK	GC	PLR		M	R	1							8	9							16	SALEABLE			
KEY B, LIGHT GRAY, W/O CPA	33472-1654	B-LG	GC	PLR		M	R	1							8	9							16	SALEABLE			
KEY C, BROWN, W/O CPA	33472-1655	C-BR	GC	PLR		M	R	1							8	9							16	NOT RECOMMENDED			
KEY D, GREEN, W/O CPA	33472-1656	D-GR	GC	PLR		M	R	1							8	9							16	NOT RECOMMENDED			
VOID KEY	33472-1657																										
KEY A, BLACK, W/CPA	33472-1658	A-BLK	GC	PLR	CPA	M	R	1							8	9							16	SALEABLE			
KEY B, LIGHT GRAY, W/CPA	33472-1659	B-LG	GC	PLR	CPA	M	R	1							8	9							16	SALEABLE			
KEY C, BROWN, W/CPA	33472-1660	C-BR	GC	PLR	CPA	M	R	1							8	9							16	NOT RECOMMENDED			
KEY D, GREEN, W/CPA	33472-1661	D-GR	GC	PLR	CPA	M	R	1							8	9							16	NOT RECOMMENDED			
VOID KEY	33472-1662																										
KEY A, BLACK, W/O CPA	33472-1663	A-BLK	GC	PLR		M	R	1			4		6	7	8	9			12	13	14			SALEABLE			
KEY A, BLACK, W/O CPA	33472-1664	A-BLK	GC	PLR		M	R			3	4	5		7		9	10	11	12	13	14	15	16	SALEABLE			
KEY A, BLACK, W/O CPA	33472-1665	A-BLK	GC	PLR		M	R							7	8	9			12	13	14			SALEABLE			
KEY A, BLACK, W/O CPA	33472-1666	A-BLK	GC	PLR		M	R			3	4	5					10	11	12	13	14	15	16	SALEABLE			
KEY A, BLACK, W/O CPA	33472-1667	A-BLK	GC	PLR		M	R			3	4	5				9	10	11	12	13	14	15	16	SALEABLE			
KEY A, BLACK, W/O CPA	33472-1668	A-BLK	GC	PLR		M	R	1				5												SALEABLE			
KEY B, LIGHT GRAY, W/O CPA	33472-1669	B-LG	GC	PLR		M	R								8				12	13	14	15	16	SALEABLE			
KEY B, LIGHT GRAY, W/O CPA	33472-1670	B-LG	GC	PLR		M	R								8					13	14	15	16	SALEABLE			

molex

MX150 RECEPTACLE 2X8 SEALED ASSEMBLY MAT SEAL
BOM AND PIN OUT SHEET

ASSEMBLY DESCRIPTION	ASSEMBLY PART NUMBER	COMPONENT						BLOCKED TERMINALS																STATUS	COMMENTS	OPTIONAL ATTATCHMENTS SOLD SEPERATELY	
		THE PRESENCE OF AN ABBREVIATION INDICATES THE PRESENCE OF THAT COMPONENT.						CAVITY WITH A NUMBER INDICATES BLOCKED TERMINAL POSITION CAVITY WITHOUT A NUMBER INDICATES OPEN TERMINAL POSITION																			
		HOUSING KEY/COLOR	GROMMET CAP	PLR	CPA	MAT SEAL	RING SEAL	1	2	3	4	5	6	7	8	9	10	11	12	13	14	15	16			BACKSHELL WITH RIBS	BACKSHELL WITHOUT RIBS
KEY B, LIGHT GRAY, W/O CPA	33472-1671	B-LG	GC	PLR		M	R										10	11						SALEABLE			
KEY B, LIGHT GRAY, W/O CPA	33472-1672	B-LG	GC	PLR		M	R										10	11	12					SALEABLE			
KEY A, BLACK, W/CPA	33472-1673	A-BLK	GC	PLR	CPA	M	R										10	11		13	14	15	16	SALEABLE			
KEY B, LIGHT GRAY, W/O CPA	33472-1674	B-LG	GC	PLR		M	R												12					SALEABLE			
KEY A, BLACK, W/CPA	33472-1675	A-BLK	GC	PLR	CPA	M	R										10	11				15	16	SALEABLE			
KEY A, BLACK, W/CPA	33472-1676	A-BLK	GC	PLR	CPA	M	R								8	9	10	11	12			15	16	SALEABLE			
KEY B, LIGHT GRAY, W/O CPA	33472-1677	B-LG	GC	PLR		M	R				4		6	7	8				12		14			SALEABLE			
KEY A, BLACK, W/O CPA	33472-1678	A-BLK	GC	PLR		M	R					5												SALEABLE			
KEY A, BLACK, W/O CPA	33472-1679	A-BLK	GC	PLR		M	R					5											16	SALEABLE			
KEY A, BLACK, W/CPA	33472-1680	A-BLK	GC	PLR	CPA	M	R															15	16	SALEABLE			
KEY A, BLACK, W/O CPA	33472-1681	A-BLK	GC	PLR		M	R		2			5		7			10				14			SALEABLE			
KEY B, LIGHT GRAY, W/O CPA	33472-1682	B-LG	GC	PLR		M	R				4													SALEABLE			
KEY A, BLACK, W/O CPA	33472-1683	A-BLK	GC	PLR		M	R																16	SALEABLE			
KEY A, BLACK, W/O CPA	33472-1684	A-BLK	GC	PLR		M	R				4								12					SALEABLE			
KEY B, LIGHT GRAY, W/O CPA	33472-1685	B-LG	GC	PLR		M	R																16	SALEABLE			
KEY B, LIGHT GRAY, W/O CPA	33472-1686	B-LG	GC	PLR		M	R				4								12		14			SALEABLE			
KEY B, LIGHT GRAY, W/O CPA	33472-1687	B-LG	GC	PLR		M	R														14			SALEABLE			
KEY A, BLACK, W/O CPA	33472-1688	A-BLK	GC	PLR		M	R		2															SALEABLE			
KEY B, LIGHT GRAY, W/O CPA	33472-1689	B-LG	GC	PLR		M	R		2		4								12		14			SALEABLE			
KEY B, LIGHT GRAY, W/O CPA	33472-1690	B-LG	GC	PLR		M	R		2												14			SALEABLE			
KEY A, BLACK, W/O CPA	33472-1691	A-BLK	GC	PLR		M	R		2		4								12					SALEABLE			
KEY A, BLACK, W/O CPA	33472-1692	A-BLK	GC	PLR		M	R				4				8				12					SALEABLE			
KEY B, LIGHT GRAY, W/O CPA	33472-1693	B-LG	GC	PLR		M	R				4				8				12		14			SALEABLE			
KEY B, LIGHT GRAY, W/O CPA	33472-1694	B-LG	GC	PLR		M	R								8						14			SALEABLE			
KEY A, BLACK, W/O CPA	33472-1695	A-BLK	GC	PLR		M	R		2						8									SALEABLE			
NOT AVAILABLE	33472-1696																										
NOT AVAILABLE	33472-1697																										
NOT AVAILABLE	33472-1698																										
NOT AVAILABLE	33472-1699																										
NOT AVAILABLE	33472-1700																										
KEY A, BLACK, W/O CPA	33472-1701	A-BLK	GC	PLR		M	R		2		4				8				12					SALEABLE			
KEY B, LIGHT GRAY, W/O CPA	33472-1702	B-LG	GC	PLR		M	R		2		4				8				12		14			SALEABLE			
KEY B, LIGHT GRAY, W/O CPA	33472-1703	B-LG	GC	PLR		M	R		2						8						14			SALEABLE			
KEY A, BLACK, W/O CPA	33472-1704	A-BLK	GC	PLR		M	R		2		4													SALEABLE			
KEY B, LIGHT GRAY, W/O CPA	33472-1705	B-LG	GC	PLR		M	R		2		4										14			SALEABLE			
KEY A, BLACK, W/O CPA	33472-1706	A-BLK	GC	PLR		M	R		2				6				10			13	14	15	16	SALEABLE			
KEY A, BLACK, W/O CPA	33472-1707	A-BLK	GC	PLR		M	R		2				6				10	11		13	14	15	16	SALEABLE			
KEY A, BLACK, W/O CPA	33472-1708	A-BLK	GC	PLR		M	R		2				6				10			13	14			SALEABLE			
KEY A, BLACK, W/O CPA	33472-1709	A-BLK	GC	PLR		M	R				4				8									SALEABLE			
KEY A, BLACK, W/O CPA	33472-1710	A-BLK	GC	PLR		M	R		2				6					11						SALEABLE			
KEY A, BLACK, W/O CPA	33472-1711	A-BLK	GC	PLR		M	R		2				6											SALEABLE			
KEY A, BLACK, W/CPA	33472-1712	A-BLK	GC	PLR	CPA	M	R					5	6	7	8					13				SALEABLE			
KEY A, BLACK, W/CPA	33472-1713	A-BLK	GC	PLR	CPA	M	R					5	6	7	8			11	12	13	14			SALEABLE			
KEY A, BLACK, W/CPA	33472-1714	A-BLK	GC	PLR	CPA	M	R					5	6	7	8				12	13	14			SALEABLE			
KEY B, LIGHT GRAY, W/CPA	33472-1715	B-LG	GC	PLR	CPA	M	R	1	2	3	4	5	6		8		10		12	13				SALEABLE			
KEY B, LIGHT GRAY, W/CPA	33472-1716	B-LG	GC	PLR	CPA	M	R	1		3	4	5			8		10							SALEABLE			
KEY B, LIGHT GRAY, W/CPA	33472-1717	B-LG	GC	PLR	CPA	M	R	1			4	5			8		10							SALEABLE			
KEY A, BLACK, W/CPA	33472-1718	A-BLK	GC	PLR	CPA	M	R					5	6	7	8			11		13				SALEABLE			
KEY A, BLACK, W/CPA	33472-1719	A-BLK	GC	PLR	CPA	M	R				4	5	6									15	16	SALEABLE			
KEY A, BLACK, W/CPA	33472-1720	A-BLK	GC	PLR	CPA	M	R			3	4	5	6									15	16	SALEABLE			
KEY A, BLACK, W/CPA	33472-1721	A-BLK	GC	PLR	CPA	M	R								8					13	14	15	16	SALEABLE			
KEY A, BLACK, W/CPA	33472-1722	A-BLK	GC	PLR	CPA	M	R	1	2	3	4	5	6		8					13		15	16	SALEABLE			
KEY A, BLACK, W/CPA	33472-1723	A-BLK	GC	PLR	CPA	M	R							7	8			11	12	13	14			SALEABLE			
KEY A, BLACK, W/CPA	33472-1724	A-BLK	GC	PLR	CPA	M	R							7	8				12	13	14			SALEABLE			
KEY A, BLACK, W/CPA	33472-1725	A-BLK	GC	PLR	CPA	M	R							7	8					13				SALEABLE			
KEY A, BLACK, W/CPA	33472-1726	A-BLK	GC	PLR	CPA	M	R							7	8			11		13				SALEABLE			
KEY A, BLACK, W/CPA	33472-1727	A-BLK	GC	PLR	CPA	M	R													13	14	15	16	SALEABLE			
KEY B, LIGHT GRAY, W/CPA	33472-1728	B-LG	GC	PLR	CPA	M	R				4	5			8				12					SALEABLE			
KEY B, LIGHT GRAY, W/CPA	33472-1729	B-LG	GC	PLR	CPA	M	R	1	2		4	5	6		8		10		12	13				SALEABLE			
KEY B, LIGHT GRAY, W/CPA	33472-1730	B-LG	GC	PLR	CPA	M	R		2		4	5	6		8		10	11	12	13			16	SALEABLE			
KEY B, LIGHT GRAY, W/CPA	33472-1731	B-LG	GC	PLR	CPA	M	R				4	5							12	13				SALEABLE			
KEY B, LIGHT GRAY, W/CPA	33472-1732	B-LG	GC	PLR	CPA	M	R		2		4	5	6		8		10		12	13				SALEABLE			
KEY B, LIGHT GRAY, W/CPA	33472-1733	B-LG	GC	PLR	CPA	M	R						6					11						SALEABLE			
KEY B, LIGHT GRAY, W/CPA	33472-1734	B-LG	GC	PLR	CPA	M	R			3			6					11						SALEABLE			
KEY B, LIGHT GRAY, W/CPA	33472-1735	B-LG	GC	PLR	CPA	M	R		2	3	4	5	6		8		10		12	13				SALEABLE			
KEY A, BLACK, W/O CPA	33472-1736	A-BLK	GC	PLR		M	R		2		4	5	6				10		12	13	14			SALEABLE			
KEY B, LIGHT GRAY, W/CPA	33472-1737	B-LG	GC	PLR	CPA	M	R	1	2	3	4	5	6		8		10	11	12	13			16	SALEABLE			
KEY B, LIGHT GRAY, W/CPA	33472-1738	B-LG	GC	PLR	CPA	M	R										10							SALEABLE			
KEY B, LIGHT GRAY, W/CPA	33472-1739	B-LG	GC	PLR	CPA	M	R				4	5					10		12	13				SALEABLE			
KEY A, BLACK, W/CPA	33472-1740	A-BLK	GC	PLR	CPA	M	R					5								13				SALEABLE			
KEY A, BLACK, W/CPA	33472-1741	A-BLK	GC	PLR	CPA	M	R							7	8			11	12	13	14	15		SALEABLE			
KEY A, BLACK, W/CPA	33472-1742	A-BLK	GC	PLR	CPA	M	R							7	8				12	13	14	15		SALEABLE			
KEY A, BLACK, W/CPA	33472-1743	A-BLK	GC	PLR	CPA	M	R							7	8									SALEABLE			
KEY A, BLACK, W/CPA	33472-1744	A-BLK	GC	PLR	CPA	M	R											11						SALEABLE			
KEY A, BLACK, W/O CPA	33472-1745	A-BLK	GC	PLR		M	R										10	11				15	16	SALEABLE			
KEY A, BLACK, W/O CPA	33472-1746	A-BLK	GC	PLR		M	R	1	2	3	4	5	6					11	12	13	14	15	16	SALEABLE			
KEY A, BLACK, W/O CPA	33472-1747	A-BLK	GC	PLR		M	R	1	2	3	4	5	6		8	9					14	15	16	SALEABLE			
KEY A, BLACK, W/O CPA	33472-1748	A-BLK	GC	PLR		M	R	1	2	3	4	5	6						12	13	14	15	16	SALEABLE			
KEY A, BLACK, W/O CPA	33472-1749	A-BLK	GC	PLR		M	R							7	8	9	10	11	12	13	14	15	16	SALEABLE			
KEY A, BLACK, W/O CPA	33472-1750	A-BLK	GC	PLR		M	R	1	2	3	4	5	6								14	15	16	SALEABLE			
KEY A, BLACK, W/O CPA	33472-1751	A-BLK	GC	PLR		M	R								8	9	10	11	12	13	14	15	16	SALEABLE			
KEY A, BLACK, W/O CPA	33472-1752	A-BLK	GC	PLR		M	R										10	11	12	13	14	15	16	SALEABLE			
KEY A, BLACK, W/O CPA	33472-1753	A-BLK	GC	PLR		M	R											11	12	13	14	15	16	SALEABLE			
KEY A, BLACK, W/O CPA	33472-1754	A-BLK	GC	PLR		M	R	1	2	3	4	5	6											SALEABLE			
KEY A, BLACK, W/O CPA	33472-1755	A-BLK	GC	PLR		M	R								8	9					14	15	16	SALEABLE			
KEY A, BLACK, W/O CPA	33472-1756	A-BLK	GC	PLR		M	R												12	13	14	15	16	SALEABLE			
KEY A, BLACK, W/O CPA	33472-1757	A-BLK	GC	PLR		M	R							7	8	9	10							SALEABLE			
KEY A, BLACK, W/O CPA	33472-1758	A-BLK	GC	PLR		M	R														14	15	16	SALEABLE			
KEY A, BLACK, W/O CPA	33472-1759	A-BLK	GC	PLR		M	R		2				6	7	8									SALEABLE			
KEY A, BLACK, W/O CPA	33472-1760	A-BLK	GC	PLR		M	R		2		4		6	7	8				12					SALEABLE			
KEY A, BLACK, W/O CPA	33472-1761	A-BLK	GC	PLR		M	R		2			5	6	7	8	9	10		12		14	15	16	SALEABLE			
KEY A, BLACK, W/O CPA	33472-1762	A-BLK	GC	PLR		M	R		2			5	6	7	8		10		12		14	15		SALEABLE			
KEY A, BLACK, W/O CPA	33472-1763	A-BLK	GC	PLR		M	R		2							9	10					15	16	SALEABLE			
KEY A, BLACK, W/O CPA	33472-1764	A-BLK	GC	PLR		M	R		2								10					15		SALEABLE			
KEY A, BLACK, W/O CPA	33472-1765	A-BLK	GC	PLR		M	R	1	2	3	4	5	6	7	8	9	10							SALEABLE			
KEY A, BLACK, W/O CPA	33472-1766	A-BLK	GC	PLR		M	R	1	2	3	4	5	6				10	11	12	13	14	15	16	SALEABLE			
KEY C, DARK GRAY, W/O CPA	33472-1767	C-DG	GC	PLR		M	R																	SALEABLE			

molex

MX150 RECEPTACLE 2X8 SEALED ASSEMBLY MAT SEAL
BOM AND PIN OUT SHEET

ASSEMBLY DESCRIPTION	ASSEMBLY PART NUMBER	COMPONENT						BLOCKED TERMINALS																STATUS	COMMENTS	OPTIONAL ATTATCHMENTS SOLD SEPERATELY	
		THE PRESENCE OF AN ABBREVIATION INDICATES THE PRESENCE OF THAT COMPONENT.						CAVITY WITH A NUMBER INDICATES BLOCKED TERMINAL POSITION CAVITY WITHOUT A NUMBER INDICATES OPEN TERMINAL POSITION																			
		HOUSING KEY/COLOR	GROMMET CAP	PLR	CPA	MAT SEAL	RING SEAL	1	2	3	4	5	6	7	8	9	10	11	12	13	14	15	16			BACKSHELL WITH RIBS	BACKSHELL WITHOUT RIBS
KEY D, STONE GRAY, W/O CPA	33472-1768	D-SG	GC	PLR		M	R																	SALEABLE			
KEY C, DARK GRAY, W/CPA	33472-1769	C-DG	GC	PLR	CPA	M	R																	SALEABLE			
KEY D, STONE GRAY, W/CPA	33472-1770	D-SG	GC	PLR	CPA	M	R																	SALEABLE			
KEY B, LIGHT GRAY, W/O CPA	33472-1771	B-LG	GC	PLR		M	R	1	2	3	4	5	6	7	8	9	10		12		14	15	16	SALEABLE			
KEY B, LIGHT GRAY, W/O CPA	33472-1772	B-LG	GC	PLR		M	R	1	2	3	4	5	6	7	8	9	10		12		14	15		SALEABLE			
KEY B, LIGHT GRAY, W/CPA	33472-1773	B-LG	GC	PLR	CPA	M	R				4	5					10	11	12	13				SALEABLE			
KEY B, LIGHT GRAY, W/CPA	33472-1774	B-LG	GC	PLR	CPA	M	R				4	5			8		10	11	12	13				SALEABLE			
KEY B, LIGHT GRAY, W/CPA	33472-1775	B-LG	GC	PLR	CPA	M	R				4	5			8		10	11	12	13			16	SALEABLE			
KEY B, LIGHT GRAY, W/CPA	33472-1776	B-LG	GC	PLR	CPA	M	R				4	5			8		10		12	13				SALEABLE			
KEY B, LIGHT GRAY, W/CPA	33472-1777	B-LG	GC	PLR	CPA	M	R				4	5						11	12	13				SALEABLE			
KEY A, BLACK, W/O CPA	33472-1778	A-BLK	GC	PLR		M	R			3	4					9	10					15	16	SALEABLE			
KEY A, BLACK, W/O CPA	33472-1779	A-BLK	GC	PLR		M	R		2		4		6	7		9		11		13		15	16	SALEABLE			
KEY A, BLACK, W/CPA	33472-1780	A-BLK	GC	PLR	CPA	M	R														14	15	16	SALEABLE			
KEY A, BLACK, W/O CPA	33472-1781	A-BLK	GC	PLR		M	R				4	5		7										SALEABLE			
KEY A, BLACK, W/CPA	33472-1782	A-BLK	GC	PLR	CPA	M	R												12	13	14	15	16	SALEABLE			
KEY A, BLACK, W/O CPA	33472-1783	A-BLK	GC	PLR		M	R	1	2	3	4			7	8	9	10	11	12			15	16	SALEABLE			
KEY A, BLACK, W/O CPA	33472-1784	A-BLK	GC	PLR		M	R	1	2	3	4				8	9	10	11	12				16	SALEABLE			
KEY A, BLACK, W/O CPA	33472-1785	A-BLK	GC	PLR		M	R		2	3	4					9	10					15	16	SALEABLE			
KEY A, BLACK, W/O CPA	33472-1786	A-BLK	GC	PLR		M	R		2	3	4	5	6	7	8	9	10		12		14	15	16	SALEABLE			
KEY A, BLACK, W/O CPA	33472-1787	A-BLK	GC	PLR		M	R					5			8		10	11		13		15		SALEABLE			
KEY A, BLACK, W/O CPA	33472-1788	A-BLK	GC	PLR		M	R			3		5			8		10	11		13		15		SALEABLE			
KEY A, BLACK, W/O CPA	33472-1789	A-BLK	GC	PLR		M	R					5			8		10	11			14			SALEABLE			
KEY A, BLACK, W/O CPA	33472-1790	A-BLK	GC	PLR		M	R			3	4	5			8		10	11	12	13	14	15		SALEABLE			
KEY A, BLACK, W/O CPA	33472-1791	A-BLK	GC	PLR		M	R			3	4					9	10					15	16	SALEABLE			
KEY A, BLACK, W/O CPA	33472-1792	A-BLK	GC	PLR		M	R	1		3		5		7	8		10	11			14	15		SALEABLE			
KEY A, BLACK, W/O CPA	33472-1793	A-BLK	GC	PLR		M	R													13	14	15	16	SALEABLE			
KEY A, BLACK, W/O CPA	33472-1794	A-BLK	GC	PLR		M	R		2		4		6	7	8				12					SALEABLE			
KEY A, BLACK, W/CPA	33472-1795	A-BLK	GC	PLR	CPA	M	R												12		14			SALEABLE			
KEY A, BLACK, W/O CPA	33472-1796	A-BLK	GC	PLR		M	R	1				5		7	8		10	11			14	15		SALEABLE			
KEY A, BLACK, W/O CPA	33472-1797	A-BLK	GC	PLR		M	R					5			8		10	11						SALEABLE			
KEY A, BLACK, W/O CPA	33472-1798	A-BLK	GC	PLR		M	R	1		3		5		7				11				15		SALEABLE			
KEY B, LIGHT GRAY, W/CPA	33472-1799	B-LG	GC	PLR	CPA	M	R		2		4				8				12		14			SALEABLE			
KEY A, BLACK, W/O CPA	33472-1800	A-BLK	GC	PLR		M	R	1		3		5												SALEABLE			
KEY B, LIGHT GRAY, W/CPA	33472-1801	B-LG	GC	PLR	CPA	M	R				4	5			8				12	13				SALEABLE			
KEY B, LIGHT GRAY, W/CPA	33472-1802	B-LG	GC	PLR	CPA	M	R		2		4	5	6		8				12	13				SALEABLE			
KEY B, LIGHT GRAY, W/CPA	33472-1803	B-LG	GC	PLR	CPA	M	R		2		4	5	6		8		10		12	13				SALEABLE			
KEY B, LIGHT GRAY, W/CPA	33472-1804	B-LG	GC	PLR	CPA	M	R		2	3	4	5	6		8				12	13				SALEABLE			
KEY A, BLACK, W/O CPA	33472-1805	A-BLK	GC	PLR		M	R														14	15		SALEABLE			
KEY A, BLACK, W/CPA	33472-1806	A-BLK	GC	PLR	CPA	M	R	1		3	4								12	13	14	15	16	SALEABLE			
KEY A, BLACK, W/CPA	33472-1807	A-BLK	GC	PLR	CPA	M	R	1	2	3	4	5			8			11	12	13	14	15	16	SALEABLE			
KEY A, BLACK, W/CPA	33472-1808	A-BLK	GC	PLR	CPA	M	R		2	3	4	5			8			11						SALEABLE			
KEY A, BLACK, W/CPA	33472-1809	A-BLK	GC	PLR	CPA	M	R			3	4													SALEABLE			
KEY A, BLACK, W/O CPA	33472-1810	A-BLK	GC	PLR		M	R	1	2	3	4	5	6	7	8					13	14	15	16	SALEABLE			
KEY A, BLACK, W/O CPA	33472-1811	A-BLK	GC	PLR		M	R	1	2	3										13	14	15		SALEABLE			
KEY A, BLACK, W/O CPA	33472-1812	A-BLK	GC	PLR		M	R	1	2											13	14	15		SALEABLE			
KEY B, LIGHT GRAY, W/O CPA	33472-1813	B-LG	GC	PLR		M	R						6	7	8			11						SALEABLE			
KEY B, LIGHT GRAY, W/O CPA	33472-1814	B-LG	GC	PLR		M	R						6	7	8			11			14			SALEABLE			
KEY B, LIGHT GRAY, W/O CPA	33472-1815	B-LG	GC	PLR		M	R						6			9		11	12	13		15	16	SALEABLE			
KEY B, LIGHT GRAY, W/O CPA	33472-1816	B-LG	GC	PLR		M	R						6			9	10	11	12	13	14	15	16	SALEABLE			
KEY B, LIGHT GRAY, W/O CPA	33472-1817	B-LG	GC	PLR		M	R	1	2	3	4	5	6			9	10	11	12	13	14	15	16	SALEABLE			
KEY A, BLACK, W/O CPA	33472-1818	A-BLK	GC	PLR		M	R									9	10	11	12	13	14	15	16	SALEABLE			
KEY A, BLACK, W/CPA	33472-1819	A-BLK	GC	PLR	CPA	M	R				4	5	6	7	8	9	10	11	12	13	14	15	16	SALEABLE			
KEY A, BLACK, W/CPA	33472-1820	A-BLK	GC	PLR	CPA	M	R								8	9			12	13	14	15	16	SALEABLE			
KEY B, LIGHT GRAY, W/CPA	33472-1821	B-LG	GC	PLR	CPA	M	R				4	5		7					12	13				SALEABLE			
KEY B, LIGHT GRAY, W/CPA	33472-1822	B-LG	GC	PLR	CPA	M	R				4	5		7			10		12	13				SALEABLE			
KEY B, LIGHT GRAY, W/CPA	33472-1823	B-LG	GC	PLR	CPA	M	R				4	5		7	8		10		12	13				SALEABLE			
KEY B, LIGHT GRAY, W/CPA	33472-1824	B-LG	GC	PLR	CPA	M	R				4	5		7	8	9	10		12	13				SALEABLE			
KEY B, LIGHT GRAY, W/CPA	33472-1825	B-LG	GC	PLR	CPA	M	R		2		4	5	6	7	8	9	10		12	13				SALEABLE			
KEY A, BLACK, W/O CPA	33472-1826	A-BLK	GC	PLR		M	R	1	2	3	4	5	6			9				13	14	15	16	SALEABLE			
KEY A, BLACK, W/O CPA	33472-1827	A-BLK	GC	PLR		M	R	1	2	3	4	5	6			9	10	11	12	13	14	15	16	SALEABLE			
KEY A, BLACK, W/O CPA	33472-1828	A-BLK	GC	PLR		M	R						6				10	11	12	13	14			SALEABLE			
KEY A, BLACK, W/O CPA	33472-1829	A-BLK	GC	PLR		M	R	1	2	3	4	5	6				10	11	12	13	14			SALEABLE			
KEY A, BLACK, W/O CPA	33472-1830	A-BLK	GC	PLR		M	R	1	2	3	4	5	6							13	14			SALEABLE			
KEY A, BLACK, W/O CPA	33472-1831	A-BLK	GC	PLR		M	R						6			9	10	11	12	13	14	15	16	SALEABLE			
KEY A, BLACK, W/O CPA	33472-1832	A-BLK	GC	PLR		M	R		2						8								16	SALEABLE			
KEY A, BLACK, W/O CPA	33472-1833	A-BLK	GC	PLR		M	R	1	2	3	4	5	6		8		10						16	SALEABLE			
KEY A, BLACK, W/O CPA	33472-1834	A-BLK	GC	PLR		M	R	1	2	3	4	5	6	7	8	9	10						16	SALEABLE			
KEY A, BLACK, W/O CPA	33472-1835	A-BLK	GC	PLR		M	R	1	2	3	4	5	6	7		9		11		13		15	16	SALEABLE			
KEY B, LIGHT GRAY, W/O CPA	33472-1836	B-LG	GC	PLR		M	R			3	4	5	6				10	11	12	13				SALEABLE			
KEY A, BLACK, W/O CPA	33472-1837	A-BLK	GC	PLR		M	R											11	12	13	14			SALEABLE			
KEY A, BLACK, W/O CPA	33472-1838	A-BLK	GC	PLR		M	R											11			14			SALEABLE			
KEY A, BLACK, W/O CPA	33472-1839	A-BLK	GC	PLR		M	R	1		3								11	12	13		15	16	SALEABLE			
KEY A, BLACK, W/O CPA	33472-1840	A-BLK	GC	PLR		M	R	1		3					8	9		11	12	13	14	15	16	SALEABLE			
KEY A, BLACK, W/O CPA	33472-1841	A-BLK	GC	PLR		M	R	1	2			5	6	7	8									SALEABLE			
KEY A, BLACK, W/O CPA	33472-1842	A-BLK	GC	PLR		M	R			3	4							11	12					SALEABLE			
KEY A, BLACK, W/O CPA	33472-1843	A-BLK	GC	PLR		M	R									9				13	14	15	16	SALEABLE			
KEY A, BLACK, W/O CPA	33472-1844	A-BLK	GC	PLR		M	R			3	4					9	10	11	12	13	14	15	16	SALEABLE			
KEY B, LIGHT GRAY, W/O CPA	33472-1845	B-LG	GC	PLR		M	R			3	4	5	6		8	9	10	11	12	13	14			SALEABLE			
KEY A, BLACK, W/O CPA	33472-1846	A-BLK	GC	PLR		M	R									9	10					15	16	SALEABLE			
KEY A, BLACK, W/O CPA	33472-1847	A-BLK	GC	PLR		M	R										10					15		SALEABLE			
KEY A, BLACK, W/O CPA	33472-1848	A-BLK	GC	PLR		M	R	1	2	3	4	5	6	7	8	9	10	11			14	15	16	SALEABLE			
KEY A, BLACK, W/O CPA	33472-1849	A-BLK	GC	PLR		M	R		2						8						14	15	16	SALEABLE			
KEY A, BLACK, W/O CPA	33472-1850	A-BLK	GC	PLR		M	R	1		3						9		11	12	13		15	16	SALEABLE			
KEY A, BLACK, W/O CPA	33472-1851	A-BLK	GC	PLR		M	R	1	2	3	4	5	6		8		10				14	15	16	SALEABLE			
KEY A, BLACK, W/O CPA	33472-1852	A-BLK	GC	PLR		M	R	1	2			5		7	8	9	10	11	12	13	14	15	16	SALEABLE			
KEY A, BLACK, W/O CPA	33472-1853	A-BLK	GC	PLR		M	R		2			5		7		9	10	11	12	13	14	15	16	SALEABLE			
KEY A, BLACK, W/O CPA	33472-1854	A-BLK	GC	PLR		M	R		2			5		7		9							16	SALEABLE			
KEY A, BLACK, W/O CPA	33472-1855	A-BLK	GC	PLR		M	R					5		7									16	SALEABLE			
KEY A, BLACK, W/O CPA	33472-1856	A-BLK	GC	PLR		M	R		2					7		9							16	SALEABLE			
KEY A, BLACK, W/O CPA	33472-1857	A-BLK	GC	PLR		M	R							7									16	SALEABLE			
KEY A, BLACK, W/O CPA	33472-1858	A-BLK	GC	PLR		M	R		2			5		7		9		11	12	13	14	15	16	SALEABLE			
KEY A, BLACK, W/O CPA	33472-1859	A-BLK	GC	PLR		M	R		2			5				9			12	13	14	15		SALEABLE			
KEY A, BLACK, W/O CPA	33472-1860	A-BLK	GC	PLR		M	R		2			5				9								SALEABLE			
KEY A, BLACK, W/O CPA	33472-1861	A-BLK	GC	PLR		M	R		2							9								SALEABLE			
KEY A, BLACK, W/O CPA	33472-1862	A-BLK	GC	PLR		M	R		2					7									16	SALEABLE			
KEY A, BLACK, W/O CPA	33472-1863	A-BLK	GC	PLR		M	R	1		3					8			11	12	13	14	15	16	SALEABLE			
KEY A, BLACK, W/O CPA	33472-1864	A-BLK	GC	PLR		M	R									9		11	12	13	14	15	16	SALEABLE			

molex

MX150 RECEPTACLE 2X8 SEALED ASSEMBLY MAT SEAL
BOM AND PIN OUT SHEET

ASSEMBLY DESCRIPTION	ASSEMBLY PART NUMBER	COMPONENT						BLOCKED TERMINALS																STATUS	COMMENTS	OPTIONAL ATTATCHMENTS SOLD SEPERATELY	
		THE PRESENCE OF AN ABBREVIATION INDICATES THE PRESENCE OF THAT COMPONENT.						CAVITY WITH A NUMBER INDICATES BLOCKED TERMINAL POSITION CAVITY WITHOUT A NUMBER INDICATES OPEN TERMINAL POSITION																			
		HOUSING KEY/COLOR	GROMMET CAP	PLR	CPA	MAT SEAL	RING SEAL	1	2	3	4	5	6	7	8	9	10	11	12	13	14	15	16			BACKSHELL WITH RIBS	BACKSHELL WITHOUT RIBS
KEY A, BLACK, W/O CPA	33472-1865	A-BLK	GC	PLR		M	R	1			4		6	7	8		10			13	14	15		SALEABLE			
KEY A, BLACK, W/CPA	33472-1866	A-BLK	GC	PLR	CPA	M	R					5												SALEABLE			
KEY A, BLACK, W/O CPA	33472-1867	A-BLK	GC	PLR		M	R		2			5		7		9			12	13	14	15	16	SALEABLE			
KEY A, BLACK, W/CPA	33472-1868	A-BLK	GC	PLR	CPA	M	R	1	2	3	4		6	7		9	10	11	12	13	14	15	16	SALEABLE			
KEY A, BLACK, W/O CPA	33472-1869	A-BLK	GC	PLR		M	R				4	5	6	7	8				12	13	14	15	16	SALEABLE			
KEY A, BLACK, W/O CPA	33472-1870	A-BLK	GC	PLR		M	R	1	2	3	4					9	10	11		13				SALEABLE			
KEY A, BLACK, W/O CPA	33472-1871	A-BLK	GC	PLR		M	R	1	2			5	6	7	8	9	10	11	12	13	14		16	SALEABLE			
KEY A, BLACK, W/O CPA	33472-1872	A-BLK	GC	PLR		M	R	1	2			5	6	7	8	9	10						16	SALEABLE			
KEY A, BLACK, W/O CPA	33472-1873	A-BLK	GC	PLR		M	R					5	6	7		9		11	12	13	14		16	SALEABLE			
KEY A, BLACK, W/O CPA	33472-1874	A-BLK	GC	PLR		M	R					5	6	7		9							16	SALEABLE			
KEY A, BLACK, W/O CPA	33472-1875	A-BLK	GC	PLR		M	R	1	2						8		10	11	12	13	14		16	SALEABLE			
KEY A, BLACK, W/O CPA	33472-1876	A-BLK	GC	PLR		M	R											11	12	13	14		16	SALEABLE			
KEY A, BLACK, W/O CPA	33472-1877	A-BLK	GC	PLR		M	R	1	2						8		10						16	SALEABLE			
KEY A, BLACK, W/O CPA	33472-1878	A-BLK	GC	PLR		M	R			3		5		7			10	11		13		15		SALEABLE			
KEY A, BLACK, W/O CPA	33472-1879	A-BLK	GC	PLR		M	R	1	2	3	4	5			8	9	10	11	12	13	14		16	SALEABLE			
KEY A, BLACK, W/O CPA	33472-1880	A-BLK	GC	PLR		M	R												12	13	14			SALEABLE			
KEY A, BLACK, W/O CPA	33472-1881	A-BLK	GC	PLR		M	R		2							9			12	13	14			SALEABLE			
KEY A, BLACK, W/O CPA	33472-1882	A-BLK	GC	PLR		M	R	1			4	5	6		8				12	13	14		16	SALEABLE			
KEY A, BLACK, W/O CPA	33472-1883	A-BLK	GC	PLR		M	R	1	2		4	5	6		8	9	10		12	13	14	15	16	SALEABLE			
KEY A, BLACK, W/O CPA	33472-1884	A-BLK	GC	PLR		M	R				4	5			8		10	11	12	13	14	15		SALEABLE			
KEY A, BLACK, W/O CPA	33472-1885	A-BLK	GC	PLR		M	R							7	8	9	10	11	12	13	14			SALEABLE			
KEY A, YELLOW, W/CPA	33472-1886	A-YW	GC	PLR	CPA	M	R																	SALEABLE			
KEY A, BLACK, W/O CPA	33472-1887	A-BLK	GC	PLR		M	R	1			4	5						11		13	14	15		SALEABLE			
KEY A, BLACK, W/CPA	33472-1888	A-BLK	GC	PLR	CPA	M	R						6			9						15	16	SALEABLE			
KEY A, BLACK, W/O CPA	33472-1889	A-BLK	GC	PLR		M	R													13	14			SALEABLE			
KEY A, BLACK, W/CPA	33472-1890	A-BLK	GC	PLR	CPA	M	R					5			8									SALEABLE			
KEY A, BLACK, W/CPA	33472-1891	A-BLK	GC	PLR	CPA	M	R					5	6	7	8	9	10	11	12					SALEABLE			
KEY A, BLACK, W/O CPA	33472-1894	A-BLK	GC	PLR		M	R					5	6	7	8				12	13	14	15	16	SALEABLE			
KEY A, BLACK, W/O CPA	33472-1895	A-BLK	GC	PLR		M	R	1	2	3						9	10	11		13				SALEABLE			
KEY A, BLACK, W/O CPA	33472-1896	A-BLK	GC	PLR		M	R	1	2			5												SALEABLE			
KEY A, BLACK, W/O CPA	33472-1897	A-BLK	GC	PLR		M	R					5								13	14			SALEABLE			
KEY A, BLACK, W/O CPA	33472-1898	A-BLK	GC	PLR		M	R	1	2			5								13	14			SALEABLE			
KEY A, BLACK, W/O CPA	33472-1899	A-BLK	GC	PLR		M	R					5		7	8	9	10	11	12	13	14			SALEABLE			
KEY A, BLACK, W/O CPA	33472-1900	A-BLK	GC	PLR		M	R	1	2			5		7	8	9	10	11	12	13	14			SALEABLE			
KEY A, BLACK, W/O CPA	33472-1901	A-BLK	GC	PLR		M	R								8		10	11						SALEABLE			
KEY A, BLACK, W/O CPA	33472-1902	A-BLK	GC	PLR		M	R			3														SALEABLE			
KEY A, BLACK, W/O CPA	33472-1903	A-BLK	GC	PLR		M	R			3				7	8	9	10	11	12	13	14			SALEABLE			
KEY A, BLACK, W/O CPA	33472-1904	A-BLK	GC	PLR		M	R		2						8		10	11			14			SALEABLE			
KEY A, BLACK, W/O CPA	33472-1905	A-BLK	GC	PLR		M	R	1				5			8		10	11		13		15		SALEABLE			
KEY A, BLACK, W/O CPA	33472-1906	A-BLK	GC	PLR		M	R										10			13	14	15	16	SALEABLE			
KEY A, BLACK, W/O CPA	33472-1907	A-BLK	GC	PLR		M	R	1			4	5	6		8				12	13	14			SALEABLE			
KEY A, BLACK, W/CPA	33472-1908	A-BLK	GC	PLR	CPA	M	R											11	12	13	14			SALEABLE			
KEY A, BLACK, W/CPA	33472-1909	A-BLK	GC	PLR	CPA	M	R	1		3		5	6						12	13				SALEABLE			
KEY A, BLACK, W/CPA	33472-1910	A-BLK	GC	PLR	CPA	M	R							7	8	9							16	SALEABLE			
KEY A, BLACK, W/O CPA	33472-1911	A-BLK	GC	PLR		M	R			3				7	8	9	10	11	12	13	14	15	16	SALEABLE			
KEY A, BLACK, W/O CPA	33472-1912	A-BLK	GC	PLR		M	R			3												15	16	SALEABLE			
KEY A, BLACK, W/O CPA	33472-1913	A-BLK	GC	PLR		M	R							7	8	9	10	11	12	13	14		16	SALEABLE			
KEY A, BLACK, W/O CPA	33472-1914	A-BLK	GC	PLR		M	R													13	14		16	SALEABLE			
KEY A, BLACK, W/CPA	33472-1915	A-BLK	GC	PLR	CPA	M	R	1	2	3	4	5	6	7	8	9	10	11	12	13	14	15	16	SALEABLE			
KEY A, BLACK, W/O CPA	33472-1916	A-BLK	GC	PLR		M	R	1				5						11		13		15		SALEABLE			
KEY A, BLACK, W/O CPA	33472-1917	A-BLK	GC	PLR		M	R										10							SALEABLE			
KEY A, BLACK, W/O CPA	33472-1918	A-BLK	GC	PLR		M	R														14			SALEABLE			
KEY A, BLACK, W/CPA	33472-1919	A-BLK	GC	PLR	CPA	M	R	1	2			5			8						14	15		SALEABLE			
KEY A, BLACK, W/CPA	33472-1920	A-BLK	GC	PLR	CPA	M	R	1	2			5	6	7	8	9	10	11	12		14	15		SALEABLE			
KEY A, BLACK, W/O CPA	33472-1921	A-BLK	GC	PLR		M	R			3										13	14			SALEABLE			
KEY A, BLACK, W/O CPA	33472-1922	A-BLK	GC	PLR		M	R	1	2	3	4	5	6	7	8	9			12	13		15	16	SALEABLE			
KEY A, BLACK, W/O CPA	33472-1923	A-BLK	GC	PLR		M	R	1	2		4	5		7	8	9						15	16	SALEABLE			
KEY A, BLACK, W/O CPA	33472-1924	A-BLK	GC	PLR		M	R								8								16	SALEABLE			
KEY A, BLACK, W/O CPA	33472-1925	A-BLK	GC	PLR		M	R			3			6											SALEABLE			
KEY A, BLACK, W/O CPA	33472-1926	A-BLK	GC	PLR		M	R			3			6							13	14			SALEABLE			
KEY A, BLACK, W/O CPA	33472-1927	A-BLK	GC	PLR		M	R			3	4	5	6	7		9						15	16	SALEABLE			
KEY A, BLACK, W/O CPA	33472-1928	A-BLK	GC	PLR		M	R						6	7	8						14	15	16	SALEABLE			
KEY A, BLACK, W/O CPA	33472-1929	A-BLK	GC	PLR		M	R						6	7	8				12	13	14	15	16	SALEABLE			
KEY A, BLACK, W/O CPA	33472-1930	A-BLK	GC	PLR		M	R	1	2	3	4	5				9	10	11	12	13				SALEABLE			
KEY A, BLACK, W/O CPA	33472-1931	A-BLK	GC	PLR		M	R	1													14			SALEABLE			
KEY A, BLACK, W/O CPA	33472-1932	A-BLK	GC	PLR		M	R	1	2		4	5	6				10				14			SALEABLE			
KEY A, BLACK, W/O CPA	33472-1933	A-BLK	GC	PLR		M	R								8		10	11		13		15		SALEABLE			
KEY A, BLACK, W/O CPA	33472-1934	A-BLK	GC	PLR		M	R		2			5			8		10	11			14			SALEABLE			
KEY A, BLACK, W/O CPA	33472-1935	A-BLK	GC	PLR		M	R		2			5			8		10	11		13	14	15		SALEABLE			
KEY A, BLACK, W/CPA	33472-1936	A-BLK	GC	PLR	CPA	M	R		2		4		6				10		12		14	15		SALEABLE			
KEY B, LIGHT GRAY, W/CPA	33472-1937	B-LG	GC	PLR	CPA	M	R		2		4		6				10		12		14	15		SALEABLE			
KEY A, BLACK, W/CPA	33472-1938	A-BLK	GC	PLR	CPA	M	R					5	6	7			10			13				SALEABLE			
KEY A, BLACK, W/CPA	33472-1939	A-BLK	GC	PLR	CPA	M	R	1	2	3		5	6						12	13				SALEABLE			
KEY A, BLACK, W/CPA	33472-1940	A-BLK	GC	PLR	CPA	M	R							7			10							SALEABLE			
KEY A, BLACK, W/CPA	33472-1941	A-BLK	GC	PLR	CPA	M	R				4	5	6	7			10				14	15	16	SALEABLE			
KEY A, BLACK, W/O CPA	33472-1942	A-BLK	GC	PLR		M	R												12	13				SALEABLE			
KEY A, BLACK, W/O CPA	33472-1943	A-BLK	GC	PLR		M	R								8			11	12	13			16	SALEABLE			
KEY A, BLACK, W/O CPA	33472-1944	A-BLK	GC	PLR		M	R								8					13			16	SALEABLE			
KEY A, BLACK, W/O CPA	33472-1945	A-BLK	GC	PLR		M	R				4	5			8		10	11		13	14			SALEABLE			
KEY A, BLACK, W/O CPA	33472-1946	A-BLK	GC	PLR		M	R	1											12		14			SALEABLE			
KEY A, BLACK, W/O CPA	33472-1947	A-BLK	GC	PLR		M	R					5			8		10	11		13				SALEABLE			
KEY A, BLACK, W/O CPA	33472-1948	A-BLK	GC	PLR		M	R				4				8					13	14	15	16	SALEABLE			
KEY A, BLACK, W/CPA	33472-1949	A-BLK	GC	PLR	CPA	M	R						6	7	8			11	12	13	14	15		SALEABLE			
KEY A, BLACK, W/O CPA	33472-1950	A-BLK	GC	PLR		M	R					5	6	7	8									SALEABLE			
KEY A, BLACK, W/CPA	33472-1951	A-BLK	GC	PLR	CPA	M	R											11	12		14	15	16	SALEABLE			
KEY A, BLACK, W/O CPA	33472-1952	A-BLK	GC	PLR		M	R					5	6	7	8			11	12	13	14	15		SALEABLE			
KEY A, BLACK, W/CPA	33472-1953	A-BLK	GC	PLR	CPA	M	R						6	7	8		10	11	12	13	14	15		SALEABLE			
KEY A, BLACK, W/CPA	33472-1954	A-BLK	GC	PLR	CPA	M	R					5	6	7	8			11	12	13	14	15		SALEABLE			
KEY A, BLACK, W/CPA	33472-1955	A-BLK	GC	PLR	CPA	M	R					5	6	7	8									SALEABLE			
KEY B, LIGHT GRAY, W/O CPA	33472-1956	B-LG	GC	PLR		M	R			3														SALEABLE			
KEY A, BLACK, W/O CPA	33472-1957	A-BLK	GC	PLR		M	R	1	2	3	4	5	6	7	8				12	13	14	15	16	SALEABLE			
KEY A, BLACK, W/O CPA	33472-1958	A-BLK	GC	PLR		M	R							7	8						14	15	16	SALEABLE			
KEY A, BLACK, W/O CPA	33472-1959	A-BLK	GC	PLR		M	R										10	11	12	13	14			SALEABLE			
KEY A, BLACK, W/O CPA	33472-1960	A-BLK	GC	PLR		M	R				4		6		8					13	14	15	16	SALEABLE			
KEY A, BLACK, W/O CPA	33472-1961	A-BLK	GC	PLR		M	R			3			6	7	8	9	10	11	12	13	14			SALEABLE			
KEY B, LIGHT GRAY, W/O CPA	33472-1962	B-LG	GC	PLR		M	R													13				SALEABLE			
KEY A, BLACK, W/O CPA	33472-1963	A-BLK	GC	PLR		M	R					5		7	8			11		13		15		SALEABLE			

molex

MX150 RECEPTACLE 2X8 SEALED ASSEMBLY MAT SEAL
BOM AND PIN OUT SHEET

ASSEMBLY DESCRIPTION	ASSEMBLY PART NUMBER	COMPONENT						BLOCKED TERMINALS																STATUS	COMMENTS	OPTIONAL ATTATCHMENTS SOLD SEPERATELY	
		THE PRESENCE OF AN ABBREVIATION INDICATES THE PRESENCE OF THAT COMPONENT.						CAVITY WITH A NUMBER INDICATES BLOCKED TERMINAL POSITION CAVITY WITHOUT A NUMBER INDICATES OPEN TERMINAL POSITION																			
		HOUSING KEY/COLOR	GROMMET CAP	PLR	CPA	MAT SEAL	RING SEAL	1	2	3	4	5	6	7	8	9	10	11	12	13	14	15	16			BACKSHELL WITH RIBS	BACKSHELL WITHOUT RIBS
KEY A, BLACK, W/O CPA	33472-1964	A-BLK	GC	PLR		M	R													13				SALEABLE			
KEY A, BLACK, W/CPA	33472-1965	A-BLK	GC	PLR	CPA	M	R					5	6						12	13		15		SALEABLE			
KEY A, BLACK, W/CPA	33472-1966	A-BLK	GC	PLR	CPA	M	R						6	7	8		10	11						SALEABLE			
KEY A, BLACK, W/CPA	33472-1967	A-BLK	GC	PLR	CPA	M	R						6	7	8									SALEABLE			
KEY A, BLACK, W/O CPA	33472-1968	A-BLK	GC	PLR		M	R	1	2						8	9		11		13		15	16	SALEABLE			
KEY A, BLACK, W/CPA	33472-1969	A-BLK	GC	PLR	CPA	M	R											11	12	13	14	15		SALEABLE			
KEY A, BLACK, W/CPA	33472-1970	A-BLK	GC	PLR	CPA	M	R				4	5			8					13	14	15	16	SALEABLE			
KEY A, BLACK, W/O CPA	33472-1971	A-BLK	GC	PLR		M	R	1	2	3	4	5	6	7	8									SALEABLE			
KEY A, BLACK, W/O CPA	33472-1972	A-BLK	GC	PLR		M	R		2						8		10	11				15	16	SALEABLE			
KEY A, BLACK, W/O CPA	33472-1973	A-BLK	GC	PLR		M	R	1	2	3	4	5	6	7	8	9			12	13	14			SALEABLE			
KEY A, BLACK, W/O CPA	33472-1974	A-BLK	GC	PLR		M	R		2						8	9			12	13	14			SALEABLE			
KEY A, BLACK, W/O CPA	33472-1975	A-BLK	GC	PLR		M	R									9			12	13	14			SALEABLE			
KEY A, BLACK, W/O CPA	33472-1976	A-BLK	GC	PLR		M	R		2						8	9	10	11	12	13	14	15	16	SALEABLE			
KEY A, BLACK, W/O CPA	33472-1977	A-BLK	GC	PLR		M	R									9								SALEABLE			
KEY A, BLACK, W/O CPA	33472-1978	A-BLK	GC	PLR		M	R															15		SALEABLE			
KEY A, BLACK, W/O CPA	33472-1979	A-BLK	GC	PLR		M	R											11	12			15		SALEABLE			
KEY A, BLACK, W/O CPA	33472-1980	A-BLK	GC	PLR		M	R	1			4		6	7	8		10	11	12	13	14	15		SALEABLE			
KEY A, BLACK, W/O CPA	33472-1981	A-BLK	GC	PLR		M	R			3	4	5					10							SALEABLE			
KEY A, BLACK, W/O CPA	33472-1982	A-BLK	GC	PLR		M	R										10	11				15		SALEABLE			
KEY A, BLACK, W/O CPA	33472-1983	A-BLK	GC	PLR		M	R	1							8		10	11				15		SALEABLE			
KEY A, BLACK, W/O CPA	33472-1984	A-BLK	GC	PLR		M	R	1	2	3	4	5	6	7	8		10	11				15		SALEABLE			
KEY A, BLACK, W/O CPA	33472-1985	A-BLK	GC	PLR		M	R	1							8	9	10	11				15	16	SALEABLE			
KEY A, BLACK, W/O CPA	33472-1986	A-BLK	GC	PLR		M	R									9	10	11				15	16	SALEABLE			
KEY A, BLACK, W/O CPA	33472-1987	A-BLK	GC	PLR		M	R	1	2	3		5	6	7		9		11		13	14	15	16	SALEABLE			
KEY A, BLACK, W/O CPA	33472-1988	A-BLK	GC	PLR		M	R		2				6	7		9	10	11		13	14	15	16	SALEABLE			
KEY A, BLACK, W/O CPA	33472-1989	A-BLK	GC	PLR		M	R													13			16	SALEABLE			
KEY A, BLACK, W/O CPA	33472-1990	A-BLK	GC	PLR		M	R											11	12	13			16	SALEABLE			
KEY A, BLACK, W/O CPA	33472-1991	A-BLK	GC	PLR		M	R	1																SALEABLE			
KEY A, BLACK, W/O CPA	33472-1992	A-BLK	GC	PLR		M	R						6					11	12	13	14			SALEABLE			
KEY A, BLACK, W/O CPA	33472-1993	A-BLK	GC	PLR		M	R			3	4	5	6	7		9							16	SALEABLE			
KEY A, BLACK, W/O CPA	33472-1994	A-BLK	GC	PLR		M	R		2		4	5	6			9	10		12	13	14		16	SALEABLE			
KEY A, BLACK, W/O CPA	33472-1995	A-BLK	GC	PLR		M	R		2		4	5	6	7		9	10		12	13	14		16	SALEABLE			
KEY A, BLACK, W/O CPA	33472-1996	A-BLK	GC	PLR		M	R	1	2				6	7	8	9	10				14	15	16	SALEABLE			
KEY A, BLACK, W/O CPA	33472-1997	A-BLK	GC	PLR		M	R	1	2					7	8	9	10					15	16	SALEABLE			
KEY A, BLACK, W/O CPA	33472-1998	A-BLK	GC	PLR		M	R			3	4	5	6	7	8			11	12	13	14	15	16	SALEABLE			
KEY A, BLACK, W/O CPA	33472-1999	A-BLK	GC	PLR		M	R							7	8							15	16	SALEABLE			
KEY A, BLACK, W/CPA	33472-8001	A-BLK	GC	PLR	CPA	M	R	1	2	3	4	5	6				10	11	12	13	14	15	16	SALEABLE			
KEY A, BLACK, W/CPA	33472-8002	A-BLK	GC	PLR	CPA	M	R										10			13	14	15	16	SALEABLE			
KEY A, BLACK, W/CPA	33472-8003	A-BLK	GC	PLR	CPA	M	R	1	2	3	4	5	6					11	12					SALEABLE			
KEY A, BLACK, W/O CPA	33472-8004	A-BLK	GC	PLR		M	R		2			5		7		9		11					16	SALEABLE			
KEY A, BLACK, WITH CLIPSLOT, W/O CPA	33472-3001	A-BLK-CLIP	GC	PLR		M	R																	DESIGN RELEASE			
KEY B, LIGHT GRAY, WITH CLIPSLOT, W/O CPA	33472-3002	B-LG-CLIP	GC	PLR		M	R																	DESIGN RELEASE			
KEY C, DARK GRAY, WITH CLIPSLOT, W/O CPA	33472-3003	C-DG-CLIP	GC	PLR		M	R																	DESIGN RELEASE			
KEY D, STONE GRAY, WITH CLIPSLOT, W/O CPA	33472-3004	D-SG-CLIP	GC	PLR		M	R																	DESIGN RELEASE			
KEY A, BLACK, WITH CLIPSLOT, W/CPA	33472-3005	A-BLK-CLIP	GC	PLR	CPA	M	R																	DESIGN RELEASE			
KEY B, LIGHT GRAY, WITH CLIPSLOT, W/CPA	33472-3006	B-LG-CLIP	GC	PLR	CPA	M	R																	DESIGN RELEASE			
KEY C, DARK GRAY, WITH CLIPSLOT, W/CPA	33472-3007	C-DG-CLIP	GC	PLR	CPA	M	R																	DESIGN RELEASE			
KEY D, STONE GRAY, WITH CLIPSLOT, W/CPA	33472-3008	D-SG-CLIP	GC	PLR	CPA	M	R																	DESIGN RELEASE			
KEY A, BLACK, WITH CLIPSLOT, W/O CPA	33472-3009	A-BLK-CLIP	GC	PLR		M	R														14	15	16	DESIGN RELEASE			

molex

MX150 RECEPTACLE 2X10 SEALED ASSEMBLY MAT SEAL
BOM AND PIN OUT SHEET

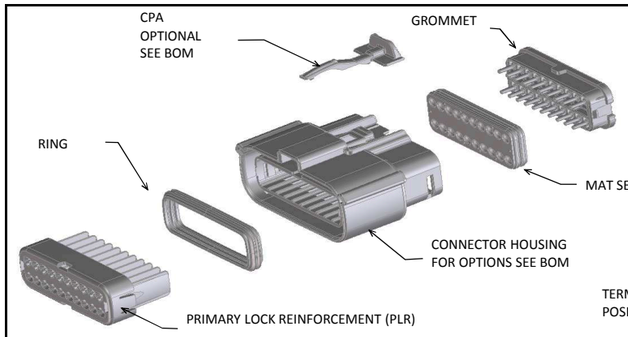

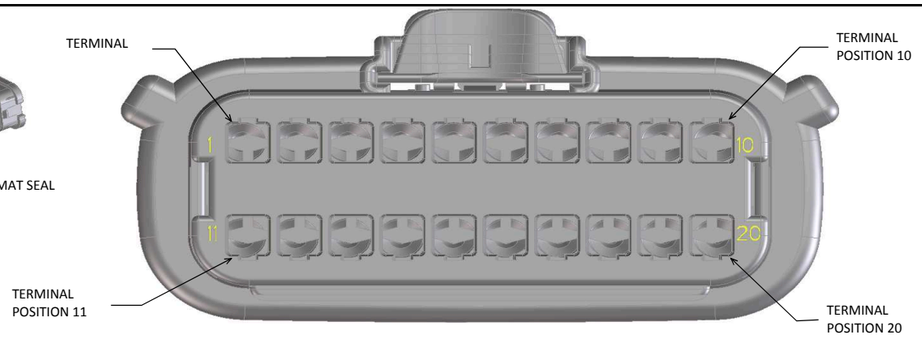

ABBREVIATION	DESCRIPTION	COLOR	MATERIAL
A-BLK	HOUSING, KEYING OPTION A	BLACK	SPS/NYLON GF20
B-LG	HOUSING, KEYING OPTION B	LIGHT GRAY	SPS/NYLON GF20
C-BR	HOUSING, KEYING OPTION C	BROWN	SPS/NYLON GF20
D-GR	HOUSING, KEYING OPTION D	GREEN	SPS/NYLON GF20
C-DG	HOUSING, KEYING OPTION C	DARK GRAY	SPS/NYLON GF20
D-SG	HOUSING, KEYING OPTION D	STONE GRAY	SPS/NYLON GF20
A-YW	HOUSING, KEYING OPTION A	YELLOW	SPS/NYLON GF20
GCP	GROMMET CAP (PLUGGED)	BLACK	SPS/NYLON GF20
GCO	GROMMET CAP (OPEN	BLACK	SPS/NYLON GF20
PLR	PLR	NATURAL	SPS/NYLON GF20
CPA	CPA	RED	PBT GF30
M	MAT SEAL	LIGHT BLUE	INHERENTLY LUBRICATED SILICONE
R	RING SEAL	GREEN	INHERENTLY LUBRICATED SILICONE

FOR ADDITIONAL INFORMATION SEE SD-33472-0001

ASSEMBLY DESCRIPTION	ASSEMBLY PART NUMBER	COMPONENT						BLOCKED TERMINALS																			STATUS	COMMENTS	OPTIONAL ATTATCHMENTS SOLD SEPERATELY	
		THE PRESENCE OF AN ABBREVIATION INDICATES THE PRESENCE OF THAT COMPONENT.						CAVITY WITH A NUMBER INDICATES BLOCKED TERMINAL POSITION CAVITY WITHOUT A NUMBER INDICATES OPEN TERMINAL POSITION																						
		HOUSING KEY/COLOR	GROMMET CAP	PLR	CPA	MAT SEAL	RING SEAL	1	2	3	4	5	6	7	8	9	10	11	12	13	14	15	16	17	18	19	20			BACKSHELL WITH RIBS	BACKSHELL WITHOUT RIBS
KEY A, BLACK, W/O CPA	33472-2001	A-BLK	GCO	PLR		M	R																					SALEABLE			
KEY B, LIGHT GRAY, W/O CPA	33472-2002	B-LG	GCO	PLR		M	R																					SALEABLE			
KEY C, BROWN, W/O CPA	33472-2003	C-BR	GCO	PLR		M	R																					NOT RECOMMENDED	SEE 33472-2060		
KEY D, GREEN, W/O CPA	33472-2004	D-GR	GCO	PLR		M	R																					NOT RECOMMENDED	SEE 33472-2061		
VOID KEY	33472-2005																														
KEY A, BLACK, W/CPA	33472-2006	A-BLK	GCO	PLR	CPA	M	R																					SALEABLE			
KEY B, LIGHT GRAY, W/CPA	33472-2007	B-LG	GCO	PLR	CPA	M	R																					SALEABLE			
KEY C, BROWN, W/CPA	33472-2008	C-BR	GCO	PLR	CPA	M	R																					NOT RECOMMENDED	SEE 33472-2062		
KEY D, GREEN, W/CPA	33472-2009	D-GR	GCO	PLR	CPA	M	R																					NOT RECOMMENDED	SEE 33472-2063		
VOID KEY	33472-2010																														
KEY A, BLACK, W/CPA	33472-2011	A-BLK	GCP	PLR	CPA	M	R																				20	SALEABLE			
KEY A, BLACK, W/O CPA	33472-2012	A-BLK	GCP	PLR		M	R											11										SALEABLE			
KEY A, BLACK, W/O CPA	33472-2013	A-BLK	GCP	PLR		M	R				4	5	6	7							14	15	16	17				SALEABLE			
KEY A, BLACK, W/O CPA	33472-2014	A-BLK	GCP	PLR		M	R							7									16					SALEABLE			
KEY A, BLACK, W/CPA	33472-2015	A-BLK	GCP	PLR	CPA	M	R		2							9			12			15				19		SALEABLE			
KEY A, BLACK, W/CPA	33472-2016	A-BLK	GCP	PLR	CPA	M	R			3						9				13						19		SALEABLE			
KEY A, BLACK, W/CPA	33472-2017	A-BLK	GCP	PLR	CPA	M	R									9		11		13		15	16					SALEABLE			
KEY A, BLACK, W/CPA	33472-2018	A-BLK	GCP	PLR	CPA	M	R										10	11	12								20	SALEABLE			
KEY A, BLACK, W/CPA	33472-2019	A-BLK	GCP	PLR	CPA	M	R	1	2																		20	SALEABLE			
KEY A, BLACK, W/CPA	33472-2020	A-BLK	GCP	PLR	CPA	M	R	1	2								10	11	12								20	SALEABLE			
KEY A, BLACK, W/CPA	33472-2021	A-BLK	GCP	PLR	CPA	M	R	1	2								10	11	12	13	14						20	SALEABLE			
KEY A, BLACK, W/CPA	33472-2022	A-BLK	GCP	PLR	CPA	M	R																16		18			SALEABLE			
KEY A, BLACK, W/CPA	33472-2023	A-BLK	GCP	PLR	CPA	M	R																		18	19	20	SALEABLE			
KEY A, BLACK, W/CPA	33472-2024	A-BLK	GCP	PLR	CPA	M	R		2																18	19	20	SALEABLE			
KEY A, BLACK, W/CPA	33472-2025	A-BLK	GCP	PLR	CPA	M	R			3	4	5						11					16	17				SALEABLE			
KEY A, BLACK, W/CPA	33472-2026	A-BLK	GCP	PLR	CPA	M	R			3	4						10				14					19		SALEABLE			
KEY A, BLACK, W/CPA	33472-2027	A-BLK	GCP	PLR	CPA	M	R			3	4	5					10				14					19		SALEABLE			
KEY A, BLACK, W/CPA	33472-2028	A-BLK	GCP	PLR	CPA	M	R			3	4	5						11			14		16	17	18	19	20	SALEABLE			
KEY A, BLACK, W/CPA	33472-2029	A-BLK	GCP	PLR	CPA	M	R			3	4	5						11			14		16	17		19		SALEABLE			
KEY A, BLACK, W/CPA	33472-2030	A-BLK	GCP	PLR	CPA	M	R			3	4	5					10				14			17		19		SALEABLE			
KEY A, BLACK, W/CPA	33472-2031	A-BLK	GCP	PLR	CPA	M	R			3	4						10				14			17		19		SALEABLE			
KEY A, BLACK, W/CPA	33472-2032	A-BLK	GCP	PLR	CPA	M	R										10		12	13	14					19		SALEABLE			
KEY A, BLACK, W/CPA	33472-2033	A-BLK	GCP	PLR	CPA	M	R			3	4							11			14		16	17		19		SALEABLE			
KEY A, BLACK, W/CPA	33472-2034	A-BLK	GCP	PLR	CPA	M	R											11										SALEABLE			
KEY A, BLACK, W/CPA	33472-2035	A-BLK	GCP	PLR	CPA	M	R	1	2								10	11	12	13	14	15					20	SALEABLE			
KEY A, BLACK, W/CPA	33472-2036	A-BLK	GCP	PLR	CPA	M	R	1	2								10	11	12			15					20	SALEABLE			
KEY A, BLACK, W/CPA	33472-2037	A-BLK	GCP	PLR	CPA	M	R										10	11	12	13	14	15					20	SALEABLE			
KEY A, BLACK, W/CPA	33472-2038	A-BLK	GCP	PLR	CPA	M	R										10	11	12	13	14						20	SALEABLE			
KEY A, BLACK, W/CPA	33472-2039	A-BLK	GCP	PLR	CPA	M	R										10	11	12			15					20	SALEABLE			
KEY A, BLACK, W/CPA	33472-2040	A-BLK	GCP	PLR	CPA	M	R			3							10	11	12			15	16	17			20	SALEABLE			
KEY A, BLACK, W/CPA	33472-2041	A-BLK	GCP	PLR	CPA	M	R			3	4	5					10	11	12			15	16	17			20	SALEABLE			
KEY A, BLACK, W/CPA	33472-2042	A-BLK	GCP	PLR	CPA	M	R			3												15	16	17			20	SALEABLE			
KEY A, BLACK, W/CPA	33472-2043	A-BLK	GCP	PLR	CPA	M	R	1	2	3	4	5										15	16	17			20	SALEABLE			
KEY A, BLACK, W/CPA	33472-2044	A-BLK	GCP	PLR	CPA	M	R	1	2	3	4	5															20	SALEABLE			
KEY A, BLACK, W/CPA	33472-2045	A-BLK	GCP	PLR	CPA	M	R	1	2	3	4	5								13	14						20	SALEABLE			
KEY A, BLACK, W/CPA	33472-2046	A-BLK	GCP	PLR	CPA	M	R	1	2	3	4	5								13	14	15	16	17			20	SALEABLE			
KEY A, BLACK, W/CPA	33472-2047	A-BLK	GCP	PLR	CPA	M	R			3	4	5										15	16	17			20	SALEABLE			
KEY A, BLACK, W/CPA	33472-2048	A-BLK	GCP	PLR	CPA	M	R			3	4	5															20	SALEABLE			
KEY A, BLACK, W/CPA	33472-2049	A-BLK	GCP	PLR	CPA	M	R			3	4	5								13	14						20	SALEABLE			
KEY A, BLACK, W/CPA	33472-2050	A-BLK	GCP	PLR	CPA	M	R			3	4	5								13	14	15	16	17			20	SALEABLE			
KEY A, BLACK, W/CPA	33472-2051	A-BLK	GCP	PLR	CPA	M	R	1	2	3										13	14	15	16	17			20	SALEABLE			
KEY A, BLACK, W/CPA	33472-2052	A-BLK	GCP	PLR	CPA	M	R	1	2	3										13	14						20	SALEABLE			
KEY A, BLACK, W/CPA	33472-2053	A-BLK	GCP	PLR	CPA	M	R	1	2	3												15	16	17			20	SALEABLE			
KEY A, BLACK, W/CPA	33472-2054	A-BLK	GCP	PLR	CPA	M	R	1	2	3																	20	SALEABLE			
KEY A, BLACK, W/CPA	33472-2055	A-BLK	GCP	PLR	CPA	M	R			3										13	14						20	SALEABLE			
KEY A, BLACK, W/CPA	33472-2056	A-BLK	GCP	PLR	CPA	M	R			3																	20	SALEABLE			
KEY A, BLACK, W/O CPA	33472-2057	A-BLK	GCP	PLR		M	R			3	4						10				14			17		19		SALEABLE			
KEY A, BLACK, W/CPA	33472-2058	A-BLK	GCP	PLR	CPA	M	R													13	14	15					20	SALEABLE			
KEY A, BLACK, W/O CPA	33472-2059	A-BLK	GCP	PLR		M	R										10				14			17		19		SALEABLE			
KEY C, DARK GRAY, W/O CPA	33472-2060	C-DG	GCO	PLR		M	R																					SALEABLE			
KEY D, STONE GRAY, W/O CPA	33472-2061	D-SG	GCO	PLR		M	R																					SALEABLE			
KEY C, DARK GRAY, W/CPA	33472-2062	C-DG	GCO	PLR	CPA	M	R																					SALEABLE			
KEY D, STONE GRAY, W/CPA	33472-2063	D-SG	GCO	PLR	CPA	M	R																					SALEABLE			
KEY A, BLACK, W/O CPA	33472-2064	A-BLK	GCP	PLR		M	R										10				14			17	18	19		SALEABLE			
KEY A, BLACK, W/O CPA	33472-2065	A-BLK	GCP	PLR		M	R			3							10			13	14			17	18	19		SALEABLE			
KEY A, BLACK, W/O CPA	33472-2066	A-BLK	GCP	PLR		M	R			3							10			13	14			17	18	19	20	SALEABLE			
KEY A, BLACK, W/O CPA	33472-2067	A-BLK	GCP	PLR		M	R				4	5					10				14	15		17		19		SALEABLE			
KEY A, BLACK, W/O CPA	33472-2068	A-BLK	GCP	PLR		M	R				4	5					10				14	15		17	18	19		SALEABLE			
KEY A, BLACK, W/O CPA	33472-2069	A-BLK	GCP	PLR		M	R				4	5					10				14	15		17	18	19	20	SALEABLE			
KEY A, BLACK, W/O CPA	33472-2070	A-BLK	GCP	PLR		M	R			3			6	7			10			13	14			17	18	19	20	SALEABLE			
KEY A, BLACK, W/O CPA	33472-2071	A-BLK	GCP	PLR		M	R				4			7									14					SALEABLE			
KEY A, BLACK, W/O CPA	33472-2072	A-BLK	GCP	PLR		M	R		2	3	4	5	6	7					12	13	14	15	16	17				SALEABLE			
KEY A, BLACK, W/O CPA	33472-2073	A-BLK	GCP	PLR		M	R			3	4	5								13		15			18	19		SALEABLE			
KEY A, BLACK, W/O CPA	33472-2074	A-BLK	GCP	PLR		M	R				4	5	6	7									16	17				SALEABLE			
KEY A, BLACK, W/O CPA	33472-2075	A-BLK	GCP	PLR		M	R	1	2	3	4	5	6		8		10							17	18	19	20	SALEABLE			
KEY A, BLACK, W/O CPA	33472-2076	A-BLK	GCP	PLR		M	R																	17	18	19	20	SALEABLE			
KEY A, BLACK, W/O CPA	33472-2077	A-BLK	GCP	PLR		M	R	1	2	3	4	5	6	7	8	9	10						16	17	18	19	20	SALEABLE			

molex

MX150 RECEPTACLE 2X10 SEALED ASSEMBLY MAT SEAL
BOM AND PIN OUT SHEET

ASSEMBLY DESCRIPTION	ASSEMBLY PART NUMBER	COMPONENT						BLOCKED TERMINALS																				STATUS	COMMENTS	OPTIONAL ATTATCHMENTS SOLD SEPERATELY	
		THE PRESENCE OF AN ABBREVIATION INDICATES THE PRESENCE OF THAT COMPONENT.						CAVITY WITH A NUMBER INDICATES BLOCKED TERMINAL POSITION CAVITY WITHOUT A NUMBER INDICATES OPEN TERMINAL POSITION																							
		HOUSING KEY/COLOR	GROMMET CAP	PLR	CPA	MAT SEAL	RING SEAL	1	2	3	4	5	6	7	8	9	10	11	12	13	14	15	16	17	18	19	20			BACKSHELL WITH RIBS	BACKSHELL WITHOUT RIBS
KEY A, BLACK, W/O CPA	33472-2078	A-BLK	GCP	PLR		M	R	1	2	3	4	5	6		8		10						16	17	18	19	20	SALEABLE			
KEY A, BLACK, W/O CPA	33472-2079	A-BLK	GCP	PLR		M	R		2						8								16	17	18	19	20	SALEABLE			
KEY A, BLACK, W/O CPA	33472-2080	A-BLK	GCP	PLR		M	R																16	17	18	19	20	SALEABLE			
KEY A, BLACK, W/O CPA	33472-2081	A-BLK	GCP	PLR		M	R	1	2	3	4	5	6	7	8	9	10							17	18	19	20	SALEABLE			
KEY A, BLACK, W/O CPA	33472-2082	A-BLK	GCP	PLR		M	R							7		9								17	18	19	20	SALEABLE			
KEY A, BLACK, W/O CPA	33472-2083	A-BLK	GCP	PLR		M	R										10							17		19		SALEABLE			
KEY A, BLACK, W/O CPA	33472-2084	A-BLK	GCP	PLR		M	R	1	2	3	4	5	6	7	8		10							17		19		SALEABLE			
KEY A, BLACK, W/O CPA	33472-2085	A-BLK	GCP	PLR		M	R	1	2	3	4	5	6	7	8	9	10		12					17		19		SALEABLE			
KEY A, BLACK, W/O CPA	33472-2086	A-BLK	GCP	PLR		M	R	1	2	3	4	5	6	7	8	9	10				14	15		17	18	19	20	SALEABLE			
KEY A, BLACK, W/O CPA	33472-2087	A-BLK	GCP	PLR		M	R							7		9					14	15		17	18	19	20	SALEABLE			
KEY A, BLACK, W/O CPA	33472-2088	A-BLK	GCP	PLR		M	R							7										17			20	SALEABLE			
KEY A, YELLOW, W/CPA	33472-2089	A-YW	GCO	PLR	CPA	M	R																					SALEABLE			
KEY A, BLACK, W/O CPA	33472-2090	A-BLK	GCP	PLR		M	R																				20	SALEABLE			
KEY A, BLACK, W/O CPA	33472-2091	A-BLK	GCP	PLR		M	R		2													15	16					SALEABLE			
KEY A, BLACK, W/CPA	33472-2092	A-BLK	GCP	PLR	CPA	M	R							7									16					SALEABLE			
KEY A, YELLOW, W/O CPA	33472-2093	A-YW	GCO	PLR		M	R																					SALEABLE			
KEY A, BLACK, W/O CPA	33472-2094	A-BLK	GCP	PLR		M	R				4						10	11	12	13	14	15	16		18	19	20	SALEABLE			
KEY A, BLACK, W/CPA	33472-2095	A-BLK	GCP	PLR	CPA	M	R																		18	19		SALEABLE			
KEY A, BLACK, W/CPA	33472-2096	A-BLK	GCP	PLR	CPA	M	R		2		4							11	12		14							SALEABLE			
KEY A, BLACK, W/CPA	33472-2097	A-BLK	GCP	PLR	CPA	M	R									9	10											SALEABLE			
KEY A, BLACK, W/CPA	33472-2098	A-BLK	GCP	PLR	CPA	M	R	1											12			15	16	17	18	19	20	SALEABLE			
KEY A, BLACK, W/CPA	33472-2099	A-BLK	GCP	PLR	CPA	M	R	1	2	3	4	5	6	7	8	9		11	12	13	14	15	16		18	19	20	SALEABLE			
KEY A, BLACK, W/CPA	33472-2100	A-BLK	GCP	PLR	CPA	M	R			3	4	5	6		8	9									18	19	20	SALEABLE			
KEY A, BLACK, W/CPA	33472-2101	A-BLK	GCP	PLR	CPA	M	R	1	2	3	4	5	6					11	12	13	14	15	16	17	18	19	20	SALEABLE			
KEY A, BLACK, W/O CPA	33472-2102	A-BLK	GCP	PLR		M	R										10				14			17	18	19	20	SALEABLE			
KEY A, BLACK, W/CPA	33472-2103	A-BLK	GCP	PLR	CPA	M	R			3	4	5	6		8	9	10				14					19		SALEABLE			
KEY A, BLACK, W/CPA	33472-2104	A-BLK	GCP	PLR	CPA	M	R			3					8	9									18	19	20	SALEABLE			
KEY A, BLACK, W/O CPA	33472-2105	A-BLK	GCP	PLR		M	R									9				13	14			17	18	19	20	SALEABLE			
KEY B, LIGHT GRAY, W/O CPA	33472-2106	B-LG	GCP	PLR		M	R						6	7	8								16					SALEABLE			
KEY B, LIGHT GRAY, W/O CPA	33472-2107	B-LG	GCP	PLR		M	R								8								16					SALEABLE			
KEY B, LIGHT GRAY, W/O CPA	33472-2108	B-LG	GCP	PLR		M	R						6	7		9	10											SALEABLE			
KEY B, LIGHT GRAY, W/O CPA	33472-2109	B-LG	GCP	PLR		M	R			3		5	6	7		9	10											SALEABLE			
KEY B, LIGHT GRAY, W/O CPA	33472-2110	B-LG	GCP	PLR		M	R			3		5				9	10											SALEABLE			
KEY B, LIGHT GRAY, W/O CPA	33472-2111	B-LG	GCP	PLR		M	R			3	4	5				9	10											SALEABLE			
KEY B, LIGHT GRAY, W/O CPA	33472-2112	B-LG	GCP	PLR		M	R			3	4	5				9	10					15		17	18	19	20	SALEABLE			
KEY B, LIGHT GRAY, W/O CPA	33472-2113	B-LG	GCP	PLR		M	R			3	4	5	6	7		9	10					15		17	18	19	20	SALEABLE			
KEY B, LIGHT GRAY, W/CPA	33472-2114	B-LG	GCP	PLR	CPA	M	R			3	4	5	6		8	9	10				14					19		SALEABLE			
KEY A, YELLOW, W/CPA	33472-2115	A-YW	GCP	PLR	CPA	M	R			3			6	7	8	9	10	11	12	13	14				18			SALEABLE			
KEY A, YELLOW, W/CPA	33472-2116	A-YW	GCP	PLR	CPA	M	R			3			6	7	8	9	10		12	13	14							SALEABLE			
KEY A, YELLOW, W/CPA	33472-2117	A-YW	GCP	PLR	CPA	M	R			3				7			10				14	15						SALEABLE			
KEY A, YELLOW, W/CPA	33472-2118	A-YW	GCP	PLR	CPA	M	R			3	4	5	6	7	8	9	10	11	12	13	14	15	16	17	18	19	20	SALEABLE			
KEY A, YELLOW, W/CPA	33472-2119	A-YW	GCP	PLR	CPA	M	R			3	4	5	6	7	8	9	10	11	12	13	14				18			SALEABLE			
KEY A, YELLOW, W/CPA	33472-2120	A-YW	GCP	PLR	CPA	M	R			3				7	8	9	10				14							SALEABLE			
KEY A, BLACK, W/CPA	33472-2121	A-BLK	GCP	PLR	CPA	M	R											11	12	13	14	15	16	17	18	19	20	SALEABLE			
KEY A, BLACK, W/CPA	33472-2122	A-BLK	GCP	PLR	CPA	M	R		2	3	4	5									14			17	18	19	20	SALEABLE			
KEY A, BLACK, W/O CPA	33472-2123	A-BLK	GCP	PLR		M	R								8							15						SALEABLE			
KEY A, BLACK, W/O CPA	33472-2124	A-BLK	GCP	PLR		M	R											11						17		19		SALEABLE			
KEY A, BLACK, W/O CPA	33472-2125	A-BLK	GCP	PLR		M	R	1	2	3	4	5	6	7	8			11						17		19		SALEABLE			
KEY A, BLACK, W/CPA	33472-2126	A-BLK	GCP	PLR	CPA	M	R	1							8	9		11								19	20	SALEABLE			
KEY A, BLACK, W/CPA	33472-2127	A-BLK	GCP	PLR	CPA	M	R	1							8		10					15		17				SALEABLE			
KEY A, BLACK, W/O CPA	33472-2128	A-BLK	GCP	PLR		M	R	1							8		10					15		17				SALEABLE			
KEY A, BLACK, W/O CPA	33472-2129	A-BLK	GCP	PLR		M	R	1							8	9		11								19	20	SALEABLE			
KEY A, BLACK, W/CPA	33472-2130	A-BLK	GCP	PLR	CPA	M	R	1							8		10			13	14	15		17				SALEABLE			
KEY A, BLACK, W/O CPA	33472-2131	A-BLK	GCP	PLR		M	R				4										14							SALEABLE			
KEY A, BLACK, W/O CPA	33472-2132	A-BLK	GCP	PLR		M	R				4	5	6	7	8	9	10				14	15	16	17	18	19	20	SALEABLE			
KEY A, BLACK, W/O CPA	33472-2133	A-BLK	GCP	PLR		M	R	1	2	3	4	5	6	7	8	9	10	11	12	13	14	15	16	17	18	19	20	SALEABLE			
KEY A, BLACK, W/O CPA	33472-2134	A-BLK	GCP	PLR		M	R	1								9			12									SALEABLE			
KEY A, BLACK, W/O CPA	33472-2135	A-BLK	GCP	PLR		M	R	1																		19		SALEABLE			
KEY A, BLACK, W/O CPA	33472-2136	A-BLK	GCP	PLR		M	R	1	2	3	4	5	6	7	8	9	10	11	12	13	14	15	16			19	20	SALEABLE			
KEY A, BLACK, W/O CPA	33472-2137	A-BLK	GCP	PLR		M	R	1											12	13						19		SALEABLE			
KEY A, BLACK, W/CPA	33472-2138	A-BLK	GCP	PLR	CPA	M	R									9	10		12	13	14	15	16	17				SALEABLE			
KEY A, BLACK, W/O CPA	33472-2139	A-BLK	GCP	PLR		M	R	1	2	3	4	5	6		8		10			13			16			19	20	SALEABLE			
KEY A, BLACK, W/O CPA	33472-2140	A-BLK	GCP	PLR		M	R		2						8					13			16			19	20	SALEABLE			
KEY A, BLACK, W/O CPA	33472-2141	A-BLK	GCP	PLR		M	R													13			16			19	20	SALEABLE			
KEY B, LIGHT GRAY, W/O CPA	33472-2142	B-LG	GCP	PLR		M	R	1	2	3	4	5	6	7	8			11						17		19		SALEABLE			
KEY B, LIGHT GRAY, W/O CPA	33472-2143	B-LG	GCP	PLR		M	R											11						17		19		SALEABLE			
KEY A, BLACK, W/O CPA	33472-2144	A-BLK	GCP	PLR		M	R	1	2	3	4	5		7	8								16			19		SALEABLE			
KEY A, BLACK, W/O CPA	33472-2145	A-BLK	GCP	PLR		M	R	1	2	3				7			10						16			19		SALEABLE			
KEY A, BLACK, W/CPA	33472-2146	A-BLK	GCP	PLR	CPA	M	R	1								9			12									SALEABLE			
KEY A, BLACK, W/O CPA	33472-2147	A-BLK	GCP	PLR		M	R	1	2	3	4	5		7	8					13	14	15	16			19	20	SALEABLE			
KEY A, BLACK, W/O CPA	33472-2148	A-BLK	GCP	PLR		M	R	1	2	3				7			10			13	14	15	16			19	20	SALEABLE			
KEY A, BLACK, W/CPA	33472-2149	A-BLK	GCP	PLR	CPA	M	R										10									19	20	SALEABLE			
KEY A, BLACK, W/CPA	33472-2150	A-BLK	GCP	PLR	CPA	M	R							7		9	10						16					SALEABLE			
KEY A, BLACK, W/CPA	33472-2151	A-BLK	GCP	PLR	CPA	M	R	1	2	3	4					9	10			13	14			17	18	19	20	SALEABLE			
KEY A, BLACK, W/O CPA	33472-2152	A-BLK	GCP	PLR		M	R	1	2	3	4	5		7	8	9							16	17	18	19	20	SALEABLE			
KEY A, BLACK, W/O CPA	33472-2153	A-BLK	GCP	PLR		M	R				4	5	6						12			15	16	17	18	19		SALEABLE			
KEY A, BLACK, W/O CPA	33472-2154	A-BLK	GCP	PLR		M	R	1				5	6	7	8				12	13		15				19		SALEABLE			
KEY A, BLACK, W/CPA	33472-2155	A-BLK	GCP	PLR	CPA	M	R	1	2	3	4	5	6										16	17	18	19	20	SALEABLE			
KEY A, BLACK, W/CPA	33472-2156	A-BLK	GCP	PLR	CPA	M	R																16	17	18	19	20	SALEABLE			
KEY A, BLACK, W/CPA	33472-2157	A-BLK	GCP	PLR	CPA	M	R									9				13	14			17	18	19	20	SALEABLE			
KEY A, BLACK, W/CPA	33472-2158	A-BLK	GCP	PLR	CPA	M	R	1	2	3	4	5	6		8		10							17	18	19	20	SALEABLE			
KEY B, LIGHT GRAY, W/CPA	33472-2159	B-LG	GCP	PLR	CPA	M	R									9	10	11				15	16	17			20	SALEABLE			
KEY B, LIGHT GRAY, W/CPA	33472-2160	B-LG	GCP	PLR	CPA	M	R				4	5	6			9	10	11			14				18			SALEABLE			
KEY B, LIGHT GRAY, W/CPA	33472-2161	B-LG	GCP	PLR	CPA	M	R				4	5	6	7			10								18			SALEABLE			
KEY B, LIGHT GRAY, W/CPA	33472-2162	B-LG	GCP	PLR	CPA	M	R				4	5	6			9	10	11									20	SALEABLE			
KEY B, LIGHT GRAY, W/CPA	33472-2163	B-LG	GCP	PLR	CPA	M	R				4	5	6								14					19	20	SALEABLE			
KEY A, BLACK, W/CPA	33472-2164	A-BLK	GCP	PLR	CPA	M	R									9	10			13	14			17	18	19	20	SALEABLE			
KEY A, BLACK, W/O CPA	33472-2165	A-BLK	GCP	PLR		M	R			3	4	5	6						12			15	16	17	18	19		SALEABLE			
KEY A, BLACK, W/CPA	33472-2167	A-BLK	GCP	PLR	CPA	M	R													13						19	20	SALEABLE			
KEY A, BLACK, W/O CPA	33472-2168	A-BLK	GCP	PLR		M	R		2						8		10							17		19		SALEABLE			
KEY A, BLACK, W/O CPA	33472-2169	A-BLK	GCP	PLR		M	R																16					SALEABLE			
KEY A, BLACK, W/O CPA	33472-2170	A-BLK	GCP	PLR		M	R	1	2	3	4	5		7	8								16			19	20	SALEABLE			
KEY A, BLACK, W/O CPA	33472-2171	A-BLK	GCP	PLR		M	R	1	2	3				7			10						16			19	20	SALEABLE			
KEY A, BLACK, W/O CPA	33472-2172	A-BLK	GCP	PLR		M	R	1	2	3	4	5	6		8		10				14	15		17	18	19	20	SALEABLE			
KEY A, BLACK, W/O CPA	33472-2173	A-BLK	GCP	PLR		M	R														14	15		17	18	19	20	SALEABLE			
KEY A, BLACK, W/O CPA	33472-2174	A-BLK	GCP	PLR		M	R		2						8									17	18	19	20	SALEABLE			
KEY A, BLACK, W/O CPA	33472-2175	A-BLK	GCP	PLR		M	R	1	2	3	4	5	6		8		10				14	15			18		20	SALEABLE			
KEY A, BLACK, W/O CPA	33472-2176	A-BLK	GCP	PLR		M	R	1	2	3	4	5	6		8		10								18		20	SALEABLE			
KEY A, BLACK, W/O CPA	33472-2177	A-BLK	GCP	PLR		M	R														14	15			18		20	SALEABLE			
KEY A, BLACK, W/O CPA	33472-2178	A-BLK	GCP	PLR		M	R																		18		20	SALEABLE			
KEY A, BLACK, W/O CPA	33472-2179	A-BLK	GCP	PLR		M	R	1	2	3	4	5	6													19	20	SALEABLE			
KEY A, BLACK, W/O CPA	33472-2180	A-BLK	GCP	PLR		M	R						6														20	SALEABLE			
KEY A, BLACK, W/CPA	33472-2181	A-BLK	GCP	PLR	CPA	M	R	1		3		5		7		9			12		14		16		18		20	SALEABLE			
KEY A, BLACK, W/CPA	33472-2182	A-BLK	GCP	PLR	CPA	M	R		2		4		6		8		10	11		13		15		17		19		SALEABLE			
KEY A, BLACK, W/O CPA	33472-2183	A-BLK	GCP	PLR		M	R														14	15	16					SALEABLE			

molex

MX150 RECEPTACLE 2X10 SEALED ASSEMBLY MAT SEAL
BOM AND PIN OUT SHEET

ASSEMBLY DESCRIPTION	ASSEMBLY PART NUMBER	COMPONENT						BLOCKED TERMINALS																				STATUS	COMMENTS	OPTIONAL ATTATCHMENTS SOLD SEPERATELY	
		THE PRESENCE OF AN ABBREVIATION INDICATES THE PRESENCE OF THAT COMPONENT.						CAVITY WITH A NUMBER INDICATES BLOCKED TERMINAL POSITION CAVITY WITHOUT A NUMBER INDICATES OPEN TERMINAL POSITION																							
		HOUSING KEY/COLOR	GROMMET CAP	PLR	CPA	MAT SEAL	RING SEAL	1	2	3	4	5	6	7	8	9	10	11	12	13	14	15	16	17	18	19	20			BACKSHELL WITH RIBS	BACKSHELL WITHOUT RIBS
KEY A, BLACK, W/O CPA	33472-2184	A-BLK	GCP	PLR		M	R		2						8								16					SALEABLE			
KEY A, BLACK, W/O CPA	33472-2185	A-BLK	GCP	PLR		M	R	1	2	3	4	5	6		8		10						16					SALEABLE			
KEY A, BLACK, W/O CPA	33472-2186	A-BLK	GCP	PLR		M	R		2						8						14	15	16					SALEABLE			
KEY A, BLACK, W/O CPA	33472-2187	A-BLK	GCP	PLR		M	R	1	2	3	4	5	6		8		10				14	15	16					SALEABLE			
KEY A, BLACK, W/O CPA	33472-2188	A-BLK	GCP	PLR		M	R														14	15	16	17	18	19	20	SALEABLE			
KEY A, BLACK, W/O CPA	33472-2189	A-BLK	GCP	PLR		M	R		2						8								16	17	18	19	20	SALEABLE			
KEY A, BLACK, W/O CPA	33472-2190	A-BLK	GCP	PLR		M	R	1	2	3	4	5	6		8		10				14	15	16	17	18	19	20	SALEABLE			
KEY A, BLACK, W/CPA	33472-2191	A-BLK	GCP	PLR	CPA	M	R							7		9							16					SALEABLE			
KEY A, BLACK, W/O CPA	33472-2192	A-BLK	GCP	PLR		M	R										10				14	15		17		19		SALEABLE			
KEY A, BLACK, W/O CPA	33472-2193	A-BLK	GCP	PLR		M	R		2						8						14	15	16	17	18	19	20	SALEABLE			
KEY A, BLACK, W/O CPA	33472-2194	A-BLK	GCP	PLR		M	R			3	4	5	6	7	8	9	10			13	14			17	18	19	20	SALEABLE			
KEY A, BLACK, W/O CPA	33472-2195	A-BLK	GCP	PLR		M	R			3	4	5	6	7	8	9	10			13	14			17	18	19		SALEABLE			
KEY A, BLACK, W/O CPA	33472-2196	A-BLK	GCP	PLR		M	R																16				20	SALEABLE			
KEY A, BLACK, W/O CPA	33472-2197	A-BLK	GCP	PLR		M	R							7					12					17			20	SALEABLE			
KEY A, BLACK, W/O CPA	33472-2198	A-BLK	GCP	PLR		M	R			3													16	17	18	19	20	SALEABLE			
KEY A, BLACK, W/O CPA	33472-2199	A-BLK	GCP	PLR		M	R		2						8													SALEABLE			
KEY A, BLACK, W/O CPA	33472-2200	A-BLK	GCP	PLR		M	R	1	2	3	4	5	6		8		10				14	15						SALEABLE			
KEY A, BLACK, W/O CPA	33472-2201	A-BLK	GCP	PLR		M	R		2						8						14	15						SALEABLE			
KEY A, BLACK, W/O CPA	33472-2202	A-BLK	GCP	PLR		M	R														14	15						SALEABLE			
KEY B, LIGHT GRAY, W/O CPA	33472-2203	B-LG	GCP	PLR		M	R		2	3						9			12	13						19		SALEABLE			
KEY B, LIGHT GRAY, W/O CPA	33472-2204	B-LG	GCP	PLR		M	R	1	2	3	4	5			8	9	10		12	13	14	15			18	19	20	SALEABLE			
KEY B, LIGHT GRAY, W/CPA	33472-2205	B-LG	GCP	PLR	CPA	M	R											11				15	16	17			20	SALEABLE			
KEY B, LIGHT GRAY, W/CPA	33472-2206	B-LG	GCP	PLR	CPA	M	R											11				15	16	17				SALEABLE			
KEY A, BLACK, W/O CPA	33472-2207	A-BLK	GCP	PLR		M	R					5					10										20	SALEABLE			
KEY A, BLACK, W/O CPA	33472-2208	A-BLK	GCP	PLR		M	R					5					10								18	19	20	SALEABLE			
KEY A, BLACK, W/O CPA	33472-2209	A-BLK	GCP	PLR		M	R					5																SALEABLE			
KEY A, BLACK, W/O CPA	33472-2210	A-BLK	GCP	PLR		M	R										10										20	SALEABLE			
KEY A, BLACK, W/O CPA	33472-2211	A-BLK	GCP	PLR		M	R			3	4	5					10										20	SALEABLE			
KEY A, BLACK, W/O CPA	33472-2212	A-BLK	GCP	PLR		M	R			3	4	5																SALEABLE			
KEY A, BLACK, W/O CPA	33472-2213	A-BLK	GCP	PLR		M	R			3	4				8	9	10		12	13							20	SALEABLE			
KEY A, BLACK, W/O CPA	33472-2214	A-BLK	GCP	PLR		M	R			3	4						10										20	SALEABLE			
KEY A, BLACK, W/O CPA	33472-2215	A-BLK	GCP	PLR		M	R			3	4																	SALEABLE			
KEY B, LIGHT GRAY, W/O CPA	33472-2216	B-LG	GCP	PLR		M	R	1	2	3	4	5	6	7	8			11	12	13				17		19		SALEABLE			
KEY B, LIGHT GRAY, W/O CPA	33472-2217	B-LG	GCP	PLR		M	R											11	12	13				17		19		SALEABLE			
KEY A, BLACK, W/O CPA	33472-2218	A-BLK	GCP	PLR		M	R				4	5			8								16				20	SALEABLE			
KEY A, BLACK, W/O CPA	33472-2219	A-BLK	GCP	PLR		M	R										10	11	12				16				20	SALEABLE			
KEY A, BLACK, W/O CPA	33472-2220	A-BLK	GCP	PLR		M	R	1	2	3	4	5			8								16				20	SALEABLE			
KEY A, BLACK, W/O CPA	33472-2221	A-BLK	GCP	PLR		M	R	1	2	3							10	11	12				16				20	SALEABLE			
KEY A, BLACK, W/O CPA	33472-2222	A-BLK	GCP	PLR		M	R		2	3			6															SALEABLE			
KEY A, BLACK, W/O CPA	33472-2223	A-BLK	GCP	PLR		M	R		2	3														17	18			SALEABLE			
KEY A, BLACK, W/O CPA	33472-2224	A-BLK	GCP	PLR		M	R	1	2	3			6	7														SALEABLE			
KEY A, BLACK, W/O CPA	33472-2225	A-BLK	GCP	PLR		M	R	1	2	3	4	5	6		8		10											SALEABLE			
KEY A, BLACK, W/O CPA	33472-2226	A-BLK	GCP	PLR		M	R							7					12				16					SALEABLE			
KEY A, BLACK, W/O CPA	33472-2227	A-BLK	GCP	PLR		M	R	1	2	3	4	5	6	7	8				12	13	14	15		17	18	19	20	SALEABLE			
KEY A, BLACK, W/O CPA	33472-2228	A-BLK	GCP	PLR		M	R	1	2	3	4	5	6	7	8									17	18	19	20	SALEABLE			
KEY A, BLACK, W/O CPA	33472-2229	A-BLK	GCP	PLR		M	R												12	13	14	15		17	18	19	20	SALEABLE			
KEY A, BLACK, W/O CPA	33472-2230	A-BLK	GCP	PLR		M	R									9	10	11					16	17	18	19	20	SALEABLE			
KEY A, BLACK, W/O CPA	33472-2231	A-BLK	GCP	PLR		M	R	1	2	3	4	5	6	7	8	9	10	11					16	17	18	19	20	SALEABLE			
KEY A, BLACK, W/O CPA	33472-2232	A-BLK	GCP	PLR		M	R									9	10	11	12	13	14	15	16	17	18	19	20	SALEABLE			
KEY A, BLACK, W/O CPA	33472-2233	A-BLK	GCP	PLR		M	R																	17	18	19	20	SALEABLE			
KEY A, BLACK, W/O CPA	33472-2234	A-BLK	GCP	PLR		M	R		2	3			6															SALEABLE			
KEY A, BLACK, W/O CPA	33472-2235	A-BLK	GCP	PLR		M	R		2	3			6											17	18			SALEABLE			
KEY A, BLACK, W/O CPA	33472-2236	A-BLK	GCP	PLR		M	R			3	4	5	6	7			10										20	SALEABLE			
KEY A, BLACK, W/O CPA	33472-2237	A-BLK	GCP	PLR		M	R			3	4		6	7	8	9	10		12	13							20	SALEABLE			
KEY A, BLACK, W/O CPA	33472-2238	A-BLK	GCP	PLR		M	R			3	4		6	7			10										20	SALEABLE			
KEY A, BLACK, W/O CPA	33472-2239	A-BLK	GCP	PLR		M	R			3	4	5	6	7					12	13								SALEABLE			
KEY A, BLACK, W/O CPA	33472-2240	A-BLK	GCP	PLR		M	R					5													18	19		SALEABLE			
KEY A, BLACK, W/O CPA	33472-2241	A-BLK	GCP	PLR		M	R			3	4		6	7														SALEABLE			
KEY A, BLACK, W/O CPA	33472-2242	A-BLK	GCP	PLR		M	R					5	6	7								15	16					SALEABLE			
KEY B, LIGHT GRAY, W/O CPA	33472-2243	B-LG	GCP	PLR		M	R		2	3			6			9	10		12	13			16			19	20	SALEABLE			
KEY B, LIGHT GRAY, W/O CPA	33472-2244	B-LG	GCP	PLR		M	R		2	3			6			9	10		12	13			16		18	19	20	SALEABLE			
KEY B, LIGHT GRAY, W/O CPA	33472-2245	B-LG	GCP	PLR		M	R		2	3						9			12	13					18	19		SALEABLE			
KEY B, LIGHT GRAY, W/O CPA	33472-2246	B-LG	GCP	PLR		M	R	1	2	3					8	9	10		12	13					18	19	20	SALEABLE			
KEY B, LIGHT GRAY, W/O CPA	33472-2247	B-LG	GCP	PLR		M	R		2	3					8	9			12	13						19		SALEABLE			
KEY B, LIGHT GRAY, W/O CPA	33472-2248	B-LG	GCP	PLR		M	R		2	3					8	9			12	13					18	19		SALEABLE			
KEY B, LIGHT GRAY, W/O CPA	33472-2249	B-LG	GCP	PLR		M	R	1	2	3	4	5	6	7	8			11	12	13				17		19		SALEABLE			
KEY B, LIGHT GRAY, W/O CPA	33472-2250	B-LG	GCP	PLR		M	R											11	12	13				17		19		SALEABLE			
KEY A, BLACK, W/CPA	33472-2251	A-BLK	GCP	PLR	CPA	M	R					5																SALEABLE			
KEY A, BLACK, W/O CPA	33472-2252	A-BLK	GCP	PLR		M	R		2	3			6				10		12		14							SALEABLE			
KEY A, BLACK, W/O CPA	33472-2253	A-BLK	GCP	PLR		M	R	1	2	3			6	7			10	11	12		14		16			19		SALEABLE			
KEY A, BLACK, W/O CPA	33472-2254	A-BLK	GCP	PLR		M	R			3	4	5	6	7											18	19		SALEABLE			
KEY A, BLACK, W/O CPA	33472-2255	A-BLK	GCP	PLR		M	R			3	4	5	6	7			10								18	19	20	SALEABLE			
KEY A, BLACK, W/O CPA	33472-2256	A-BLK	GCP	PLR		M	R			3	4	5	6	7														SALEABLE			
KEY A, BLACK, W/O CPA	33472-2257	A-BLK	GCP	PLR		M	R			3	4						10	11	12			15	16	17	18	19	20	SALEABLE			
KEY A, BLACK, W/O CPA	33472-2258	A-BLK	GCP	PLR		M	R										10	11	12			15	16	17	18	19	20	SALEABLE			
KEY A, BLACK, W/O CPA	33472-2259	A-BLK	GCP	PLR		M	R			3	4						10	11	12				16				20	SALEABLE			
KEY A, BLACK, W/O CPA	33472-2260	A-BLK	GCP	PLR		M	R											11	12	13	14						20	SALEABLE			
KEY A, BLACK, W/O CPA	33472-2261	A-BLK	GCP	PLR		M	R				4			7							14			17		19		SALEABLE			
KEY A, BLACK, W/O CPA	33472-2262	A-BLK	GCP	PLR		M	R			3	4			7					12		14			17		19	20	SALEABLE			