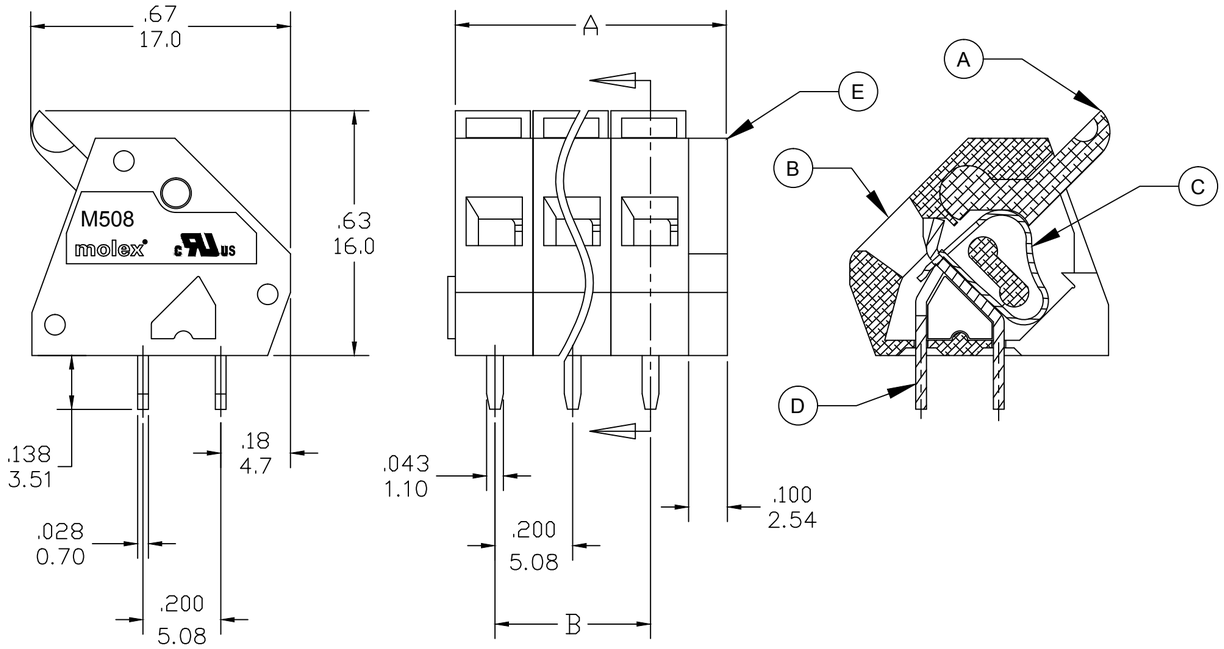

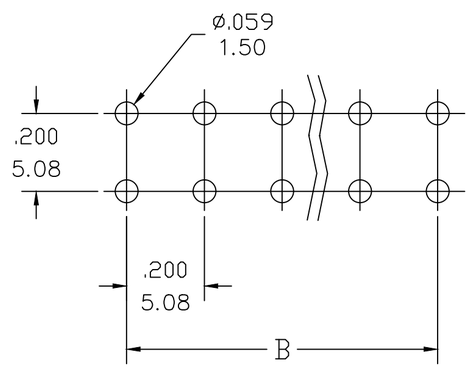

PCB LAYOUT

PART NUMBER DATA							
CIRCUITS	PART NUMBER	ENGINEERING NUMBER	COLOR	A IN	mm	B IN	mm
2	397000102	M508-00-02-3	GREEN	.50	12.7	.200	5.08
3	397000103	M508-00-03-3	GREEN	.70	17.8	.400	10.15
4	397000104	M508-00-04-3	GREEN	.90	22.9	.600	15.23
5	397000105	M508-00-05-3	GREEN	1.10	27.9	.800	20.31
6	397000106	M508-00-06-3	GREEN	1.30	33.0	1.000	25.39
7	397000107	M508-00-07-3	GREEN	1.50	38.1	1.199	30.46
8	397000108	M508-00-08-3	GREEN	1.70	43.2	1.399	35.54
9	397000109	M508-00-09-3	GREEN	1.90	48.3	1.599	40.62
10	397000110	M508-00-10-3	GREEN	2.10	53.3	1.799	45.70
11	397000111	M508-00-11-3	GREEN	2.30	58.4	1.999	50.77
12	397000112	M508-00-12-3	GREEN	2.50	63.5	2.199	55.85
13	397000113	M508-00-13-3	GREEN	2.70	68.6	2.399	60.93
14	397000114	M508-00-14-3	GREEN	2.90	73.7	2.599	66.01
15	397000115	M508-00-15-3	GREEN	3.10	78.7	2.799	71.08
16	397000116	M508-00-16-3	GREEN	3.30	83.8	2.999	76.16
17	397000117	M508-00-17-3	GREEN	3.50	88.9	3.198	81.24
18	397000118	M508-00-18-3	GREEN	3.70	94.0	3.398	86.32
19	397000119	M508-00-19-3	GREEN	3.90	99.1	3.598	91.39
20	397000120	M508-00-20-3	GREEN	4.10	104.1	3.798	96.47
21	397000121	M508-00-21-3	GREEN	4.30	109.2	3.998	101.55
22	397000122	M508-00-22-3	GREEN	4.50	114.3	4.198	106.63
23	397000123	M508-00-23-3	GREEN	4.70	119.4	4.398	111.70
24	397000124	M508-00-24-3	GREEN	4.90	124.5	4.598	116.78

CONTACT FACTORY FOR OPTIONAL COLORS

ENGINEERING NUMBER LEGEND

(B) M508-00-XX-X

SERIES — STYLE — POLES — COLOR

SPECIFICATIONS: (B)

1. MATERIAL:
   A. BUTTON: PA66 UL94 V-0
   B. BODY : PA66 UL94 V-0
   C. SPRING: ST. STEEL
   D. TERMINAL: BRASS TIN PLATED
   E. COVER: PA66 UL94 V-0
2. WIRE SIZE: 26 - 12AWG (SOL/STR)
3. ELECTRICAL RATING (UL): 300V, 10A
4. WIRE STRIP LENGTH: .30 (7.5mm)
5. POWER FREQUENCY WITHSTAND: AC 2500V FOR 1 MINUTE
6. INSULATION RESISTANCE: DC 500V, 500MΩ
7. RATED IMPULSE VOLTAGE: 4000V PLUS AND MINUS 5 TIMES EACH
8. OPERATING TEMPERATURE: -40°C TO +105°C
9. DIMS SHOWN ARE FOR REFERENCE ONLY

REV'D ENG NO. & SPECS EC NO: IPG2014-1482 2/18/14
DRWN: RSTONE 2014/02/25
CH'KD: G FARNSW 2013/12/26
APPR: JFMURPHY
DESCRIPTION
REV B

QUALITY SYMBOL
▼=0
(C)=0

GENERAL TOLERANCES (UNLESS SPECIFIED)	mm	INCH
4 PLACES	±---	±---
3 PLACES	±---	±.005
2 PLACES	±0.13	±.01
1 PLACE	±0.3	±---
ANGULAR ±---°		

DRAFT WHERE APPLICABLE MUST REMAIN WITHIN DIMENSIONS

DIMENSION STYLE: IN/MM
SCALE: ---
DESIGN UNITS: METRIC
THIRD ANGLE PROJECTION

DRAWN BY: RSTONE DATE: 2013/10/02
CHECKED BY: G FARNSW DATE: 2013/12/20
APPROVED BY: JFMURPHY DATE: 2013/12/26

TITLE: SPRING TERMINAL BLOCK .200 (5.08) PITCH 45 DEG MODULAR, LOW PROF

molex MOLEX INCORPORATED

MATERIAL NO.: SEE CHART
DOCUMENT NO.: SD-39700-006
SHEET NO.: 1 0F 1
SIZE: C

THIS DRAWING CONTAINS INFORMATION THAT IS PROPRIETARY TO MOLEX INCORPORATED AND SHOULD NOT BE USED WITHOUT WRITTEN PERMISSION