ICOR CONFIDENTIAL
S DOCUMENT AND THE DATA DISCLOSED
N OR HEREWITH IS NOT TO BE REPRODUCED,
, OR DISCLOSED IN WHOLE OR IN PART
NYONE WITHOUT PERMISSION OF VICOR CORP.

REV.	DESCRIPTION		DATE	APPROVED
#1	DRAWN FOR DEVELOPMENT	AK	5/03/01	GCK
#2	REVISED PER MARK-UP	PEI	9/13/01	GCK

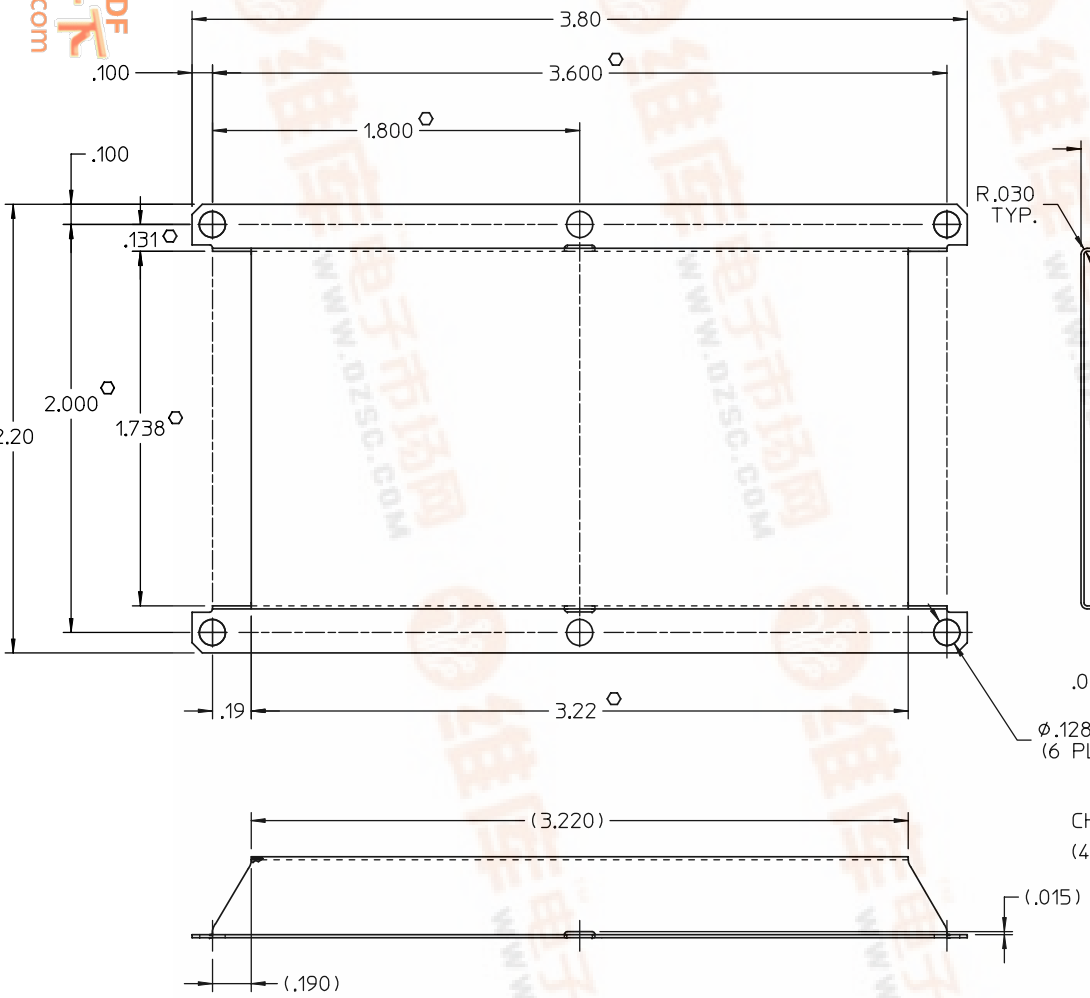

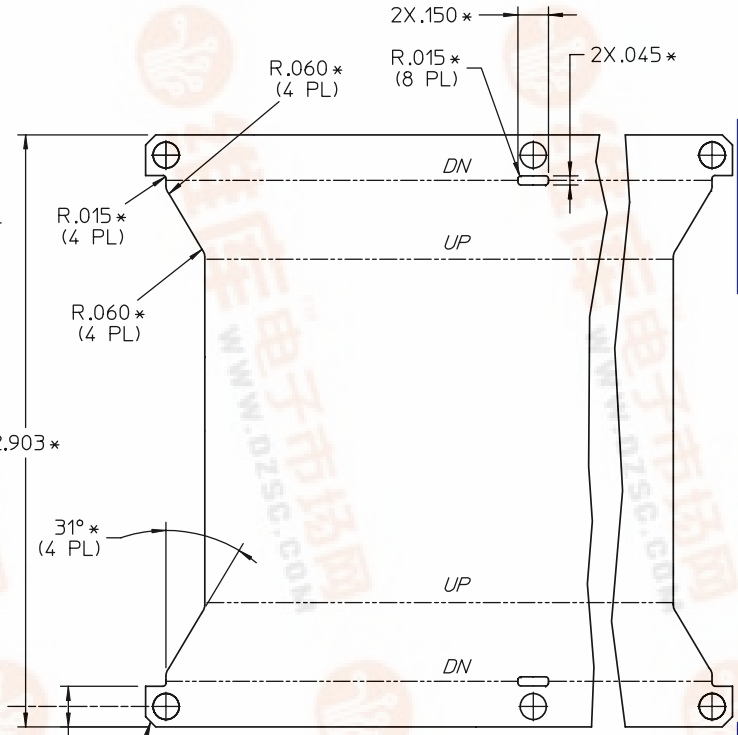

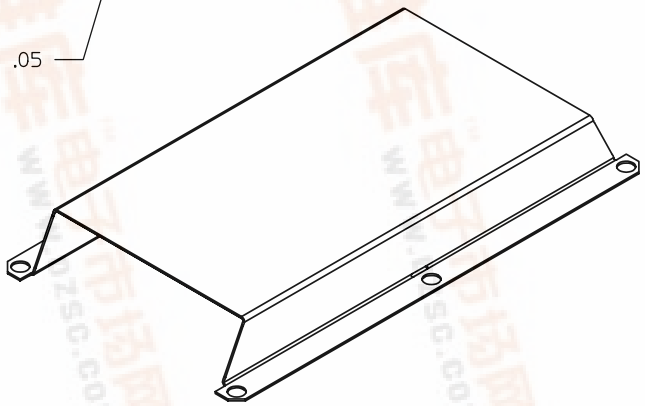

NOTES:
1. MATERIAL: ALUMINUM- (.015) THK, 5052
2. REMOVE BURRS & SHARP EDGES
3. "*" DIMENSIONS ARE NOT FOR VICOR INSPECTION.
4. " ⬡ " DENOTES CRITICAL CHARACTERISTICS FOR LOT INSPECTION.
5. FINISH: CLEAR CHROMATE

DRAWN BY	DATE
A. KUMAR	5/03/01

UNLESS OTHERWISE SPECIFIED DIMENSIONS ARE IN INCHES- TOLERANCES ARE:
FRACTIONS ±1/64 DECIMALS .XX= ±.01 .XXX=±.005 ANGLES ±1°

THIRD ANGLE PROJECTION

DO NOT SCALE DRAWING

VICOR

MAXI MODULE SHIELD SLOTTED BASE PLATE

SIZE	FSCM NO.	DWG NO	REV
C	67131	21242	#2

SCALE 2X SHEET 1 OF 1

查询21242供应商
捷多邦，专业PCB打样工厂，24小时加急出货