# Modular Crimping Tool

382-2198

**Date Last Revised: 4-20-05**

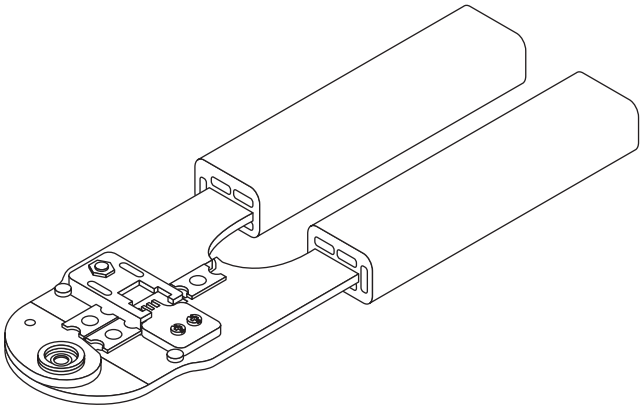

| SPECIFICATIONS | |
|---|---|
| **Type:** | Non-Keyed 8P8C Crimping |
| **Length:** | 7.3" (185mm) |
| **Frame:** | Low Carbon Steel |

***Available from Mouser Electronics***
***1-800-346-6873***
***www.mouser.com***

EPD-200193

Specifications are subject to change without notice. No liability or warranty implied by this information. Environmental compliance based on producer documentation.