查询TSM6866D供应商 捷多邦，专业PCB打样工厂，24小时加急出货

TSM6866D

20V Dual N-Channel MOSFET w/ESD Protected

TSSOP-8

Pin assignment:
1. Drain
2. Source 1
3. Source 1
4. Gate 1
5, Gate 2
6. Source 2
7, Source 2
8. Drain

V_{DS} = 20V
$R_{DS\ (on)}$, Vgs @ 4.5V, Ids @ 6.5A =28mΩ
$R_{DS\ (on)}$, Vgs @ 2.5V, Ids @ 5.5A =40mΩ

Features

- ✧ Advanced trench process technology
- ✧ High density cell design for ultra low on-resistance
- ✧ Excellent thermal and electrical capabilities
- ✧ Specially designed for Li-ion battery packs.
- ✧ Battery switch application

Block Diagram

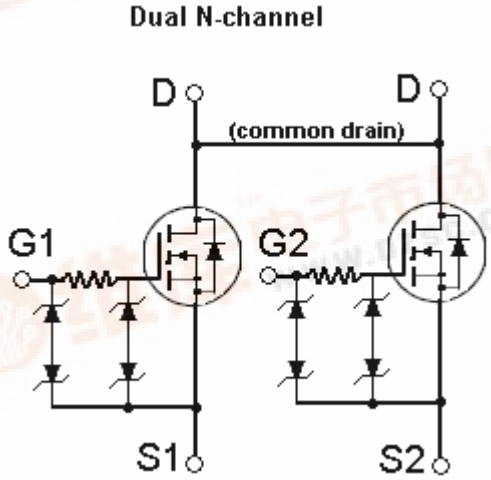

Ordering Information

Part No.	Packing	Package
TSM6968DCA	Tape & Reel 3,000/per reel	TSSOP-8

Absolute Maximum Rating (Ta = 25 °C unless otherwise noted)

Parameter		Symbol	Limit	Unit
Drain-Source Voltage		V_{DS}	20V	V
Gate-Source Voltage		V_{GS}	± 12	V
Continuous Drain Current, V_{GS} @4.5V.		I_D	6.5	A
Pulsed Drain Current, V_{GS} @4.5V		I_{DM}	30	A
Maximum Power Dissipation	Ta = 25 °C	P_D	1.5	W
	Ta = 70 °C		0.96	
Operating Junction Temperature		T_J	+150	°C
Operating Junction and Storage Temperature Range		T_J, T_{STG}	- 55 to +150	°C

Thermal Performance

Parameter	Symbol	Limit	Unit
Junction to Foot (Drain) Thermal Resistance	Rθjf	35	°C/W
Junction to Ambient Thermal Resistance (PCB mounted)	Rθja	83	°C/W

Note: Surface mounted on FR4 board t<=10sec.

找PDF 维库一下 pdf.dzsc.com

Electrical Characteristics

Rate I_D = 6.5A, (Ta = 25 °C unless otherwise noted)

Parameter	Conditions	Symbol	Min	Typ	Max	Unit
Static						
Drain-Source Breakdown Voltage	V_{GS} = 0V, I_D = 250uA	BV_{DSS}	20	--	--	V
Drain-Source On-State Resistance	V_{GS} = 4.5V, I_D = 6.5A	$R_{DS(ON)}$	--	22	28	mΩ
Drain-Source On-State Resistance	V_{GS} = 2.5V, I_D = 5.5A	$R_{DS(ON)}$	--	30	40	
Gate Threshold Voltage	V_{DS} = V_{GS}, I_D = 250uA	$V_{GS(TH)}$	0.5	1.0	--	V
Zero Gate Voltage Drain Current	V_{DS} = 20V, V_{GS} = 0V	I_{DSS}	--	--	10	uA
Gate Body Leakage	V_{GS} = ± 4.5V, V_{DS} = 0V	I_{GSS}	--	--	± 100	nA
Gate Body Leakage	V_{GS} = ± 12V, V_{DS} = 0V	I_{GSS}	--	--	± 10	mA
On-State Drain Current	V_{GS} = 4.5V, V_{DS} >= 5V	$I_{D(ON)}$	30	--	--	A
Forward Transconductance	V_{DS} = 10V, I_D = 6.5A	g_{fs}	--	40	--	S
Dynamic						
Total Gate Charge	V_{DS} = 10V, I_D = 6.5A, V_{GS} = 4.5V	Q_g	--	12	--	nC
Gate-Source Charge		Q_{gs}	--	2	--	
Gate-Drain Charge		Q_{gd}	--	3.5	--	
Turn-On Delay Time	V_{DD} = 10V, R_L = 10Ω, I_D = 1A, V_{GEN} = 4.5V, R_G = 6Ω	$t_{d(on)}$	--	75	100	nS
Turn-On Rise Time		t_r	--	125	150	
Turn-Off Delay Time		$t_{d(off)}$	--	600	720	
Turn-Off Fall Time		t_f	--	300	360	
Input Capacitance	V_{DS} = 10V, V_{GS} = 0V, f = 1.0MHz	C_{iss}	--	870	--	pF
Output Capacitance		C_{oss}	--	320	--	
Reverse Transfer Capacitance		C_{rss}	--	240	--	
Source-Drain Diode						
Max. Diode Forward Current		I_S	--	--	1.0	A
Diode Forward Voltage	I_S = 1.0A, V_{GS} = 0V	V_{SD}	--	0.7	1.2	V

Note : pulse test: pulse width <=300uS, duty cycle <=2%

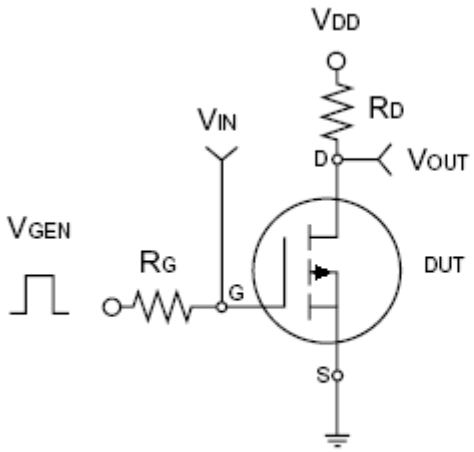

Switching Test Circuit

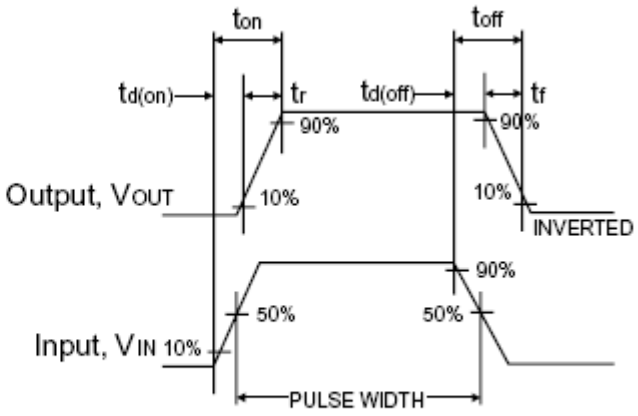

Switchin Waveforms

TSC

Typical Characteristics Curve (Ta = 25 °C unless otherwise noted)

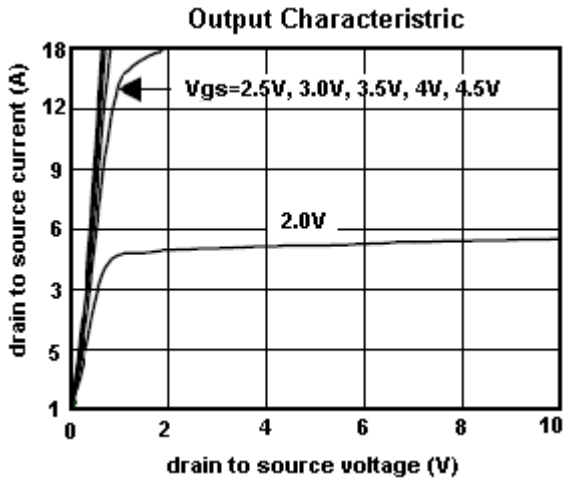

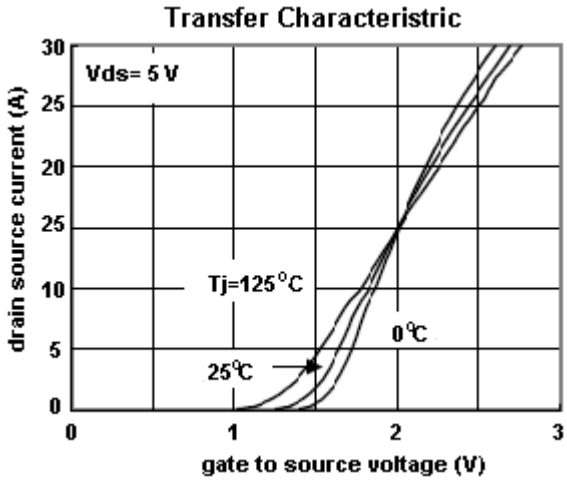

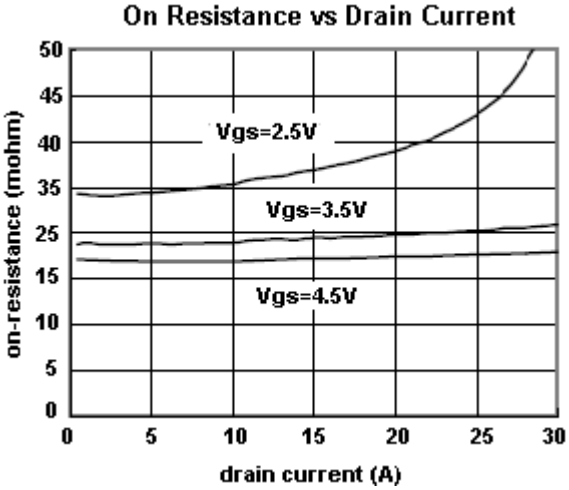

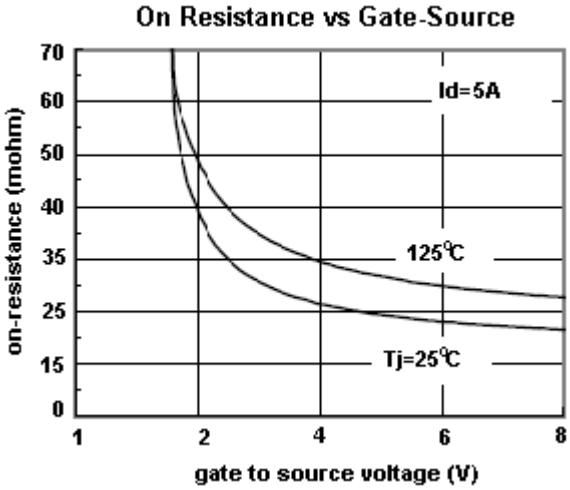

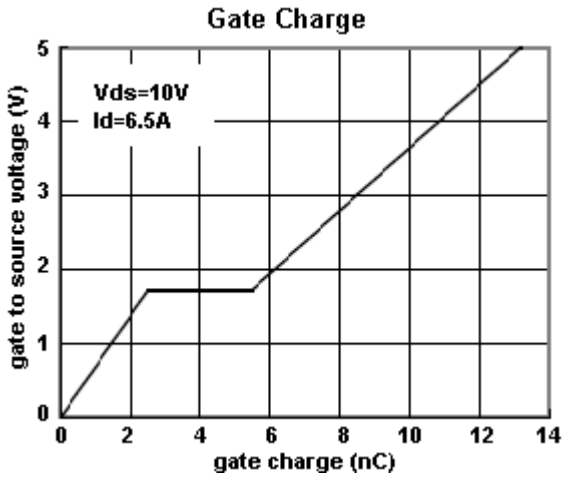

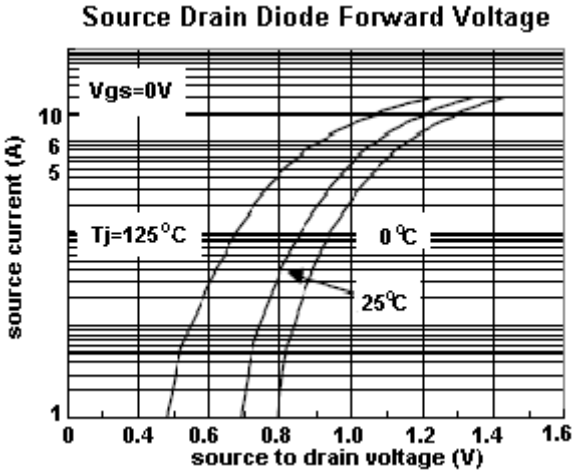

TSSOP-8 Mechanical Drawing

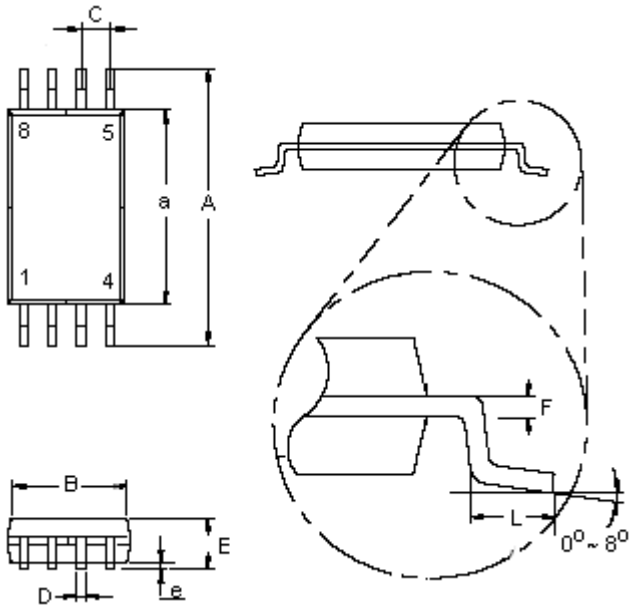

TSSOP-8 DIMENSION				
DIM	MILLIMETERS		INCHES	
	MIN	MAX	MIN	MAX
A	6.20	6.60	0.244	0.260
a	4.30	4.50	0.170	0.177
B	2.90	3.10	0.114	0.122
C	0.65 (typ)		0.025 (typ)	
D	0.25	0.30	0.010	0.019
E	1.05	1.20	0.041	0.049
e	0.05	0.15	0.002	0.009
F	0.127		0.005	
L	0.50	0.70	0.020	0.028