Revision			
Rev.	Description	Date	Approved

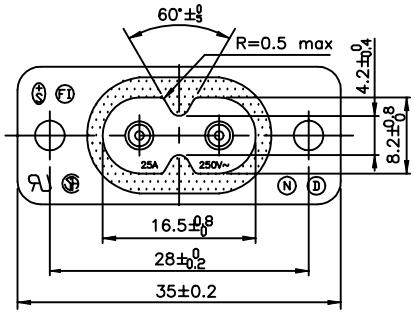

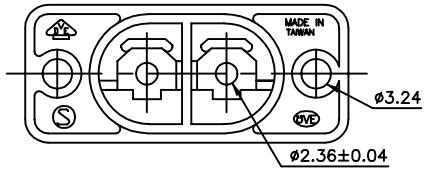

2.5A 250V~
APPROVALS:
UL CSA VDE SEV SETI DEMKO
NEMKO SEMKO ÖVE CB

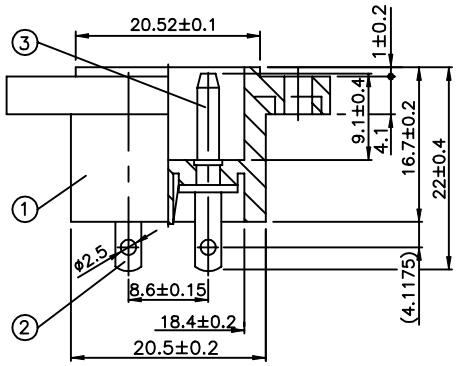

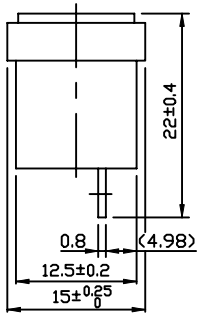

PANEL CUT-OUT

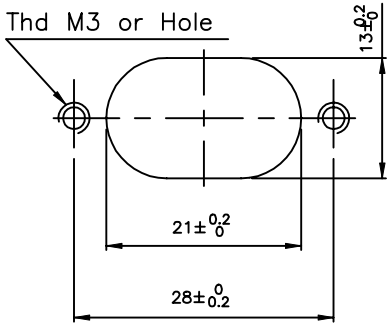

Dim range (mm)	Tolerance +/- (mm)
0-1	0.15
1-6	0.20
6-18	0.30
18-50	0.50
50-120	0.70
120-250	0.90
250-500	1.20

Qualtek Electronics Corp.
PPC DIVISION

Part Number: 770W-X2/03

Description:

Drawn/Date	Checked/Date	Approved/Date
S.CHEN 11-21-99	11-21-99	JJH/11-21-99