查询SN74LS378DW供应商 捷多邦，专业PCB打样工厂，24小时加急出货

MOTOROLA

SN54/74LS377
SN54/74LS378
SN54/74LS379

OCTAL D FLIP-FLOP WITH ENABLE; HEX D FLIP-FLOP WITH ENABLE; 4-BIT D FLIP-FLOP WITH ENABLE

OCTAL D FLIP-FLOP WITH ENABLE; HEX D FLIP-FLOP WITH ENABLE; 4-BIT D FLIP-FLOP WITH ENABLE

LOW POWER SCHOTTKY

The SN54/74LS377 is an 8-bit register built using advanced Low Power Schottky technology. This register consists of eight D-type flip-flops with a buffered common clock and a buffered common clock enable.

The SN54/74LS378 is a 6-Bit Register with a buffered common enable. This device is similar to the SN54/74LS174, but with common Enable rather than common Master Reset.

The SN54/74LS379 is a 4-Bit Register with buffered common Enable. This device is similar to the SN54/74LS175 but features the common Enable rather then common Master Reset.

- 8-Bit High Speed Parallel Registers
- Positive Edge-Triggered D-Type Flip Flops
- Fully Buffered Common Clock and Enable Inputs
- True and Complement Outputs
- Input Clamp Diodes Limit High Speed Termination Effects

PIN NAMES		LOADING (Note a) HIGH	LOW
$\overline{E}$	Enable (Active LOW) Input	0.5 U.L.	0.25 U.L.
D_0-D_3	Data Inputs	0.5 U.L.	0.25 U.L.
CP	Clock (Active HIGH Going Edge) Input	0.5 U.L.	0.25 U.L.
Q_0-Q_3	True Outputs (Note b)	10 U.L.	5 (2.5) U.L.
$\overline{Q}_0-\overline{Q}_3$	Complemented Outputs (Note b)	10 U.L.	5 (2.5) U.L.

NOTES:
a) 1 TTL Unit Load (U.L.) = 40 µA HIGH/1.6 mA LOW.
b) The Output LOW drive factor is 2.5 U.L. for Military (54) and 5 U.L. for Commercial (74) Temperature Ranges.

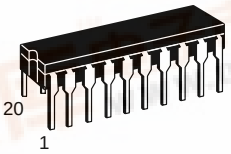

J SUFFIX
CERAMIC
CASE 732-03

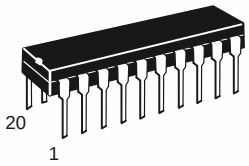

N SUFFIX
PLASTIC
CASE 738-03

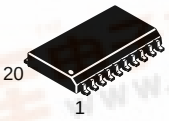

DW SUFFIX
SOIC
CASE 751D-03

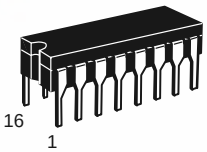

J SUFFIX
CERAMIC
CASE 620-09

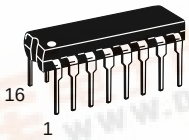

N SUFFIX
PLASTIC
CASE 648-08

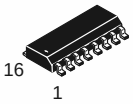

D SUFFIX
SOIC
CASE 751B-03

ORDERING INFORMATION

SN54LSXXXJ	Ceramic
SN74LSXXXN	Plastic
SN74LSXXXDW	SOIC
SN74LSXXXD	SOIC

找PDF 维库一下 pdf.dzsc.com

CONNECTION DIAGRAM DIPS (TOP VIEW)

SN54/74LS377

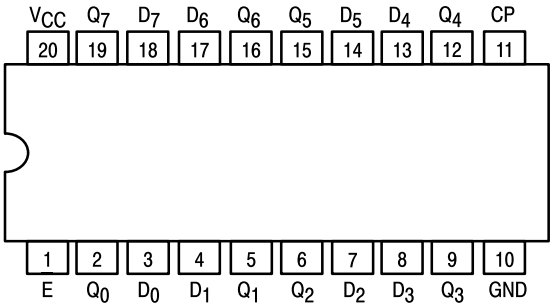

NOTE:
The Flatpak version has the same pinouts (Connection Diagram) as the Dual In-Line Package.

SN54/74LS378

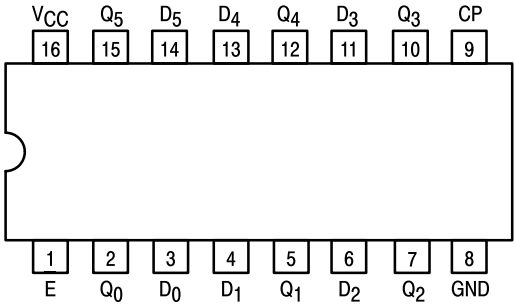

NOTE:
The Flatpak version has the same pinouts (Connection Diagram) as the Dual In-Line Package.

SN54/74LS379

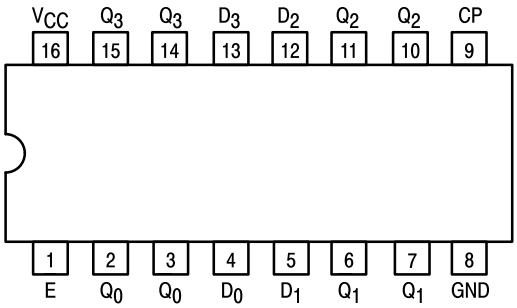

NOTE:
The Flatpak version has the same pinouts (Connection Diagram) as the Dual In-Line Package.

LOGIC DIAGRAMS

SN54/74LS377

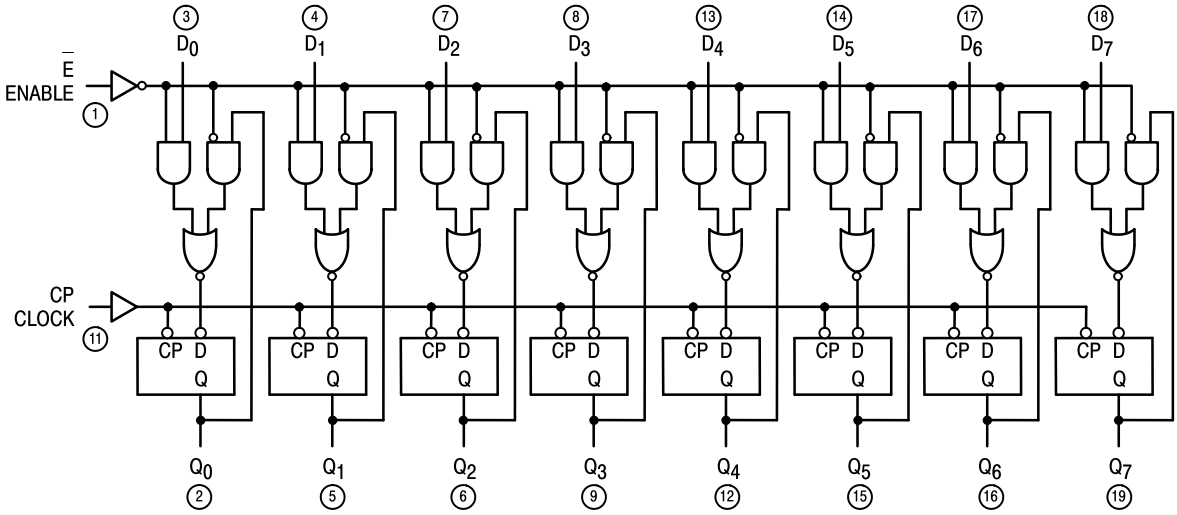

SN54/74LS378

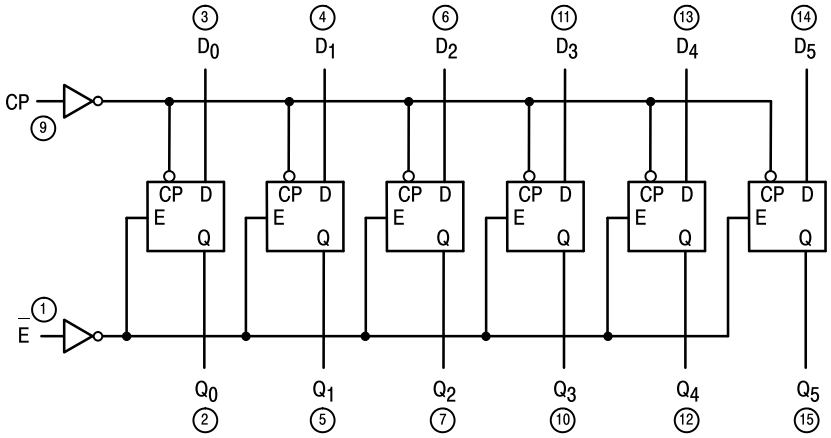

SN54/74LS379

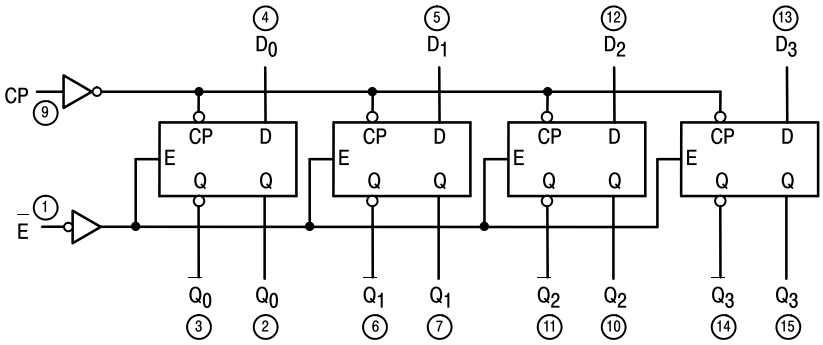

GUARANTEED OPERATING RANGES

Symbol	Parameter		Min	Typ	Max	Unit
V_{CC}	Supply Voltage	54 74	4.5 4.75	5.0 5.0	5.5 5.25	V
T_A	Operating Ambient Temperature Range	54 74	–55 0	25 25	125 70	°C
I_{OH}	Output Current — High	54, 74			–0.4	mA
I_{OL}	Output Current — Low	54 74			4.0 8.0	mA

DC CHARACTERISTICS OVER OPERATING TEMPERATURE RANGE (unless otherwise specified)

Symbol	Parameter		Limits Min	Limits Typ	Limits Max	Unit	Test Conditions	
V_{IH}	Input HIGH Voltage		2.0			V	Guaranteed Input HIGH Voltage for All Inputs	
V_{IL}	Input LOW Voltage	54			0.7	V	Guaranteed Input LOW Voltage for All Inputs	
		74			0.8			
V_{IK}	Input Clamp Diode Voltage			–0.65	–1.5	V	V_{CC} = MIN, I_{IN} = –18 mA	
V_{OH}	Output HIGH Voltage	54	2.5	3.5		V	V_{CC} = MIN, I_{OH} = MAX, V_{IN} = V_{IH} or V_{IL} per Truth Table	
		74	2.7	3.5		V		
V_{OL}	Output LOW Voltage	54, 74		0.25	0.4	V	I_{OL} = 4.0 mA	V_{CC} = V_{CC} MIN, V_{IN} = V_{IL} or V_{IH} per Truth Table
		74		0.35	0.5	V	I_{OL} = 8.0 mA	
I_{IH}	Input HIGH Current				20	µA	V_{CC} = MAX, V_{IN} = 2.7 V	
					0.1	mA	V_{CC} = MAX, V_{IN} = 7.0 V	
I_{IL}	Input LOW Current				–0.4	mA	V_{CC} = MAX, V_{IN} = 0.4 V	
I_{OS}	Short Circuit Current (Note 1)		–20		–100	mA	V_{CC} = MAX	
I_{CC}	Power Supply Current	LS377 LS378 LS379			28 22 15	mA	V_{CC} = MAX, NOTE 1	

NOTE: With all inputs open and GND applied to all data and enable inputs, I_{CC} is measured after a momentary GND, then 4.5 V is applied to clock.
Note 1: Not more than one output should be shorted at a time, nor for more than 1 second.

AC CHARACTERISTICS (T_A = 25°C, V_{CC} = 5.0 V)

Symbol	Parameter	Limits Min	Limits Typ	Limits Max	Unit	Test Conditions
f_{MAX}	Maximum Clock Frequency	30	40		MHz	V_{CC} = 5.0 V C_L = 15 pF
t_{PLH} t_{PHL}	Propagation Delay, Clock to Output		17 18	27 27	ns	

AC SETUP REQUIREMENTS (T_A = 25°C, V_{CC} = 5.0 V)

Symbol	Parameter		Limits Min	Limits Typ	Limits Max	Unit	Test Conditions
t_W	Any Pulse Width		20			ns	V_{CC} = 5.0 V
t_s	Data Setup Time		20			ns	
t_s	Enable Setup Time	Inactive — State	10			ns	
		Active — State	25			ns	
t_h	Any Hold Time		5.0			ns	

DEFINITION OF TERMS

SETUP TIME (ts) — is defined as the minimum time required for the correct logic level to be present at the logic input prior to the clock transition from LOW-to-HIGH in order to be recognized and transferred to the outputs.

HOLD TIME (t_h) — is defined as the minimum time following the clock transition from LOW-to-HIGH that the logic level must be maintained at the input in order to ensure continued recognition. A negative HOLD TIME indicates that the correct logic level may be released prior to the clock transition from LOW-to-HIGH and still be recognized.

TRUTH TABLE

$\overline{E}$	CP	D_n	Q_n	$\overline{Q}_n$
H	↑	X	No Change	No Change
L	↑	H	H	L
L	↑	L	L	H

L = LOW Voltage Level
H = HIGH Voltage Level
X = Immaterial

AC WAVEFORMS

SN54/74LS377

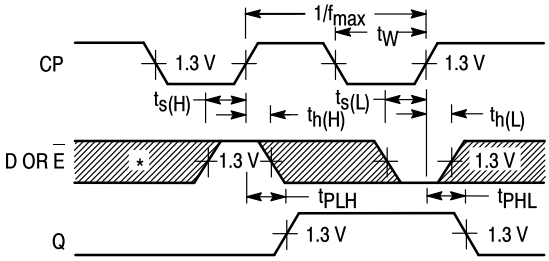

Figure 1. Clock to Output Delays Clock Pulse Width, Frequency, Setup and Hold Times Data or Enable to Clock

SN54/74LS378

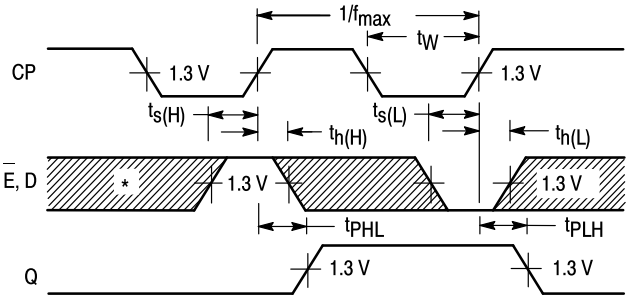

Figure 2. Clock to Output Delays Clock Pulse Width, Frequency, Setup and Hold Times Data or Enable to Clock

SN54/74LS379

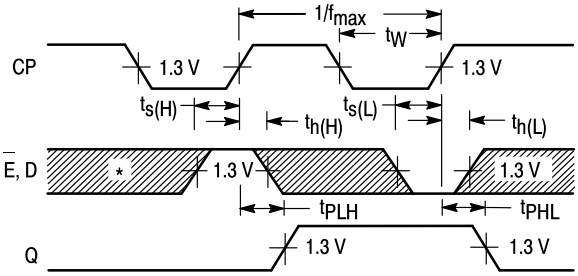

*The shaded areas indicate when the input is permitted to change for predictable output performance.

Figure 3. Clock to Output Delays Clock Pulse Width, Frequency, Setup and Hold Times Data, Enable to Clock

Case 751B-03 D Suffix
16-Pin Plastic
SO-16

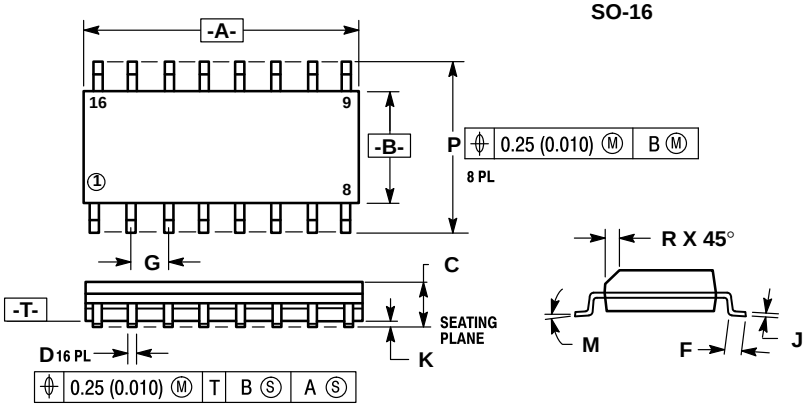

NOTES:
1. DIMENSIONING AND TOLERANCING PER ANSI Y14.5M, 1982.
2. CONTROLLING DIMENSION: MILLIMETER.
3. DIMENSION A AND B DO NOT INCLUDE MOLD PROTRUSION.
4. MAXIMUM MOLD PROTRUSION 0.15 (0.006) PER SIDE.
5. 751B-01 IS OBSOLETE, NEW STANDARD 751B-03.

	MILLIMETERS		INCHES	
DIM	MIN	MAX	MIN	MAX
A	9.80	10.00	0.386	0.393
B	3.80	4.00	0.150	0.157
C	1.35	1.75	0.054	0.068
D	0.35	0.49	0.014	0.019
F	0.40	1.25	0.016	0.049
G	1.27 BSC		0.050 BSC	
J	0.19	0.25	0.008	0.009
K	0.10	0.25	0.004	0.009
M	0°	7°	0°	7°
P	5.80	6.20	0.229	0.244
R	0.25	0.50	0.010	0.019

Case 648-08 N Suffix
16-Pin Plastic

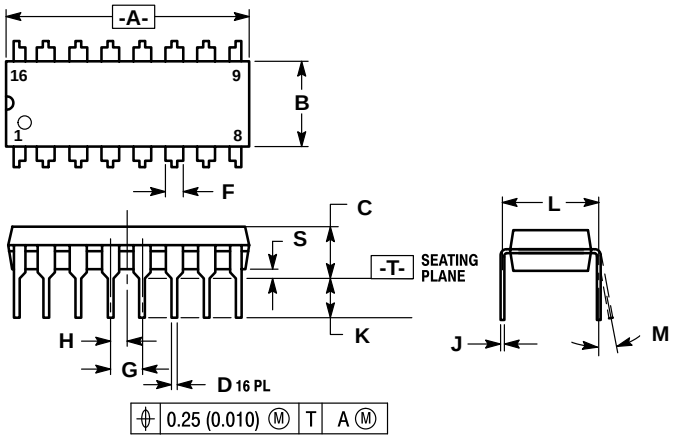

NOTES:
1. DIMENSIONING AND TOLERANCING PER ANSI Y14.5M, 1982.
2. CONTROLLING DIMENSION: INCH.
3. DIMENSION "L" TO CENTER OF LEADS WHEN FORMED PARALLEL.
4. DIMENSION "B" DOES NOT INCLUDE MOLD FLASH.
5. ROUNDED CORNERS OPTIONAL.
6. 648-01 THRU -07 OBSOLETE, NEW STANDARD 648-08.

	MILLIMETERS		INCHES	
DIM	MIN	MAX	MIN	MAX
A	18.80	19.55	0.740	0.770
B	6.35	6.85	0.250	0.270
C	3.69	4.44	0.145	0.175
D	0.39	0.53	0.015	0.021
F	1.02	1.77	0.040	0.070
G	2.54 BSC		0.100 BSC	
H	1.27 BSC		0.050 BSC	
J	0.21	0.38	0.008	0.015
K	2.80	3.30	0.110	0.130
L	7.50	7.74	0.295	0.305
M	0°	10°	0°	10°
S	0.51	1.01	0.020	0.040

Case 620-09 J Suffix
16-Pin Ceramic Dual In-Line

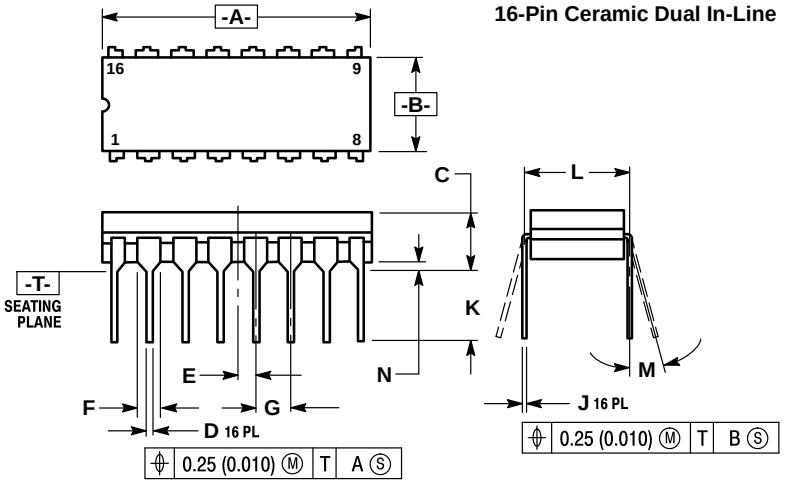

NOTES:
1. DIMENSIONING AND TOLERANCING PER ANSI Y14.5M, 1982.
2. CONTROLLING DIMENSION: INCH.
3. DIMENSION L TO CENTER OF LEAD WHEN FORMED PARALLEL.
4. DIM F MAY NARROW TO 0.76 (0.030) WHERE THE LEAD ENTERS THE CERAMIC BODY.
5. 620-01 THRU -08 OBSOLETE, NEW STANDARD 620-09.

	MILLIMETERS		INCHES	
DIM	MIN	MAX	MIN	MAX
A	19.05	19.55	0.750	0.770
B	6.10	7.36	0.240	0.290
C	—	4.19	—	0.165
D	0.39	0.53	0.015	0.021
E	1.27 BSC		0.050 BSC	
F	1.40	1.77	0.055	0.070
G	2.54 BSC		0.100 BSC	
J	0.23	0.27	0.009	0.011
K	—	5.08	—	0.200
L	7.62 BSC		0.300 BSC	
M	0°	15°	0°	15°
N	0.39	0.88	0.015	0.035

Motorola reserves the right to make changes without further notice to any products herein. Motorola makes no warranty, representation or guarantee regarding the suitability of its products for any particular purpose, nor does Motorola assume any liability arising out of the application or use of any product or circuit, and specifically disclaims any and all liability, including without limitation consequential or incidental damages. “Typical” parameters can and do vary in different applications. All operating parameters, including “Typicals” must be validated for each customer application by customer’s technical experts. Motorola does not convey any license under its patent rights nor the rights of others. Motorola products are not designed, intended, or authorized for use as components in systems intended for surgical implant into the body, or other applications intended to support or sustain life, or for any other application in which the failure of the Motorola product could create a situation where personal injury or death may occur. Should Buyer purchase or use Motorola products for any such unintended or unauthorized application, Buyer shall indemnify and hold Motorola and its officers, employees, subsidiaries, affiliates, and distributors harmless against all claims, costs, damages, and expenses, and reasonable attorney fees arising out of, directly or indirectly, any claim of personal injury or death associated with such unintended or unauthorized use, even if such claim alleges that Motorola was negligent regarding the design or manufacture of the part. Motorola and ⓜ are registered trademarks of Motorola, Inc. Motorola, Inc. is an Equal Opportunity/Affirmative Action Employer.

Literature Distribution Centers:
USA: Motorola Literature Distribution; P.O. Box 20912; Phoenix, Arizona 85036.
EUROPE: Motorola Ltd.; European Literature Centre; 88 Tanners Drive, Blakelands, Milton Keynes, MK14 5BP, England.
JAPAN: Nippon Motorola Ltd.; 4-32-1, Nishi-Gotanda, Shinagawa-ku, Tokyo 141, Japan.
ASIA PACIFIC: Motorola Semiconductors H.K. Ltd.; Silicon Harbour Center, No. 2 Dai King Street, Tai Po Industrial Estate, Tai Po, N.T., Hong Kong.