Data Sheet November 3, 2005 FN4899.5

+/-15kV ESD Protected, +3V to +5.5V, 1Microamp, 250kbps, RS-232 Transceivers with Enhanced Automatic Powerdown

The Intersil ICL32XXE devices are 3.0V to 5.5V powered RS-232 transmitters/receivers which meet EIA/TIA-232 and V.28/V.24 specifications, even at V_{CC} = 3.0V. Additionally, they provide ±15kV ESD protection (IEC61000-4-2 Air Gap and Human Body Model) on transmitter outputs and receiver inputs (RS-232 pins). Targeted applications are PDAs, Palmtops, and notebook and laptop computers where the low operational, and even lower standby, power consumption is critical. Efficient on-chip charge pumps, coupled with manual and enhanced automatic powerdown functions, reduce the standby supply current to a 1µA trickle. Small footprint packaging, and the use of small, low value capacitors ensure board space savings as well. Data rates greater than 250kbps are guaranteed at worst case load conditions. This family is fully compatible with 3.3V only systems, mixed 3.3V and 5.0V systems, and 5.0V only systems.

The ICL3244E is a 3 driver, 5 receiver device that provides a complete serial port suitable for laptop or notebook computers. It also includes a noninverting always-active receiver for “wake-up” capability.

These devices, feature an ***enhanced automatic powerdown*** function which powers down the on-chip power-supply and driver circuits. This occurs when all receiver and transmitter inputs detect no signal transitions for a period of 30 seconds. These devices power back up, automatically, whenever they sense a transition on any transmitter or receiver input.

Table 1 summarizes the features of the devices represented by this data sheet, while Application Note AN9863 summarizes the features of each device comprising the ICL32XXE 3V family.

Features

- Pb-Free Plus Anneal Available (RoHS Compliant)
- ESD Protection for RS-232 I/O Pins to ±15kV (IEC61000)
- Manual and Enhanced Automatic Powerdown Features
- Drop in Replacements for MAX3224E, MAX3226E, MAX3244E
- Meets EIA/TIA-232 and V.28/V.24 Specifications at 3V
- RS-232 Compatible with V_{CC} = 2.7V
- Latch-Up Free
- On-Chip Voltage Converters Require Only Four External 0.1µF Capacitors
- Guaranteed Mouse Driveability (ICL3244E)
- “Ready to Transmit” Indicator Output (ICL3224E/26E)
- Receiver Hysteresis For Improved Noise Immunity
- Guaranteed Minimum Data Rate 250kbps
- Guaranteed Minimum Slew Rate 6V/µs
- Wide Power Supply Range. . . . . Single +3V to +5.5V
- Low Supply Current in Powerdown State 1µA

Applications

- Any System Requiring RS-232 Communication Ports
  - Battery Powered, Hand-Held, and Portable Equipment
  - Laptop Computers, Notebooks, Palmtops
  - Modems, Printers and other Peripherals
  - Digital Cameras
  - Cellular/Mobile Phones

Related Literature

- Technical Brief TB363 “Guidelines for Handling and Processing Moisture Sensitive Surface Mount Devices (SMDs)”

TABLE 1. SUMMARY OF FEATURES

PART NUMBER	NO. OF Tx.	NO. OF Rx.	NO. OF MONITOR Rx. (R_{OUTB})	DATA RATE (kbps)	Rx. ENABLE FUNCTION?	READY OUTPUT?	MANUAL POWER-DOWN?	ENHANCED AUTOMATIC POWERDOWN FUNCTION?
ICL3224E	2	2	0	250	No	Yes	Yes	Yes
ICL3226E	1	1	0	250	No	Yes	Yes	Yes
ICL3244E	3	5	1	250	No	No	Yes	Yes

CAUTION: These devices are sensitive to electrostatic discharge; follow proper IC Handling Procedures.
1-888-INTERSIL or1-888-468-3774 | Intersil (and design) is a registered trademark of Intersil Americas Inc.
Copyright Intersil Americas Inc. 2000, 2001, 2003-2005. All Rights Reserved.
All other trademarks mentioned are the property of their respective owners.

Ordering Information

PART NO.	PART MARKING	TEMP. RANGE (°C)	PACKAGE	PKG. DWG. #
ICL3224EIA	ICL3224EIA	-40 to 85	20 Ld SSOP	M20.209
ICL3224EIA-T	ICL3224EIA	-40 to 85	20 Ld SSOP Tape and Reel	M20.209
ICL3224EIAZ (Note)	3224EIAZ	-40 to 85	20 Ld SSOP (Pb-free)	M20.209
ICL3224EIAZ-T (Note)	3224EIAZ	-40 to 85	20 Ld SSOP Tape and Reel (Pb-free)	M20.209
ICL3226ECA	ICL3226ECA	0 to 70	16 Ld SSOP	M16.209
ICL3226ECA-T	ICL3226ECA	0 to 70	16 Ld SSOP Tape and Reel	M16.209
ICL3226EIA	ICL3226EIA	-40 to 85	16 Ld SSOP	M16.209
ICL3226EIA-T	ICL3226EIA	-40 to 85	16 Ld SSOP Tape and Reel	M16.209
ICL3244ECA	ICL3244ECA	0 to 70	28 Ld SSOP	M28.209
ICL3244ECA-T	ICL3244ECA	0 to 70	28 Ld SSOP Tape and Reel	M28.209
ICL3244ECAZ (Note)	ICL3244ECAZ	0 to 70	28 Ld SSOP (Pb-free)	M28.209
ICL3244ECAZ-T (Note)	ICL3244ECAZ	0 to 70	28 Ld SSOP Tape and Reel (Pb-free)	M28.209
ICL3244EIA	ICL3244EIA	-40 to 85	28 Ld SSOP	M28.209
ICL3244EIA-T	ICL3244EIA	-40 to 85	28 Ld SSOP Tape and Reel	M28.209
ICL3244EIAZ (Note)	ICL3244EIAZ	-40 to 85	28 Ld SSOP (Pb-free)	M28.209
ICL3244EIAZ-T (Note)	ICL3244EIAZ	-40 to 85	28 Ld SSOP Tape and Reel (Pb-free)	M28.209
ICL3244EIB	ICL3244EIB	-40 to 85	28 Ld SOIC	M28.3

NOTE: Intersil Pb-free plus anneal products employ special Pb-free material sets; molding compounds/die attach materials and 100% matte tin plate termination finish, which are RoHS compliant and compatible with both SnPb and Pb-free soldering operations. Intersil Pb-free products are MSL classified at Pb-free peak reflow temperatures that meet or exceed the Pb-free requirements of IPC/JEDEC J STD-020.

Pinouts

ICL3224E (SSOP)
TOP VIEW

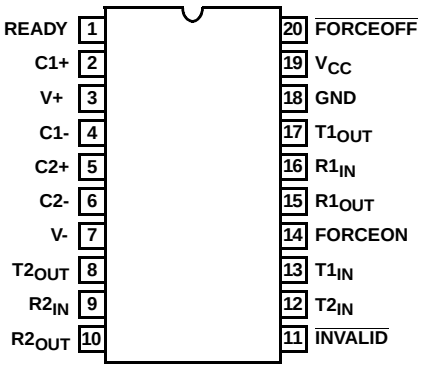

ICL3226E (SSOP)
TOP VIEW

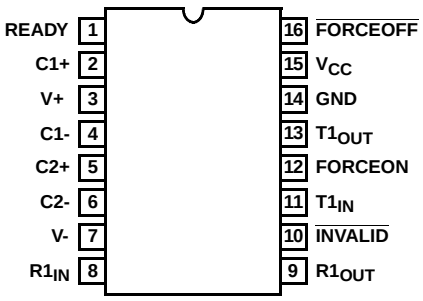

Pinouts (Continued)

ICL3244E (SOIC, SSOP)
TOP VIEW

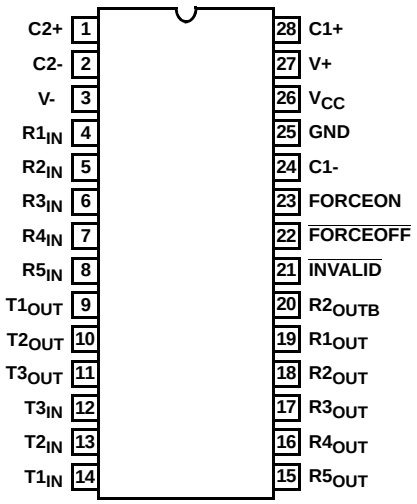

Pin Descriptions

PIN	FUNCTION
V_{CC}	System power supply input (3.0V to 5.5V).
V+	Internally generated positive transmitter supply (+5.5V).
V-	Internally generated negative transmitter supply (-5.5V).
GND	Ground connection.
C1+	External capacitor (voltage doubler) is connected to this lead.
C1-	External capacitor (voltage doubler) is connected to this lead.
C2+	External capacitor (voltage inverter) is connected to this lead.
C2-	External capacitor (voltage inverter) is connected to this lead.
T_{IN}	TTL/CMOS compatible transmitter Inputs.
T_{OUT}	±15kV ESD Protected, RS-232 level (nominally ±5.5V) transmitter outputs.
R_{IN}	±15kV ESD Protected, RS-232 compatible receiver inputs.
R_{OUT}	TTL/CMOS level receiver outputs.
R_{OUTB}	TTL/CMOS level, noninverting, always enabled receiver outputs.
$\overline{\text{INVALID}}$	Active low output that indicates if no valid RS-232 levels are present on any receiver input.
READY	Active high output that indicates when the ICL32XXE is ready to transmit (i.e., V- ≤ -4V)
$\overline{\text{FORCEOFF}}$	Active low to shut down transmitters and on-chip power supply. This overrides any automatic circuitry and FORCEON (see Table 2).
FORCEON	Active high input to override automatic powerdown circuitry thereby keeping transmitters active. ($\overline{\text{FORCEOFF}}$ must be high).

Typical Operating Circuits

ICL3224E

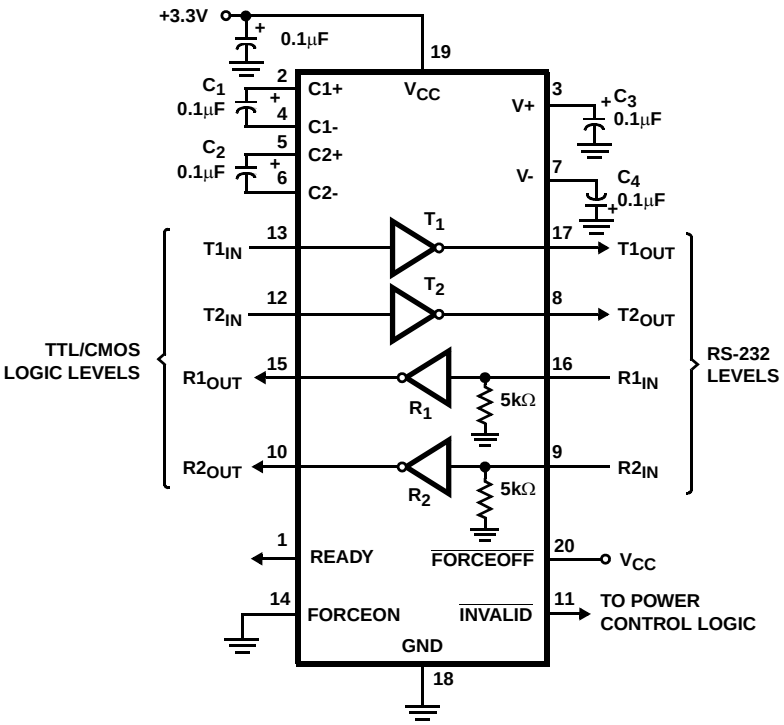

ICL3226E

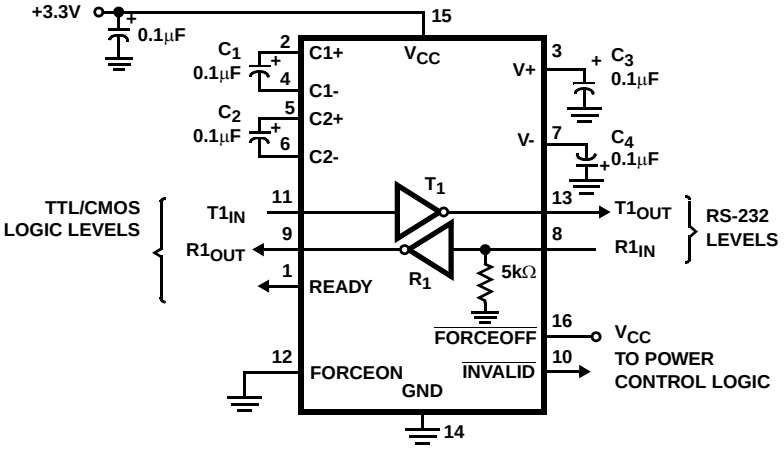

Typical Operating Circuits (Continued)

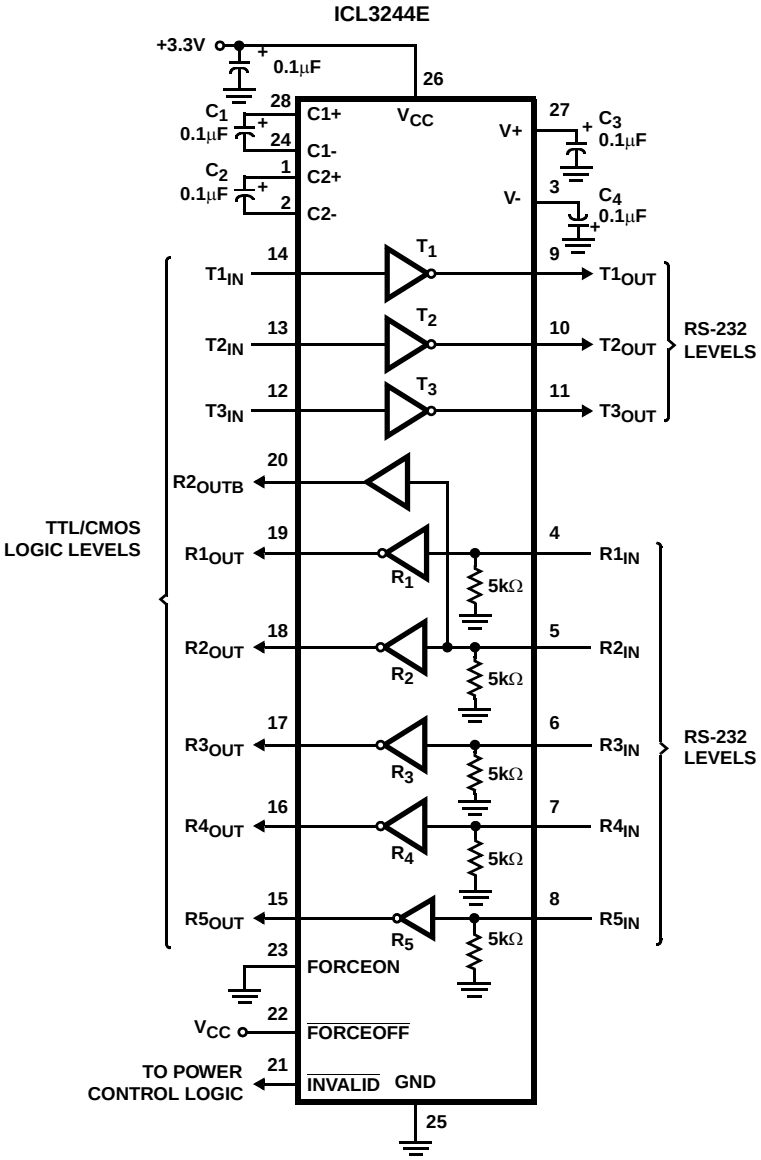

Absolute Maximum Ratings

V_{CC} to Ground . . . . . -0.3V to 6V
V+ to Ground . . . . . -0.3V to 7V
V- to Ground . . . . . +0.3V to -7V
V+ to V- 14V
Input Voltages
  T_{IN}, $\overline{FORCEOFF}$, FORCEON . . . . . -0.3V to 6V
  R_{IN} . . . . . ±25V
Output Voltages
  T_{OUT} . . . . . ±13.2V
  R_{OUT}, $\overline{INVALID}$, READY . . . . . -0.3V to V_{CC} +0.3V
Short Circuit Duration
  T_{OUT} . . . . . Continuous
ESD Rating . . . . . See Specification Table

Thermal Information

Thermal Resistance (Typical, Note 1)	θ_{JA} (°C/W)
28 Ld SOIC Package	75
16 Ld SSOP Package	140
20 Ld SSOP Package	125
28 Ld SSOP Package	100

Maximum Junction Temperature (Plastic Package) . . . . . 150°C
Maximum Storage Temperature Range . . . . . -65°C to 150°C
Maximum Lead Temperature (Soldering 10s) . . . . . 300°C
  (Lead Tips Only)

Operating Conditions

Temperature Range
  ICL32XXEC . . . . . 0°C to 70°C
  ICL32XXEI . . . . . -40°C to 85°C

CAUTION: Stresses above those listed in "Absolute Maximum Ratings" may cause permanent damage to the device. This is a stress only rating and operation of the device at these or any other conditions above those indicated in the operational sections of this specification is not implied.

NOTE:

1. θ_{JA} is measured with the component mounted on a low effective thermal conductivity test board in free air. See Tech Brief TB379 for details.

Electrical Specifications

Test Conditions: V_{CC} = 3V to 5.5V, C_1 - C_4 = 0.1µF; Unless Otherwise Specified.
Typicals are at T_A = 25°C

PARAMETER	TEST CONDITIONS		TEMP (°C)	MIN	TYP	MAX	UNITS
DC CHARACTERISTICS							
Supply Current, Automatic Powerdown	All R_{IN} Open, FORCEON = GND, $\overline{FORCEOFF}$ = V_{CC}		25	-	1.0	10	µA
Supply Current, Powerdown	$\overline{FORCEOFF}$ = GND		25	-	1.0	10	µA
Supply Current, Automatic Powerdown Disabled	All Outputs Unloaded, FORCEON = $\overline{FORCEOFF}$ = V_{CC}		25	-	0.3	1.0	mA
LOGIC AND TRANSMITTER INPUTS AND RECEIVER OUTPUTS							
Input Logic Threshold Low	T_{IN}, FORCEON, $\overline{FORCEOFF}$		Full	-	-	0.8	V
Input Logic Threshold High	T_{IN}, FORCEON, $\overline{FORCEOFF}$	V_{CC} = 3.3V	Full	2.0	-	-	V
		V_{CC} = 5.0V	Full	2.4	-	-	V
Transmitter Input Hysteresis			25	-	0.5	-	V
Input Leakage Current	T_{IN}, FORCEON, $\overline{FORCEOFF}$		Full	-	±0.01	±1.0	µA
Output Leakage Current	$\overline{FORCEOFF}$ = GND, ICL3244E Only		Full	-	±0.05	±10	µA
Output Voltage Low	I_{OUT} = 1.6mA		Full	-	-	0.4	V
Output Voltage High	I_{OUT} = -1.0mA		Full	V_{CC} -0.6	V_{CC} -0.1	-	V
RECEIVER INPUTS							
Input Voltage Range			Full	-25	-	25	V
Input Threshold Low	V_{CC} = 3.3V		25	0.6	1.2	-	V
	V_{CC} = 5.0V		25	0.8	1.5	-	V

Electrical Specifications Test Conditions: V_{CC} = 3V to 5.5V, C_1 - C_4 = 0.1µF; Unless Otherwise Specified. Typicals are at T_A = 25°C **(Continued)**

PARAMETER	TEST CONDITIONS		TEMP (°C)	MIN	TYP	MAX	UNITS
Input Threshold High	V_{CC} = 3.3V		25	-	1.5	2.4	V
	V_{CC} = 5.0V		25	-	1.8	2.4	V
Input Hysteresis			25	-	0.5	-	V
Input Resistance			25	3	5	7	kΩ
TRANSMITTER OUTPUTS							
Output Voltage Swing	All Transmitter Outputs Loaded with 3kΩ to Ground		Full	±5.0	±5.4	-	V
Output Resistance	V_{CC} = V+ = V- = 0V, Transmitter Output = ±2V		Full	300	10M	-	Ω
Output Short-Circuit Current			Full	-	±35	±60	mA
Output Leakage Current	V_{OUT} = ±12V, V_{CC} = 0V or 3V to 5.5V Automatic Powerdown or $\overline{\text{FORCEOFF}}$ = GND		Full	-	-	±25	µA
MOUSE DRIVEABILITY (ICL3244E Only)							
Transmitter Output Voltage (See Figure 11)	$T1_{IN}$ = $T2_{IN}$ = GND, $T3_{IN}$ = V_{CC}, $T3_{OUT}$ Loaded with 3kΩ to GND, $T1_{OUT}$ and $T2_{OUT}$ Loaded with 2.5mA Each		Full	±5	-	-	V
ENHANCED AUTOMATIC POWERDOWN (FORCEON = GND, $\overline{\text{FORCEOFF}}$ = V_{CC})							
Receiver Input Thresholds to $\overline{\text{INVALID}}$ High	See Figure 6		Full	-2.7	-	2.7	V
Receiver Input Thresholds to $\overline{\text{INVALID}}$ Low	See Figure 6		Full	-0.3	-	0.3	V
$\overline{\text{INVALID}}$, READY Output Voltage Low	I_{OUT} = 1.6mA		Full	-	-	0.4	V
$\overline{\text{INVALID}}$, READY Output Voltage High	I_{OUT} = -1.0mA		Full	V_{CC}-0.6	-	-	V
Receiver Positive or Negative Threshold to $\overline{\text{INVALID}}$ High Delay (t_{INVH})			25	-	1	-	µs
Receiver Positive or Negative Threshold to $\overline{\text{INVALID}}$ Low Delay (t_{INVL})			25	-	30	-	µs
Receiver or Transmitter Edge to Transmitters Enabled Delay (t_{WU})	Note 2		25	-	100	-	µs
Receiver or Transmitter Edge to Transmitters Disabled Delay ($t_{AUTOPWDN}$)	Note 2		Full	15	30	60	sec
TIMING CHARACTERISTICS							
Maximum Data Rate	R_L = 3kΩ, C_L = 1000pF, One Transmitter Switching		Full	250	500	-	kbps
Receiver Propagation Delay	Receiver Input to Receiver Output, C_L = 150pF	t_{PHL}	25	-	0.15	-	µs
		t_{PLH}	25	-	0.15	-	µs
Receiver Output Enable Time	Normal Operation (ICL3244E Only)		25	-	200	-	ns
Receiver Output Disable Time	Normal Operation (ICL3244E Only)		25	-	200	-	ns
Transmitter Skew	t_{PHL} - t_{PLH}		25	-	100	-	ns

Electrical Specifications Test Conditions: V_{CC} = 3V to 5.5V, C_1 - C_4 = 0.1µF; Unless Otherwise Specified. Typicals are at T_A = 25°C **(Continued)**

PARAMETER	TEST CONDITIONS		TEMP (°C)	MIN	TYP	MAX	UNITS
Receiver Skew	t_{PHL} - t_{PLH}		25	-	50	-	ns
Transition Region Slew Rate	V_{CC} = 3.3V, R_L = 3kΩ to 7kΩ, Measured From 3V to -3V or -3V to 3V	C_L = 150pF to 1000pF	25	6	-	30	V/µs
		C_L = 150pF to 2500pF	25	4	8	30	V/µs
ESD PERFORMANCE							
RS-232 Pins (T_{OUT}, R_{IN})	Human Body Model		25	-	±15	-	kV
	IEC61000-4-2 Contact Discharge		25	-	±8	-	kV
	IEC61000-4-2 Air Gap Discharge		25	-	±15	-	kV
All Other Pins	Human Body Model		25	-	±3	-	kV

NOTE:

2. An “edge” is defined as a transition through the transmitter or receiver input thresholds.

Detailed Description

These ICL32XXE interface ICs operate from a single +3V to +5.5V supply, guarantee a 250kbps minimum data rate, require only four small external 0.1µF capacitors, feature low power consumption, and meet all EIA RS-232C and V.28 specifications. The circuit is divided into three sections: The charge pump, the transmitters, and the receivers.

Charge-Pump

Intersil’s new ICL32XXE family utilizes regulated on-chip dual charge pumps as voltage doublers, and voltage inverters to generate ±5.5V transmitter supplies from a V_{CC} supply as low as 3.0V. This allows these devices to maintain RS-232 compliant output levels over the ±10% tolerance range of 3.3V powered systems. The efficient on-chip power supplies require only four small, external 0.1µF capacitors for the voltage doubler and inverter functions at V_{CC} = 3.3V. See the “Capacitor Selection” section, and Table 3 for capacitor recommendations for other operating conditions. The charge pumps operate discontinuously (i.e., they turn off as soon as the V+ and V- supplies are pumped up to the nominal values), resulting in significant power savings.

Transmitters

The transmitters are proprietary, low dropout, inverting drivers that translate TTL/CMOS inputs to EIA/TIA-232 output levels. Coupled with the on-chip ±5.5V supplies, these transmitters deliver true RS-232 levels over a wide range of single supply system voltages.

Transmitter outputs disable and assume a high impedance state when the device enters the powerdown mode (see Table 2). These outputs may be driven to ±12V when disabled.

All devices guarantee a 250kbps data rate for full load conditions (3kΩ and 1000pF), $V_{CC} \geq$ 3.0V, with one transmitter operating at full speed. Under more typical conditions of $V_{CC} \geq$ 3.3V, R_L = 3kΩ, and C_L = 250pF, one transmitter easily operates at 1Mbps.

Transmitter inputs float if left unconnected, and may cause I_{CC} increases. Connect unused inputs to GND for the best performance.

Receivers

All the ICL32XXE devices contain standard inverting receivers, but only the ICL3244E receivers can three-state, via the $\overline{\text{FORCEOFF}}$ control line. Additionally, the ICL3244E includes a noninverting (monitor) receiver (denoted by the R_{OUTB} label) that is always active, regardless of the state of any control lines. Both receiver types convert RS-232 signals to CMOS output levels and accept inputs up to ±25V while presenting the required 3kΩ to 7kΩ input impedance (see Figure 1) even if the power is off (V_{CC} = 0V). The receivers’ Schmitt trigger input stage uses hysteresis to increase noise immunity and decrease errors due to slow input signal transitions.

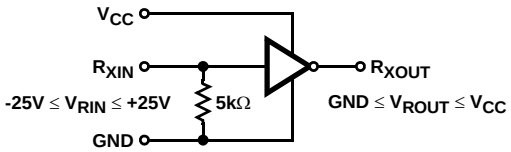

FIGURE 1. INVERTING RECEIVER CONNECTIONS

The ICL3244E inverting receivers disable during forced (manual) powerdown, but not during automatic powerdown (see Table 2). Conversely, the monitor receiver remains active even during manual powerdown making it extremely useful for Ring Indicator monitoring. Standard receivers driving powered down peripherals must be disabled to prevent current flow through the peripheral's protection diodes (see Figures 2 and 3). This renders them useless for wake up functions, but the corresponding monitor receiver can be dedicated to this task as shown in Figure 3.

TABLE 2. POWERDOWN LOGIC TRUTH TABLE

RCVR OR XMTR EDGE WITHIN 30 SEC?	$\overline{\text{FORCEOFF}}$ INPUT	FORCEON INPUT	TRANSMITTER OUTPUTS	RECEIVER OUTPUTS	(NOTE 3) R_{OUTB} OUTPUTS	RS-232 LEVEL PRESENT AT RECEIVER INPUT?	$\overline{\text{INVALID}}$ OUTPUT	MODE OF OPERATION
ICL3224E, ICL3226E								
NO	H	H	Active	Active	N.A.	NO	L	Normal Operation (Enhanced Auto Powerdown Disabled)
NO	H	H	Active	Active	N.A.	YES	H	
YES	H	L	Active	Active	N.A.	NO	L	Normal Operation (Enhanced Auto Powerdown Enabled)
YES	H	L	Active	Active	N.A.	YES	H	
NO	H	L	High-Z	Active	N.A.	NO	L	Powerdown Due to Enhanced Auto Powerdown Logic
NO	H	L	High-Z	Active	N.A.	YES	H	
X	L	X	High-Z	Active	N.A.	NO	L	Manual Powerdown
X	L	X	High-Z	Active	N.A.	YES	H	
ICL322XE - $\overline{\text{INVALID}}$ DRIVING FORCEON AND $\overline{\text{FORCEOFF}}$ (EMULATES AUTOMATIC POWERDOWN)								
X	NOTE 4	NOTE 4	Active	Active	N.A.	YES	H	Normal Operation
X	NOTE 4	NOTE 4	High-Z	Active	N.A.	NO	L	Forced Auto Powerdown
ICL3244E								
NO	H	H	Active	Active	Active	NO	L	Normal Operation (Enhanced Auto Powerdown Disabled)
NO	H	H	Active	Active	Active	YES	H	
YES	H	L	Active	Active	Active	NO	L	Normal Operation (Enhanced Auto Powerdown Enabled)
YES	H	L	Active	Active	Active	YES	H	
NO	H	L	High-Z	Active	Active	NO	L	Powerdown Due to Enhanced Auto Powerdown Logic
NO	H	L	High-Z	Active	Active	YES	H	
X	L	X	High-Z	High-Z	Active	NO	L	Manual Powerdown
X	L	X	High-Z	High-Z	Active	YES	H	
ICL3244E - $\overline{\text{INVALID}}$ DRIVING FORCEON AND $\overline{\text{FORCEOFF}}$ (EMULATES AUTOMATIC POWERDOWN)								
X	NOTE 4	NOTE 4	Active	Active	Active	YES	H	Normal Operation
X	NOTE 4	NOTE 4	High-Z	High-Z	Active	NO	L	Forced Auto Powerdown

NOTES:

3. Applies only to the ICL3244E.
4. Input is connected to $\overline{\text{INVALID}}$ Output.

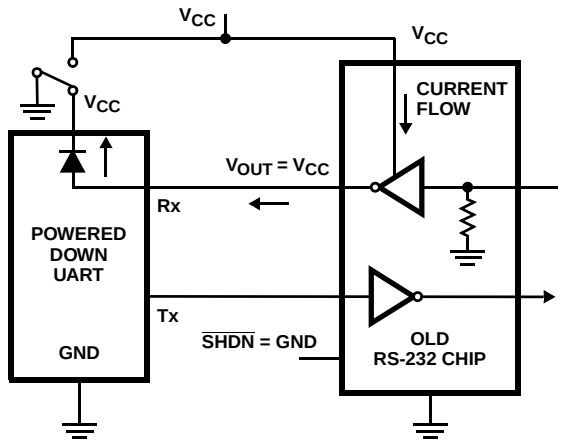

FIGURE 2. POWER DRAIN THROUGH POWERED DOWN PERIPHERAL

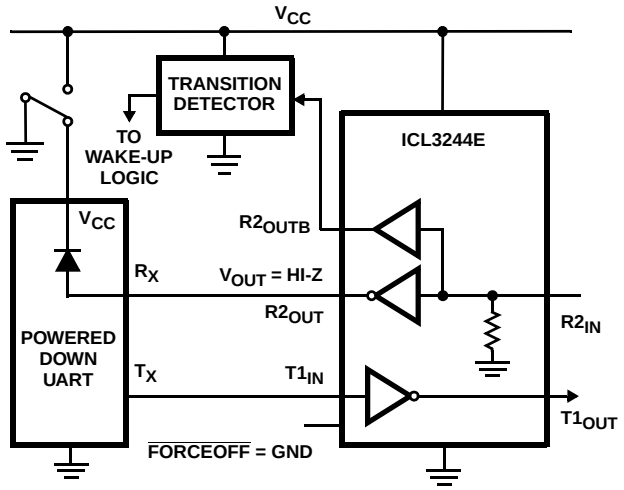

FIGURE 3. DISABLED RECEIVERS PREVENT POWER DRAIN

Powerdown Functionality

This 3V family of RS-232 interface devices requires a nominal supply current of 0.3mA during normal operation (not in powerdown mode). This is considerably less than the 5mA to 11mA current required of 5V RS-232 devices. The already low current requirement drops significantly when the device enters powerdown mode. In powerdown, supply current drops to 1µA, because the on-chip charge pump turns off (V+ collapses to V_{CC}, V- collapses to GND), and the transmitter outputs three-state. Inverting receiver outputs may or may not disable in powerdown; refer to Table 2 for details. This micro-power mode makes these devices ideal for battery powered and portable applications.

Software Controlled (Manual) Powerdown

These devices allow the user to force the IC into the low power, standby state, and utilize a two pin approach where the FORCEON and $\overline{\text{FORCEOFF}}$ inputs determine the IC's mode. For always enabled operation, FORCEON and $\overline{\text{FORCEOFF}}$ are both strapped high. To switch between active and powerdown modes, under logic or software control, only the $\overline{\text{FORCEOFF}}$ input need be driven. The FORCEON state isn't critical, as $\overline{\text{FORCEOFF}}$ dominates over FORCEON. Nevertheless, if strictly manual control over powerdown is desired, the user must strap FORCEON high to disable the enhanced automatic powerdown circuitry. ICL3244E inverting (standard) receiver outputs also disable when the device is in powerdown, thereby eliminating the possible current path through a shutdown peripheral's input protection diode (see Figures 2 and 3).

Connecting $\overline{\text{FORCEOFF}}$ and FORCEON together disables the enhanced automatic powerdown feature, enabling them to function as a manual $\overline{\text{SHUTDOWN}}$ input (see Figure 4).

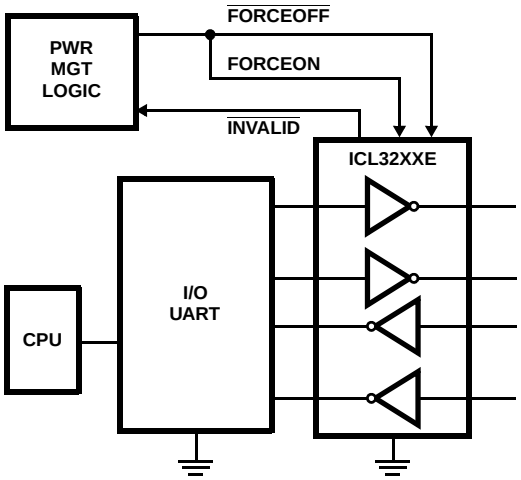

FIGURE 4. CONNECTIONS FOR MANUAL POWERDOWN WHEN NO VALID RECEIVER SIGNALS ARE PRESENT

With any of the above control schemes, the time required to exit powerdown, and resume transmission is only 100µs.

When using both manual and enhanced automatic powerdown (FORCEON = 0), the ICL32XXE won't power up from manual powerdown until both $\overline{\text{FORCEOFF}}$ and FORCEON are driven high, or until a transition occurs on a receiver or transmitter input. Figure 5 illustrates a circuit for ensuring that the ICL32XXE powers up as soon as $\overline{\text{FORCEOFF}}$ switches high. The rising edge of the Master Powerdown signal forces the device to power up, and the ICL32XXE returns to enhanced automatic powerdown mode an RC time constant after this rising edge. The time constant isn't critical, because the ICL32XXE remains powered up for 30 seconds after the FORCEON falling edge, even if there are no signal transitions. This gives slow-to-wake systems (e.g., a mouse) plenty of time to start transmitting, and as long as it starts transmitting within 30 seconds both systems remain enabled.