查询M68AW512供应商 捷多邦，专业PCB打样工厂，24小时加急出货

M68AW512M

8 Mbit (512K x16) 3.0V Asynchronous SRAM

FEATURES SUMMARY

- SUPPLY VOLTAGE: 2.7 to 3.6V
- 512K x 16 bits SRAM with OUTPUT ENABLE
- EQUAL CYCLE and ACCESS TIME: 55ns
- SINGLE BYTE READ/WRITE
- LOW STANDBY CURRENT
- LOW V_{CC} DATA RETENTION: 1.5V
- TRI-STATE COMMON I/O
- AUTOMATIC POWER DOWN

Figure 1. Package

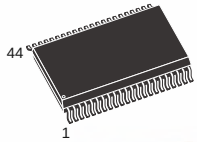

TSOP44 Type II (ND)

找pdf 维库一下 pdf.dzsc.com

TABLE OF CONTENTS

FEATURES SUMMARY 1

Figure 1. Package. 1

SUMMARY DESCRIPTION. 3

Figure 2. Logic Diagram 3
Table 1. Signal Names 3
Figure 3. TSOP Connections 4
Figure 4. Block Diagram 5

OPERATION 6

Read Mode 6
Write Mode 6
Table 2. Operating Modes 6

MAXIMUM RATING. 7

Table 3. Absolute Maximum Ratings 7

DC AND AC PARAMETERS. 8

Table 4. Operating and AC Measurement Conditions 8
Figure 5. AC Measurement I/O Waveform 8
Figure 6. AC Measurement Load Circuit. 8
Table 5. Capacitance. 9
Table 6. DC Characteristics 9
Figure 7. Address Controlled, Read Mode AC Waveforms 10
Figure 8. Chip Enable or Output Enable Controlled, Read Mode AC Waveforms.. 10
Figure 9. Chip Enable or $\overline{UB}$/$\overline{LB}$ Controlled, Standby Mode AC Waveforms 10
Table 7. Read and Standby Mode AC Characteristics 11
Figure 10.Write Enable Controlled, Write AC Waveforms. 12
Figure 11.Chip Enable Controlled, Write AC Waveforms 12
Figure 12.$\overline{UB}$/$\overline{LB}$ Controlled, Write AC Waveforms 13
Table 8. Write Mode AC Characteristics 14
Figure 13.Low V_{CC} Data Retention AC Waveforms 15
Table 9. Low V_{CC} Data Retention Characteristics. 15

PACKAGE MECHANICAL 16

Figure 14.TSOP44 Type II - 44 lead Plastic Thin Small Outline Type II, Package Outline 16
Table 10. TSOP 44 TypeII - 44 lead Plastic Thin Small Outline TypeII, Package Mechanical Data 16

PART NUMBERING 17

Table 11. Ordering Information Scheme 17

REVISION HISTORY. 18

Table 12. Document Revision History 18

SUMMARY DESCRIPTION

The M68AW512M is a 8 Mbit (8,388,608 bit) CMOS SRAM, organized as 524,288 words by 16 bits. The device features fully static operation requiring no external clocks or timing strobes, with equal address access and cycle times. It requires a single 2.7 to 3.6V supply. This device has an automatic power-down feature, reducing the power consumption by over 99% when deselected.

The M68AW512M is available in TSOP44 Type II packages.

Figure 2. Logic Diagram

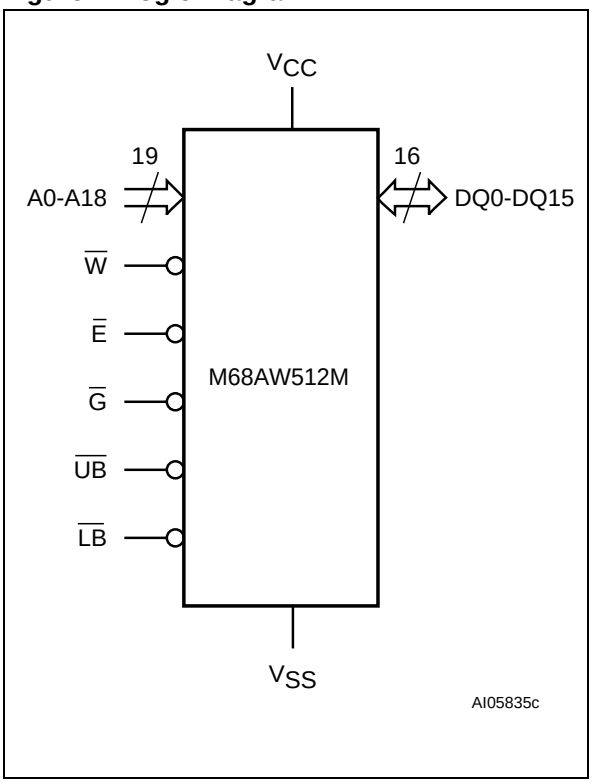

Table 1. Signal Names

A0-A16	Address Inputs
DQ0-DQ15	Data Input/Output
$\overline{E}$	Chip Enable
$\overline{G}$	Output Enable
$\overline{W}$	Write Enable
$\overline{UB}$	Upper Byte Enable Input
$\overline{LB}$	Lower Byte Enable Input
V_{CC}	Supply Voltage
V_{SS}	Ground
NC	Not Connected Internally
DU	Don't Use as Internally Connected

Figure 3. TSOP Connections

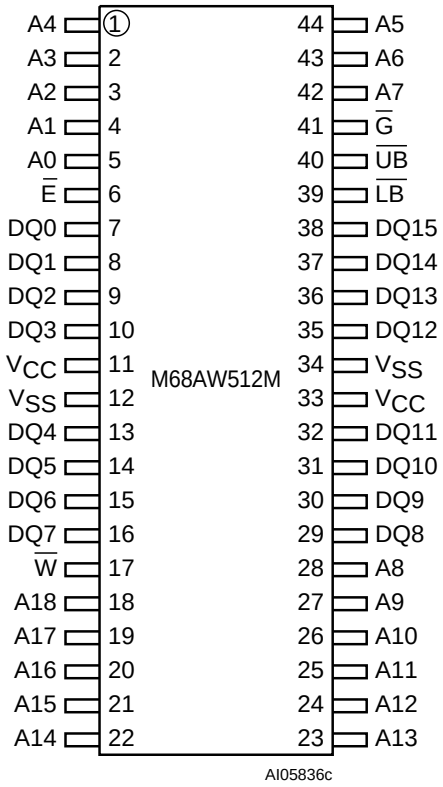

Figure 4. Block Diagram

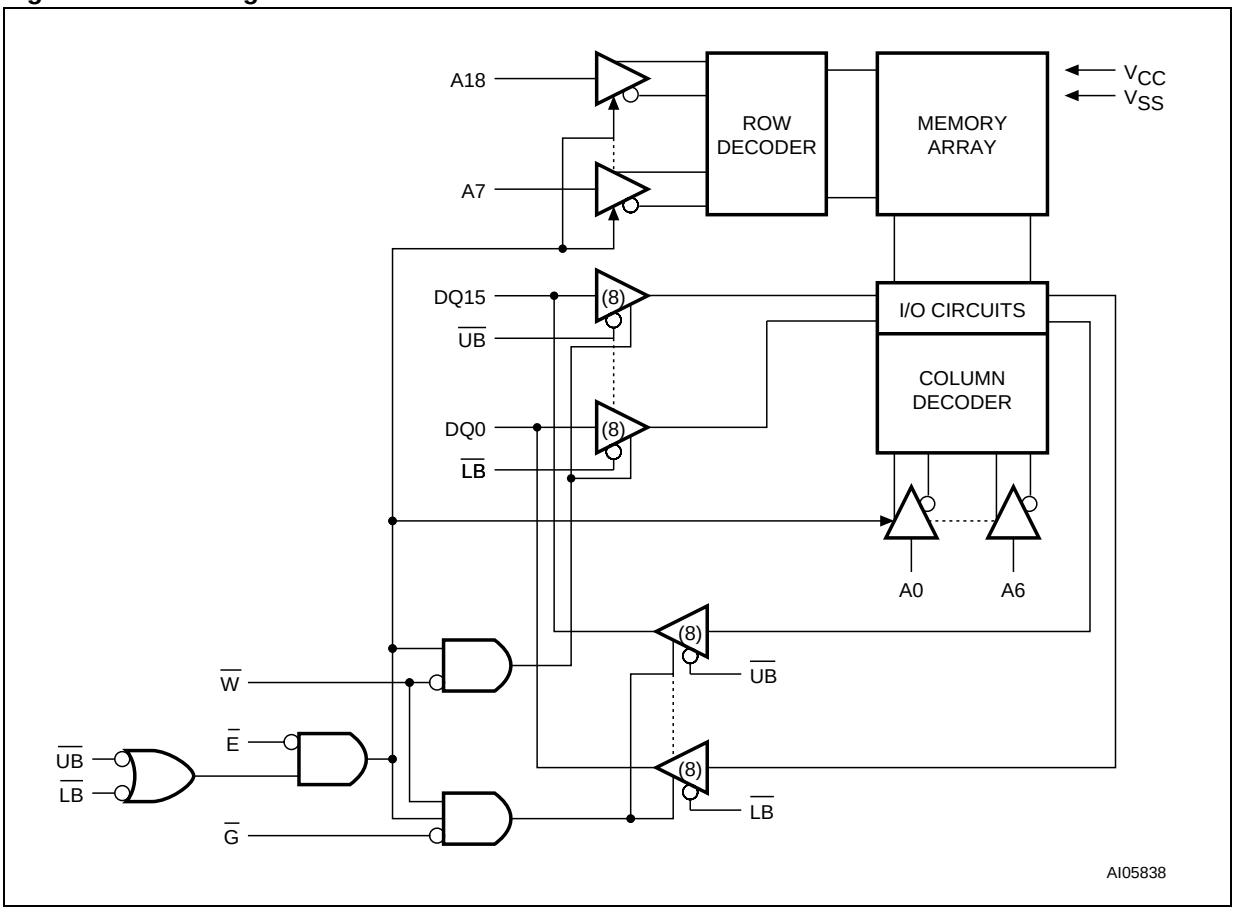

OPERATION

The M68AW512M has a Chip Enable power down feature which invokes an automatic standby mode whenever either Chip Enable is de-asserted ($\overline{E}$ = High) or $\overline{LB}$ and $\overline{UB}$ are de-asserted ($\overline{LB}$ and $\overline{UB}$ = High). An Output Enable ($\overline{G}$) signal provides a high speed tri-state control, allowing fast read/write cycles to be achieved with the common I/O data bus. Operational modes are determined by device control inputs W, $\overline{E}$, $\overline{LB}$ and $\overline{UB}$ as summarized in the Operating Modes table (see Table 2).

Read Mode

The M68AW512M is in the Read mode whenever Write Enable ($\overline{W}$) is High with Output Enable ($\overline{G}$) Low, and Chip Enable ($\overline{E}$) is asserted. This provides access to data from eight or sixteen, depending on the status of the signal $\overline{UB}$ and $\overline{LB}$, of the 8,388,608 locations in the static memory array, specified by the 19 address inputs. Valid data will be available at the eight or sixteen output pins within t_{AVQV} after the last stable address, providing $\overline{G}$ is Low and $\overline{E}$ is Low. If Chip Enable or Output Enable access times are not met, data access will be measured from the limiting parameter (t_{ELQV}, t_{GLQV} or t_{BLQV}) rather than the address. Data out may be indeterminate at t_{ELQX}, t_{GLQX} and t_{BLQX} but data lines will always be valid at t_{AVQV}.

Write Mode

The M68AW512M is in the Write mode whenever the $\overline{W}$ and $\overline{E}$ are Low. Either the Chip Enable input ($\overline{E}$) or the Write Enable input ($\overline{W}$) must be de-asserted during Address transitions for subsequent write cycles. When $\overline{E}$ ($\overline{W}$) is Low, and $\overline{UB}$ or $\overline{LB}$ is Low, write cycle begins on the $\overline{W}$ ($\overline{E}$)'s falling edge. When $\overline{E}$ and $\overline{W}$ are Low, and $\overline{UB}$ = $\overline{LB}$ = High, write cycle begins on the first falling edge of $\overline{UB}$ or $\overline{LB}$. Therefore, address setup time is referenced to Write Enable, Chip Enable or $\overline{UB}$/$\overline{LB}$ as t_{AVWL}, t_{AVEL} and t_{AVBL} respectively, and is determined by the latter occurring edge.

The Write cycle can be terminated by the earlier rising edge of $\overline{E}$, $\overline{W}$ or $\overline{UB}$/$\overline{LB}$.

If the Output is enabled ($\overline{E}$ = Low, $\overline{G}$ = Low, $\overline{LB}$ or $\overline{UB}$ = Low), then $\overline{W}$ will return the outputs to high impedance within t_{WLQZ} of its falling edge. Care must be taken to avoid bus contention in this type of operation. Data input must be valid for t_{DVWH} before the rising edge of Write Enable, or for t_{DVEH} before the rising edge of $\overline{E}$, or for t_{DVBH} before the rising edge of $\overline{UB}$/$\overline{LB}$ whichever occurs first, and remain valid for t_{WHDX}, t_{EHDX} and t_{BHDX} respectively.

Table 2. Operating Modes

Operation	$\overline{E}$	$\overline{W}$	$\overline{G}$	$\overline{LB}$	$\overline{UB}$	DQ0-DQ7	DQ8-DQ15	Power
Deselected	V_{IH}	X	X	X	X	Hi-Z	Hi-Z	Standby (I_{SB})
Deselected	X	X	X	V_{IH}	V_{IH}	Hi-Z	Hi-Z	Standby (I_{SB})
Lower Byte Read	V_{IL}	V_{IH}	V_{IL}	V_{IL}	V_{IH}	Data Output	Hi-Z	Active (I_{CC})
Lower Byte Write	V_{IL}	V_{IL}	X	V_{IL}	V_{IH}	Data Input	Hi-Z	Active (I_{CC})
Output Disabled	V_{IL}	V_{IH}	V_{IH}	X	X	Hi-Z	Hi-Z	Active (I_{CC})
Upper Byte Read	V_{IL}	V_{IH}	V_{IL}	V_{IH}	V_{IL}	Hi-Z	Data Output	Active (I_{CC})
Upper Byte Write	V_{IL}	V_{IL}	X	V_{IH}	V_{IL}	Hi-Z	Data Input	Active (I_{CC})
Word Read	V_{IL}	V_{IH}	V_{IL}	V_{IL}	V_{IL}	Data Output	Data Output	Active (I_{CC})
Word Write	V_{IL}	V_{IL}	X	V_{IL}	V_{IL}	Data Input	Data Input	Active (I_{CC})

Note: 1. X = V_{IH} or V_{IL}.

MAXIMUM RATING

Stressing the device above the rating listed in the Absolute Maximum Ratings table may cause permanent damage to the device. These are stress ratings only and operation of the device at these or any other conditions above those indicated in the Operating sections of this specification is not implied. Exposure to Absolute Maximum Rating conditions for periods greater than 1 sec periods may affect device reliability. Refer also to the STMicroelectronics SURE Program and other relevant quality documents.

Table 3. Absolute Maximum Ratings

Symbol	Parameter	Value	Unit
I_O (1)	Output Current	20	mA
T_A	Ambient Operating Temperature	–55 to 125	°C
T_{STG}	Storage Temperature	–65 to 150	°C
V_{CC}	Supply Voltage	–0.5 to 4.6	V
V_{IO} (2)	Input or Output Voltage	–0.5 to V_{CC} +0.5	V
P_D	Power Dissipation	1	W

Note: 1. One output at a time, not to exceed 1 second duration.
2. Up to a maximum operating V_{CC} of 3.6V only.

DC AND AC PARAMETERS

This section summarizes the operating and measurement conditions, as well as the DC and AC characteristics of the device. The parameters in the following DC and AC Characteristic tables are derived from tests performed under the Measurement Conditions listed in the relevant tables. Designers should check that the operating conditions in their projects match the measurement conditions when using the quoted parameters.

Table 4. Operating and AC Measurement Conditions

Parameter		M68AW512M
V_{CC} Supply Voltage		2.7 to 3.6V
Ambient Operating Temperature	Range 1	0 to 70°C
	Range 6	–40 to 85°C
Load Capacitance (C_L)		30pF
Output Circuit Protection Resistance (R_1)		3.0kΩ
Load Resistance (R_2)		3.1kΩ
Input Rise and Fall Times		≤ 1ns/V
Input Pulse Voltages		0 to V_{CC}
Input and Output Timing Ref. Voltages		$V_{CC}/2$
Output Transition Timing Ref. Voltages		$V_{RL} = 0.3V_{CC}$; $V_{RH} = 0.7V_{CC}$

Figure 5. AC Measurement I/O Waveform

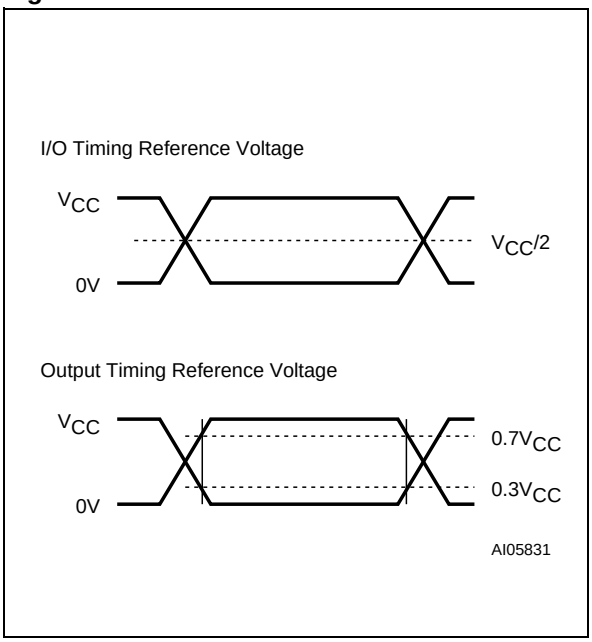

Figure 6. AC Measurement Load Circuit

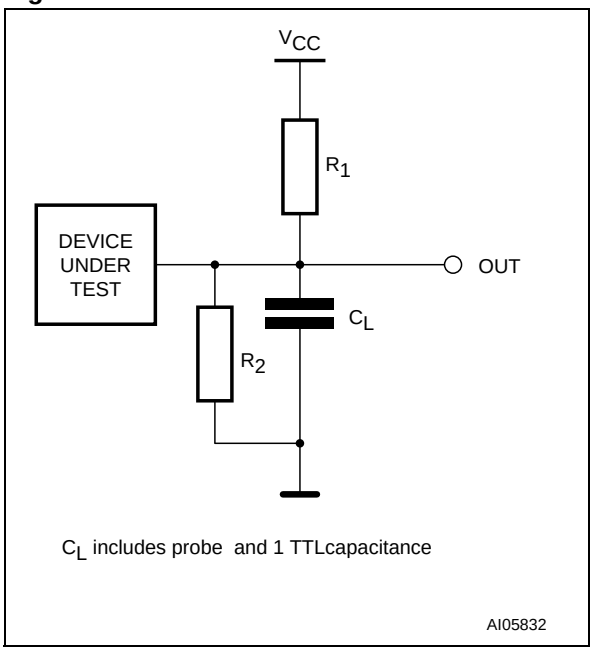

Table 5. Capacitance

Symbol	Parameter(1,2)	Test Condition	Min	Max	Unit
C_{IN}	Input Capacitance on all pins (except DQ)	V_{IN} = 0V		8	pF
C_{OUT}	Output Capacitance	V_{OUT} = 0V		10	pF

Note: 1. Sampled only, not 100% tested.
2. At T_A = 25°C, f = 1 MHz, V_{CC} = 3.0V.

Table 6. DC Characteristics

Symbol	Parameter	Test Condition		Min	Typ	Max	Unit
I_{CC1} (1,2)	Operating Supply Current	V_{CC} = 3.6V, f = 1/t_{AVAV}, I_{OUT} = 0mA	70ns			35	mA
			55ns			40	mA
I_{CC2} (3)	Operating Supply Current	V_{CC} = 3.6V, f = 1MHz, I_{OUT} = 0mA				4	mA
I_{SB}	Standby Supply Current CMOS	V_{CC} = 3.6V, f = 0, $\overline{E} \geq V_{CC}$ –0.2V or $\overline{LB}$=$\overline{UB} \geq V_{CC}$ –0.2V			1	20	µA
I_{LI}	Input Leakage Current	0V ≤ V_{IN} ≤ V_{CC}		–1		1	µA
I_{LO}	Output Leakage Current	0V ≤ V_{OUT} ≤ V_{CC} (4)		–1		1	µA
V_{IH}	Input High Voltage			2.2		V_{CC} + 0.3	V
V_{IL}	Input Low Voltage			–0.3		0.6	V
V_{OH}	Output High Voltage	I_{OH} = –1.0mA		2.4			V
V_{OL}	Output Low Voltage	I_{OL} = 2.1mA				0.4	V

Note: 1. Average AC current, cycling at t_{AVAV} minimum.
2. $\overline{E}$ = V_{IL}, $\overline{LB}$ OR/AND $\overline{UB}$ = V_{IL}, V_{IN} = V_{IL} OR V_{IH}.
3. $\overline{E}$ ≤ 0.2V, $\overline{LB}$ OR/AND $\overline{UB}$ ≤ 0.2V, V_{IN} ≤ 0.2V OR V_{IN} ≥ V_{CC} –0.2V.
4. Output disabled.

Figure 7. Address Controlled, Read Mode AC Waveforms

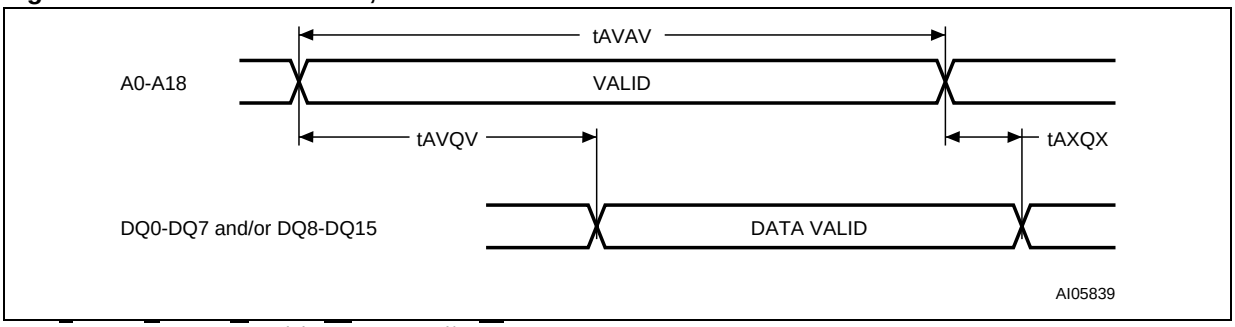

Note: $\overline{E}$ = Low, $\overline{G}$ = Low, $\overline{W}$ = High, $\overline{UB}$ = Low and/or $\overline{LB}$ = Low.

Figure 8. Chip Enable or Output Enable Controlled, Read Mode AC Waveforms.

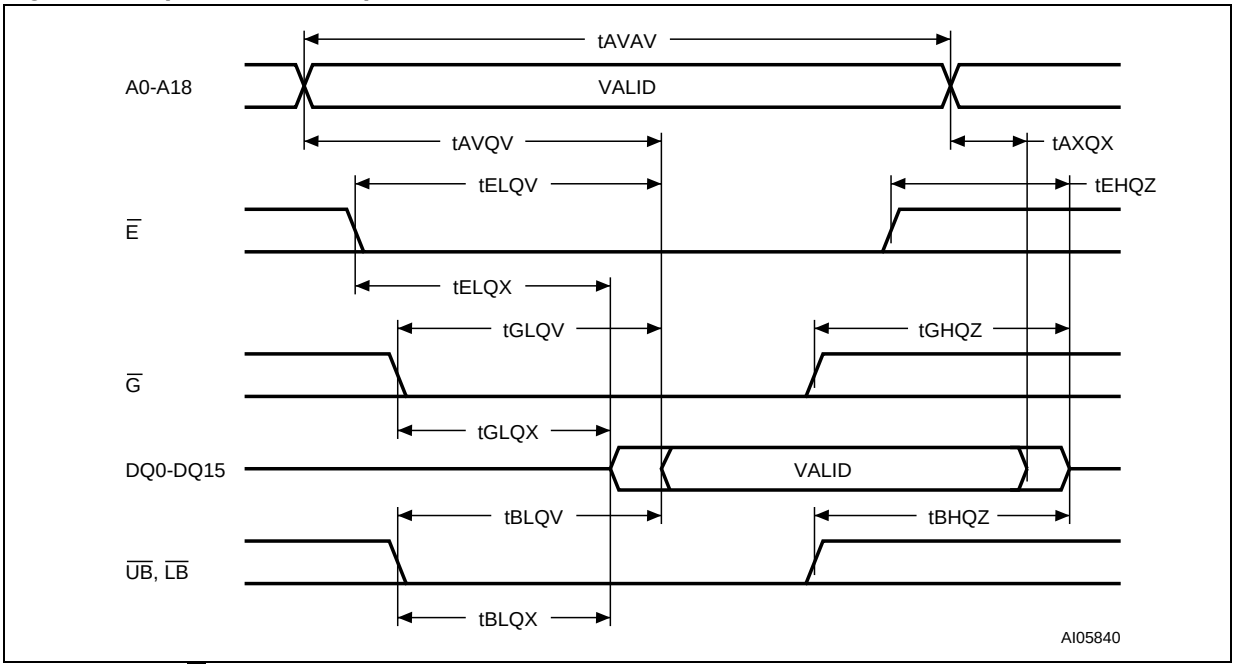

Note: Write Enable ($\overline{W}$) = High.

Figure 9. Chip Enable or $\overline{UB}$/$\overline{LB}$ Controlled, Standby Mode AC Waveforms

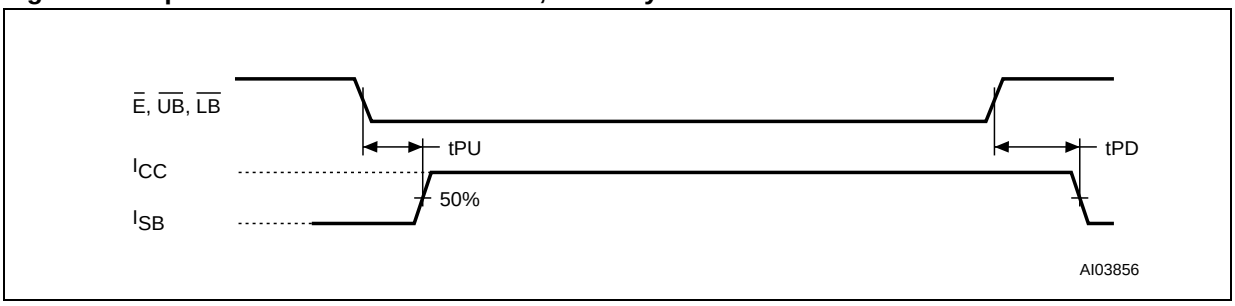

Table 7. Read and Standby Mode AC Characteristics

Symbol	Parameter		M68AW512M		Unit
			55	70	
t_{AVAV}	Read Cycle Time	Min	55	70	ns
t_{AVQV}	Address Valid to Output Valid	Max	55	70	ns
t_{AXQX} (1)	Data hold from address change	Min	5	5	ns
t_{BHQZ} (2,3)	Upper/Lower Byte Enable High to Output Hi-Z	Max	20	25	ns
t_{BLQV}	Upper/Lower Byte Enable Low to Output Valid	Max	55	70	ns
t_{BLQX} (1)	Upper/Lower Byte Enable Low to Output Transition	Min	5	5	ns
t_{EHQZ} (2,3)	Chip Enable High to Output Hi-Z	Max	20	25	ns
t_{ELQV}	Chip Enable Low to Output Valid	Max	55	70	ns
t_{ELQX} (1)	Chip Enable Low to Output Transition	Min	5	5	ns
t_{GHQZ} (2,3)	Output Enable High to Output Hi-Z	Max	20	25	ns
t_{GLQV}	Output Enable Low to Output Valid	Max	25	35	ns
t_{GLQX} (2)	Output Enable Low to Output Transition	Min	5	5	ns
t_{PD} (4)	Chip Enable or $\overline{UB}$/$\overline{LB}$ High to Power Down	Max	55	70	ns
t_{PU} (4)	Chip Enable or $\overline{UB}$/$\overline{LB}$ Low to Power Up	Min	0	0	ns

Note: 1. Test conditions assume transition timing reference level = $0.3V_{CC}$ or $0.7V_{CC}$.
2. At any given temperature and voltage condition, t_{GHQZ} is less than t_{GLQX}, t_{BHQZ} is less than t_{BLQX} and t_{EHQZ} is less than t_{ELQX} for any given device.
3. These parameters are defined as the time at which the outputs achieve the open circuit conditions and are not referenced to output voltage levels.
4. Tested initially and after any design or process changes that may affect these parameters.

Figure 10. Write Enable Controlled, Write AC Waveforms

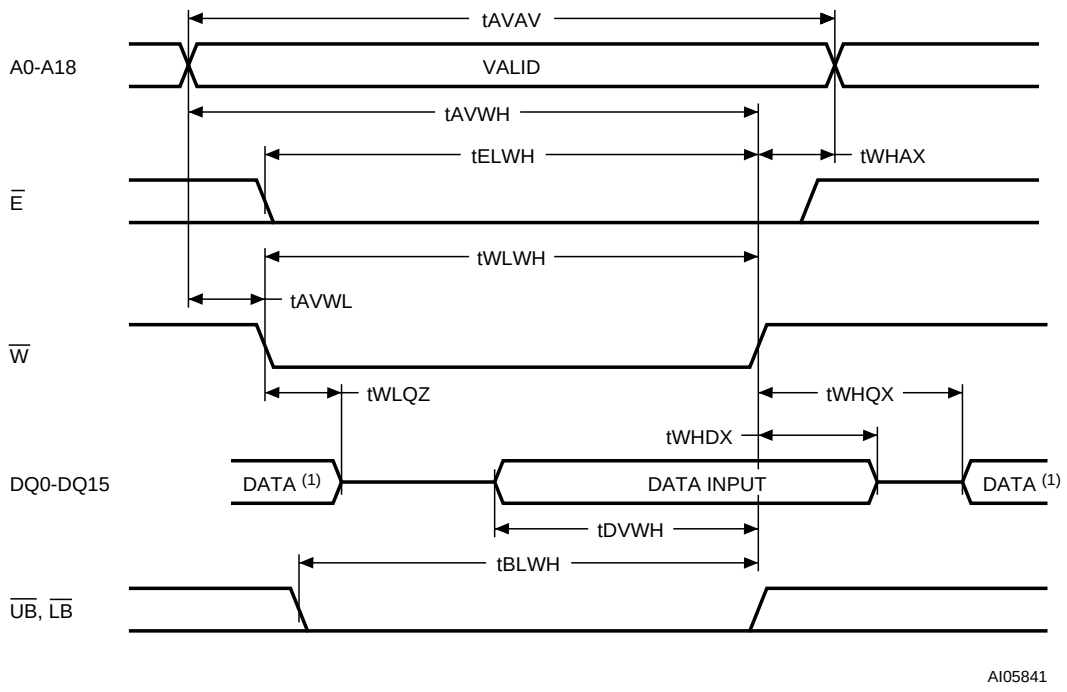

Note: 1. During this period DQ0-DQ15 are in output state and input signals should not be applied.

Figure 11. Chip Enable Controlled, Write AC Waveforms

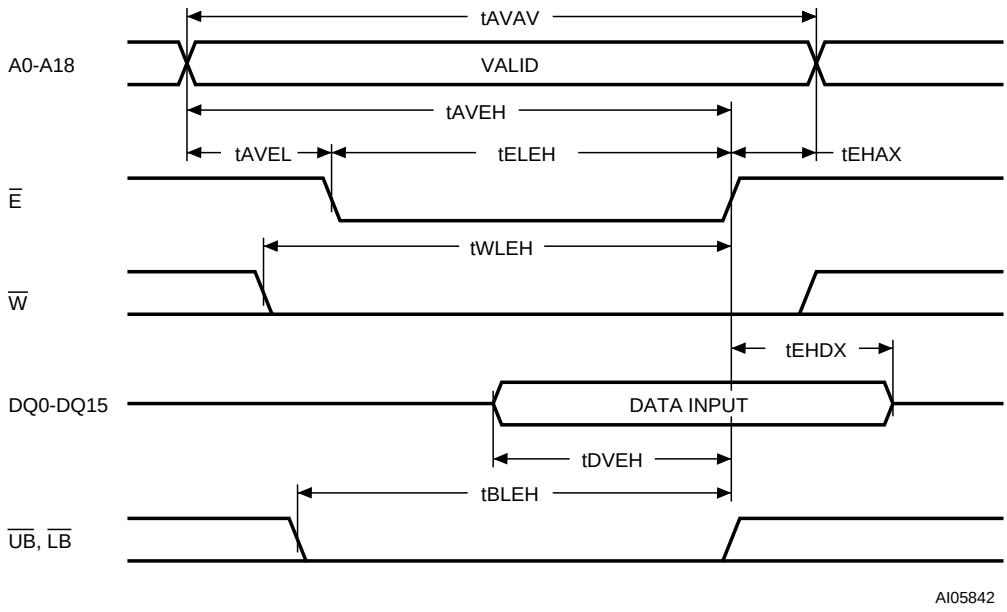

Figure 12. $\overline{UB}$/$\overline{LB}$ Controlled, Write AC Waveforms

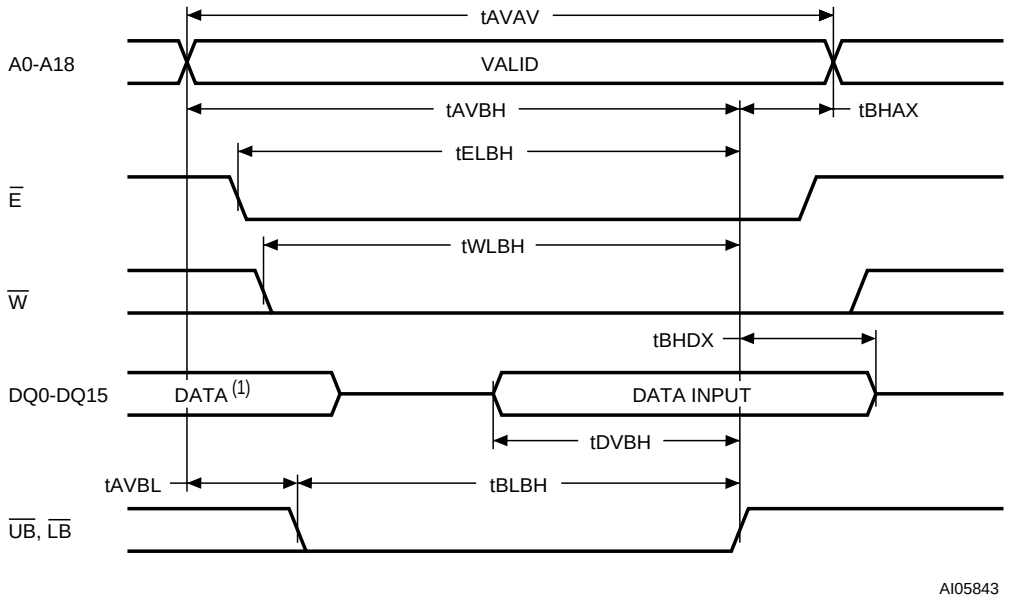

Note: 1. During this period DQ0-DQ15 are in output state and input signals should not be applied.

Table 8. Write Mode AC Characteristics

Symbol	Parameter		M68AW512M		Unit
			55	70	
t_{AVAV}	Write Cycle Time	Min	55	70	ns
t_{AVBH}	Address Valid to $\overline{LB}$, $\overline{UB}$ High	Min	45	60	ns
t_{AVBL}	Address Valid to $\overline{LB}$, $\overline{UB}$ Low	Min	0	0	ns
t_{AVEH}	Address Valid to Chip Enable High	Min	45	60	ns
t_{AVEL}	Address valid to Chip Enable Low	Min	0	0	ns
t_{AVWH}	Address Valid to Write Enable High	Min	45	60	ns
t_{AVWL}	Address Valid to Write Enable Low	Min	0	0	ns
t_{BHAX}	$\overline{LB}$, $\overline{UB}$ High to Address Transition	Min	0	0	ns
t_{BHDX}	$\overline{LB}$, $\overline{UB}$ High to Input Transition	Min	0	0	ns
t_{BLBH}	$\overline{LB}$, $\overline{UB}$ Low to $\overline{LB}$, $\overline{UB}$ High	Min	45	60	ns
t_{BLEH}	$\overline{LB}$, $\overline{UB}$ Low to Chip Enable High	Min	45	60	ns
t_{BLWH}	$\overline{LB}$, $\overline{UB}$ Low to Write Enable High	Min	45	60	ns
t_{DVBH}	Input Valid to $\overline{LB}$, $\overline{UB}$ High	Min	25	30	ns
t_{DVEH}	Input Valid to Chip Enable High	Min	25	30	ns
t_{DVWH}	Input Valid to Write Enable High	Min	25	30	ns
t_{EHAX}	Chip Enable High to Address Transition	Min	0	0	ns
t_{EHDX}	Chip enable High to Input Transition	Min	0	0	ns
t_{ELBH}	Chip Enable Low to $\overline{LB}$, $\overline{UB}$ High	Min	45	60	ns
t_{ELEH}	Chip Enable Low to Chip Enable High	Min	45	60	ns
t_{ELWH}	Chip Enable Low to Write Enable High	Min	45	60	ns
t_{WHAX}	Write Enable High to Address Transition	Min	0	0	ns
t_{WHDX}	Write Enable High to Input Transition	Min	0	0	ns
t_{WHQX} (1)	Write Enable High to Output Transition	Min	5	5	ns
t_{WLBH}	Write Enable Low to $\overline{LB}$, $\overline{UB}$ High	Min	45	60	ns
t_{WLEH}	Write Enable Low to Chip Enable High	Min	45	60	ns
t_{WLQZ} (1,2)	Write Enable Low to Output Hi-Z	Max	20	20	ns
t_{WLWH}	Write Enable Low to Write Enable High	Min	45	60	ns

Note: 1. At any given temperature and voltage condition, t_{WLQZ} is less than t_{WHQX} for any given device.
2. These parameters are defined as the time at which the outputs achieve the open circuit conditions and are not referenced to output voltage levels.

Figure 13. Low V_{CC} Data Retention AC Waveforms

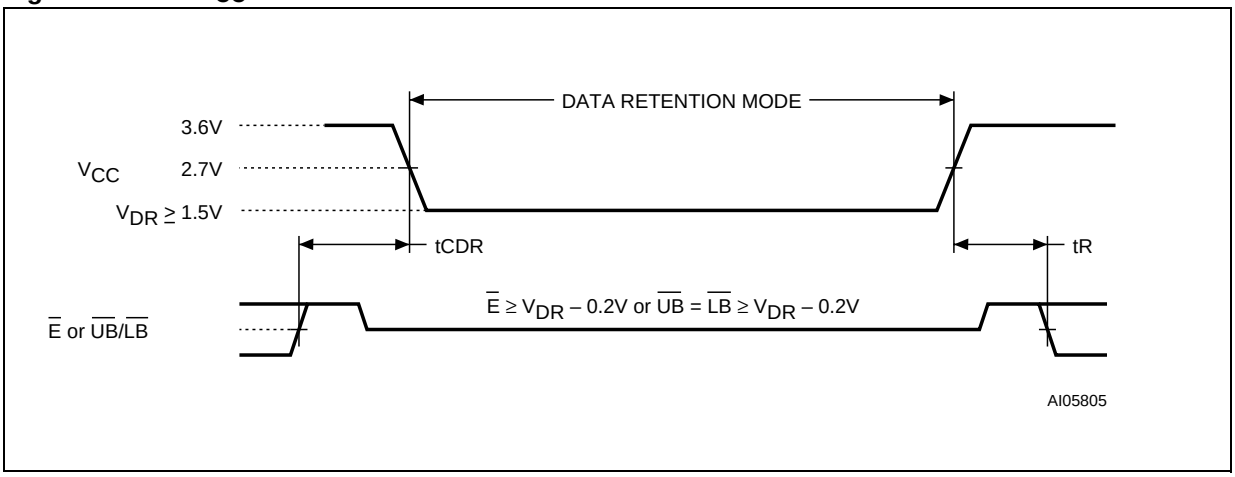

Table 9. Low V_{CC} Data Retention Characteristics

Symbol	Parameter	Test Condition	Min	Typ	Max	Unit
I_{CCDR} (1)	Supply Current (Data Retention)	V_{CC} = 1.5V, $\overline{E} \geq V_{CC}$ –0.2V or $\overline{UB} = \overline{LB} \geq V_{CC}$ –0.2V, f = 0 (3)		5	10	µA
t_{CDR} (1,2)	Chip Deselected to Data Retention Time		0			ns
t_R (2)	Operation Recovery Time		t_{AVAV}			ns
V_{DR} (1)	Supply Voltage (Data Retention)	$\overline{E} \geq V_{CC}$ –0.2V or $\overline{UB} = \overline{LB} \geq V_{CC}$ –0.2V, f = 0	1.5			V

Note: 1. All other Inputs at $V_{IH} \geq V_{CC}$ –0.2V or $V_{IL} \leq$ 0.2V.
2. Tested initially and after any design or process changes that may affect these parameters. t_{AVAV} is Read cycle time.
3. No input may exceed V_{CC} +0.2V.

PACKAGE MECHANICAL

Figure 14. TSOP44 Type II - 44 lead Plastic Thin Small Outline Type II, Package Outline

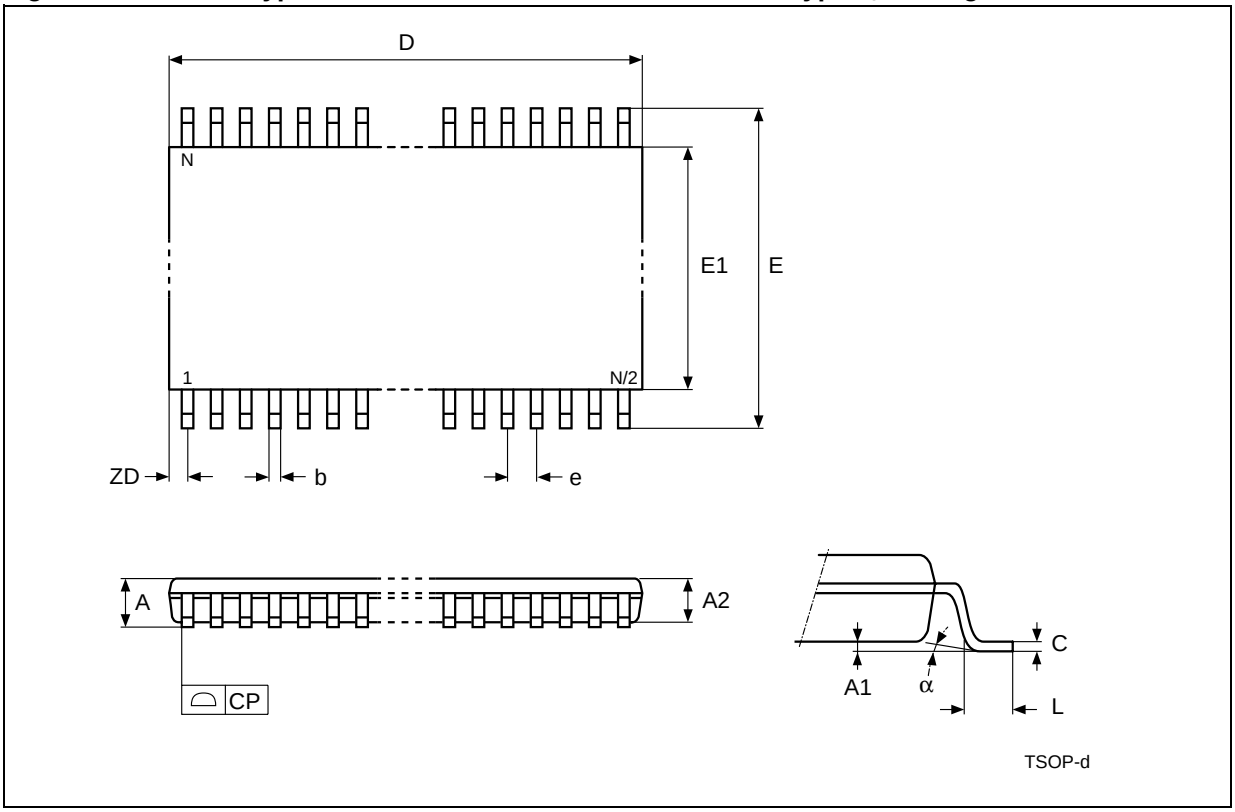

Note: Drawing is not to scale.

Table 10. TSOP 44 TypeII - 44 lead Plastic Thin Small Outline TypeII, Package Mechanical Data

Symbol	millimeters			inches		
	Typ	Min	Max	Typ	Min	Max
A			1.200			0.0472
A1		0.050	0.150		0.0020	0.0059
A2		0.950	1.050		0.0374	0.0413
b	0.350			0.0138		
c		0.120	0.210		0.0047	0.0083
D	18.410	–	–	0.7248	–	–
e	0.800	–	–	0.0315	–	–
E	11.760	–	–	0.4630	–	–
E1	10.160	–	–	0.4000	–	–
L	0.500	0.400	0.600	0.0197	0.0157	0.0236
ZD	0.805	–	–	0.0317	–	–
α		0°	5°		0°	5°
CP			0.100			0.0039
N	44			44		

PART NUMBERING

Table 11. Ordering Information Scheme

Example: M68AW512 M L 55 ND 6 T

Device Type
M68

Mode
A = Asynchronous

Operating Voltage
W = 2.7 to 3.6V

Array Organization
512 = 8 Mbit (512K x16)

Option 1
M = 1 Chip Enable; Write and Standby from $\overline{UB}$ and $\overline{LB}$

Option 2
L = L-Die
N = N-Die

Speed Class
55 = 55 ns
70 = 70 ns

Package
ND = TSOP 44 Type II

Operating Temperature
1 = 0 to 70 °C
6 = –40 to 85 °C

Shipping
T = Tape & Reel Packing

For a list of available options (Speed, Package, etc.) or for further information on any aspect of this device, please contact the STMicroelectronics Sales Office nearest to you.

REVISION HISTORY

Table 12. Document Revision History

Date	Version	Revision Details
January 2002	-01	First Issue
15-Mar-2002	-02	Document status moved to Datasheet Tables 3, 2, 7, 8 and 9 clarified
17-Jun-2002	-03	I_{SB} clarified (Table 6) I_{CCDR}, V_{DR} clarified (Table 9)
03-Oct-2002	3.1	Revision numbering modified: a minor revision will be indicated by incrementing the digit after the dot, and a major revision, by incrementing the digit before the dot (revision version 03 equals 3.0). New part number added.
09-Oct-2002	3.2	Commercial code modified.
27-Sep-2004	4.0	t_{PD} and t_{PU} modified in Table 7., Read and Standby Mode AC Characteristics. Document structure updated without modifications of the content.

Information furnished is believed to be accurate and reliable. However, STMicroelectronics assumes no responsibility for the consequences of use of such information nor for any infringement of patents or other rights of third parties which may result from its use. No license is granted by implication or otherwise under any patent or patent rights of STMicroelectronics. Specifications mentioned in this publication are subject to change without notice. This publication supersedes and replaces all information previously supplied. STMicroelectronics products are not authorized for use as critical components in life support devices or systems without express written approval of STMicroelectronics.

The ST logo is a registered trademark of STMicroelectronics.

All other names are the property of their respective owners

© 2004 STMicroelectronics - All rights reserved

STMicroelectronics group of companies
Australia - Belgium - Brazil - Canada - China - Czech Republic - Finland - France - Germany - Hong Kong - India - Israel - Italy - Japan - Malaysia - Malta - Morocco - Singapore - Spain - Sweden - Switzerland - United Kingdom - United States of America
www.st.com