查询SST89E554RC供应商 捷多邦，专业PCB打样工厂，24小时加急出货

FlashFlex51 MCU

SST89E564RD / SST89V564RD / SST89E554RC / SST89V554RC

Preliminary Specifications

FEATURES:

- **8-bit 8051 Family Compatible Microcontroller (MCU) with Embedded SuperFlash Memory**
- **SST89E564RD/SST89E554RC is 5V Operation**
  - 0 to 40 MHz Operation at 5V
- **SST89V564RD/SST89V554RC is 3V Operation**
  - 0 to 25 MHz Operation at 3V
- **Fully Software and Development Toolset Compatible as well as Pin-For-Pin Package Compatible with Standard 8xC5x Microcontrollers**
- **1 KByte Register/Data RAM**
- **Dual Block SuperFlash EEPROM**
  - SST89E564RD/SST89V564RD: 64 KByte primary block + 8 KByte secondary block (128-Byte sector size)
  - SST89E554RC/SST89V554RC: 32 KByte primary block + 8 KByte secondary block (128-Byte sector size)
  - Individual Block Security Lock
  - Concurrent Operation during In-Application Programming (IAP)
  - Block Address Re-mapping
- **Support External Address Range up to 64 KByte of Program and Data Memory**
- **Three High-Current Drive Pins (16 mA each)**
- **Three 16-bit Timers/Counters**
- **Full-Duplex Enhanced UART**
  - Framing error detection
  - Automatic address recognition
- **Nine Interrupt Sources at 4 Priority Levels**
- **Watchdog Timer (WDT)**
- **Programmable Counter Array (PCA)**
- **Four 8-bit I/O Ports (32 I/O Pins)**
- **Second DPTR register**
- **Reduce EMI Mode (Inhibit ALE through AUXR SFR)**
- **SPI Serial Interface**
- **TTL- and CMOS-Compatible Logic Levels**
- **Brown-out Detection**
- **Extended Power-Saving Modes**
  - Idle Mode
  - Power Down Mode with External Interrupt Wake-up
  - Standby (Stop Clock) Mode
- **PDIP-40, PLCC-44 and TQFP-44 Packages**
- **Temperature Ranges:**
  - Commercial (0°C to +70°C)
  - Industrial (-40°C to +85°C)

PRODUCT DESCRIPTION

SST89E564RD, SST89V564RD, SST89E554RC, and SST89V554RC are members of the FlashFlex51 family of 8-bit microcontrollers. The FlashFlex51 is a family of microcontroller products designed and manufactured on the state-of-the-art SuperFlash CMOS semiconductor process technology. The device uses the same powerful instruction set and is pin-for-pin compatible with standard 8xC5x microcontroller devices.

The device comes with 72/40 KByte of on-chip flash EEPROM program memory using SST's patented and proprietary CMOS SuperFlash EEPROM technology with the SST's field-enhancing, tunneling injector, split-gate memory cells. The SuperFlash memory is partitioned into 2 independent program memory blocks. The primary SuperFlash Block 0 occupies 64/32 KByte of internal program memory space and the secondary SuperFlash Block 1 occupies 8 KByte of internal program memory space. The 8-KByte secondary SuperFlash block can be mapped to the lowest location of the 64/32 KByte address space; it can also be hidden from the program counter and used as an independent EEPROM-like data memory. The flash memory blocks can be programmed via a standard 87C5x OTP EPROM programmer fitted with a special adapter and firmware for SST's device. During the power-on reset, the device can be configured as a slave to an external host for source code storage or as a master to an external host for In-Application Programming (IAP) operation. The device is designed to be programmed "In-System" and "In-Application" on the printed circuit board for maximum flexibility. The device is pre-programmed with an example of bootstrap loader in the memory, demonstrating the initial user program code loading or subsequent user code updating via the "IAP" operation. An example of bootstrap loader is for the user's reference and convenience only. SST does not guarantee the functionality or the usefulness of the sample bootstrap loader. Chip-Erase or Block-Erase operations will erase the pre-programmed sample code.

In addition to 72/40 KByte of SuperFlash EEPROM program memory on-chip, the device can address up to 64 KByte of external program memory. In addition to 1024 x 8 bits of on-chip RAM, up to 64 KByte of external RAM can be addressed.

SST's highly reliable, patented SuperFlash technology and memory cell architecture have a number of important advantages for designing and manufacturing flash EEPROMs. These advantages translate into significant cost and reliability benefits for our customers.

pdf.dzsc.com

TABLE OF CONTENTS

PRODUCT DESCRIPTION 1

LIST OF FIGURES 4

LIST OF TABLES. 5

1.0 FUNCTIONAL BLOCKS 6
Functional Block Diagram 6

2.0 PIN ASSIGNMENTS. 7
2.1 Pin Descriptions 8

3.0 MEMORY ORGANIZATION 10
3.1 Program Memory 10
3.2 Program Memory Block Switching 11
3.2.1 Reset Configuration of Program Memory Block Switching. 12
3.3 Data Memory 12
3.4 Dual Data Pointers 12
3.5 Special Function Registers (SFR) 12

4.0 FLASH MEMORY PROGRAMMING 27
4.1 External Host Programming Mode 27
4.1.1 Product Identification 29
4.1.2 Arming Command 29
4.1.3 Detail Explanation of the External Host Mode Commands 29
4.1.4 External Host Mode Clock Source 30
4.1.5 Flash Operation Status Detection Via External Host Handshake 30
4.1.6 Step-by-step instructions to perform External Host Mode commands 30
4.1.7 Flash Memory Programming Timing Diagrams with External Host Mode 31
4.2 In-Application Programming Mode. 36
4.2.1 In-Application Programming Mode Clock Source. 36
4.2.2 Memory Bank Selection for In-Application Programming Mode. 36
4.2.3 IAP Enable Bit 36
4.2.4 In-Application Programming Mode Commands 36
4.2.5 Polling. 37
4.2.6 Interrupt Termination 37

5.0 TIMERS/COUNTERS 39

6.0 SERIAL I/O 39
6.1 Enhanced Universal Asynchronous Receiver/Transmitter (UART) 39
6.1.1 Framing Error Detection 39
6.1.2 Automatic Address Recognition 39
6.2 Serial Peripheral Interface (SPI) 40

7.0 WATCHDOG TIMER 42

8.0 PROGRAMMABLE COUNTER ARRAY (PCA) 43
8.1 PCA Timer/Counter 43
8.2 PCA Compare/Capture Modules 43
8.2.1 Capture Mode. 43
8.2.2 16-Bit Software Timer Mode. 44
8.2.3 High Speed Output Mode. 44
8.2.4 Pulse Width Modulator 44
8.2.5 Watchdog Timer 44

9.0 SECURITY LOCK 44
9.1 Hard Lock. 44
9.2 SoftLock 44
9.3 Security Lock Status 44

10.0 RESET 47
10.1 Power-On Reset. 47
10.2 Software Reset. 47
10.3 Brown-out Detection Reset 47
10.4 Interrupt Priority and Polling Sequence 47
10.5 Power-Saving Modes 48
10.5.1 Idle Mode 48
10.5.2 Power Down Mode 48
10.5.3 Standby Mode (Stop Clock) 48
10.6 Clock Input Options 50
10.7 Recommended Capacitor Values for Crystal Oscillator 50

11.0 ELECTRICAL SPECIFICATION 51
Absolute Maximum Stress Ratings 51
11.1 Operation Range 51
11.2 Reliability Characteristics 51
11.3 DC Electrical Characteristics 52
11.4 AC Electrical Characteristics 55
11.5 AC Characteristics 56

12.0 PRODUCT ORDERING INFORMATION 60
12.1 Valid Combinations 60

13.0 PACKAGING DIAGRAMS 61

LIST OF FIGURES

FIGURE 2-1: Pin Assignments for 40-pin PDIP 7
FIGURE 2-2: Pin Assignments for 44-lead TQFP 7
FIGURE 2-3: Pin Assignments for 44-lead PLCC 7
FIGURE 3-1: Program Memory Organization for SST89E564RD and SST89V564RD 10
FIGURE 3-2: Program Memory Organization for SST89E554RC and SST89V554RC 11
FIGURE 4-1: I/O Pin Assignments for External Host Mode 28
FIGURE 4-2: Read-ID 31
FIGURE 4-3: Select-Block1 / Select-Block0 31
FIGURE 4-4: Chip-Erase 32
FIGURE 4-5: Block-Erase for SST89E564RD/SST89V564RD 32
FIGURE 4-6: Block-Erase for SST89E554RC/SST89V554RC 33
FIGURE 4-7: Sector-Erase 33
FIGURE 4-8: Byte-Program 34
FIGURE 4-9: Prog-SB1 / Prog-SB2 / Prog-SB3 34
FIGURE 4-10: Prog-SC0 / Prog-SC1 35
FIGURE 4-11: Byte-Verify 35
FIGURE 6-1: SPI Master-slave Interconnection 40
FIGURE 6-2: SPI Transfer Format with CPHA = 0 41
FIGURE 6-3: SPI Transfer Format with CPHA = 1 41
FIGURE 7-1: Block Diagram of Programmable Watchdog Timer 42
FIGURE 9-1: Security Lock Levels 45
FIGURE 10-1: Power-on Reset Circuit 47
FIGURE 10-2: Oscillator Characteristics 50
FIGURE 11-1: I_{DD} Test Condition, Active Mode 54
FIGURE 11-2: I_{DD} Test Condition, Idle Mode 54
FIGURE 11-3: I_{DD} Test Condition, Power-Down Mode 54
FIGURE 11-4: I_{DD} Test Condition, Standby (Stop Clock) Mode 54
FIGURE 11-5: AC Testing Input/Output, Float Waveform 56
FIGURE 11-6: External Program Memory Read Cycle 57
FIGURE 11-7: External Data Memory Read Cycle 57
FIGURE 11-8: External Data Memory Write Cycle 58
FIGURE 11-9: External Clock Drive Waveform 58
FIGURE 11-10: Shift Register Mode Timing Waveforms 59

LIST OF TABLES

TABLE 2-1: Pin Descriptions . . . 8
TABLE 3-1: SFCF Values for Program Memory Block Switching for SST89E564RD/SST89V564RD . . . 11
TABLE 3-2: SFCF Values for Program Memory Block Switching for SST89E554RC/SST89V554RC . . . 12
TABLE 3-3: SFCF Values Under Different Reset Conditions. . . . 12
TABLE 3-4: FlashFlex51 SFR Memory Map . . . 13
TABLE 3-5: CPU related SFRs . . . 14
TABLE 3-6: Flash Memory Programming SFRs . . . 14
TABLE 3-7: Watchdog Timer SFRs . . . 15
TABLE 3-8: Timer/Counters SFRs . . . 15
TABLE 3-9: Interface SFRs . . . 16
TABLE 3-10: PCA SFRs . . . 16
TABLE 3-11: PCA Module Modes . . . 22
TABLE 4-1: External Host Mode Commands for SST89E564RD/SST89V564RD . . . 27
TABLE 4-2: External Host Mode Commands for SST89E554RC/SST89V554RC . . . 28
TABLE 4-3: Signature Bytes . . . 29
TABLE 4-4: IAP Address Resolution for SST89E564RD/SST89V564RD . . . 36
TABLE 4-5: In-Application Programming Mode Commands for SST89E564RD/SST89V564RD . . . 38
TABLE 4-6: In-Application Programming Mode Commands for SST89E554RC/SST89V554RC . . . 38
TABLE 4-7: Flash Memory Programming/Verification Parameters . . . 39
TABLE 8-1: Count Pulse Selected Bits . . . 43
TABLE 8-2: Possible Modes and Associated Values for CCAPMn . . . 43
TABLE 9-1: Security Lock Options. . . . 45
TABLE 9-2: Security Lock Access Table . . . 46
TABLE 10-1: Interrupt Polling Sequence . . . 48
TABLE 10-2: Power Saving Modes . . . 49
TABLE 11-1: Operating Range . . . 51
TABLE 11-2: Reliability Characteristics . . . 51
TABLE 11-3: DC Electrical Characteristics: 40MHz devices; 4.5-5.5V . . . 52
TABLE 11-4: DC Electrical Characteristics: 25MHz devices; 2.7-3.6V . . . 53
TABLE 11-5: AC Electrical Characteristics . . . 55
TABLE 11-6: External Clock Drive . . . 58
TABLE 11-7: Serial Port Timing . . . 59

1.0 FUNCTIONAL BLOCKS

FUNCTIONAL BLOCK DIAGRAM

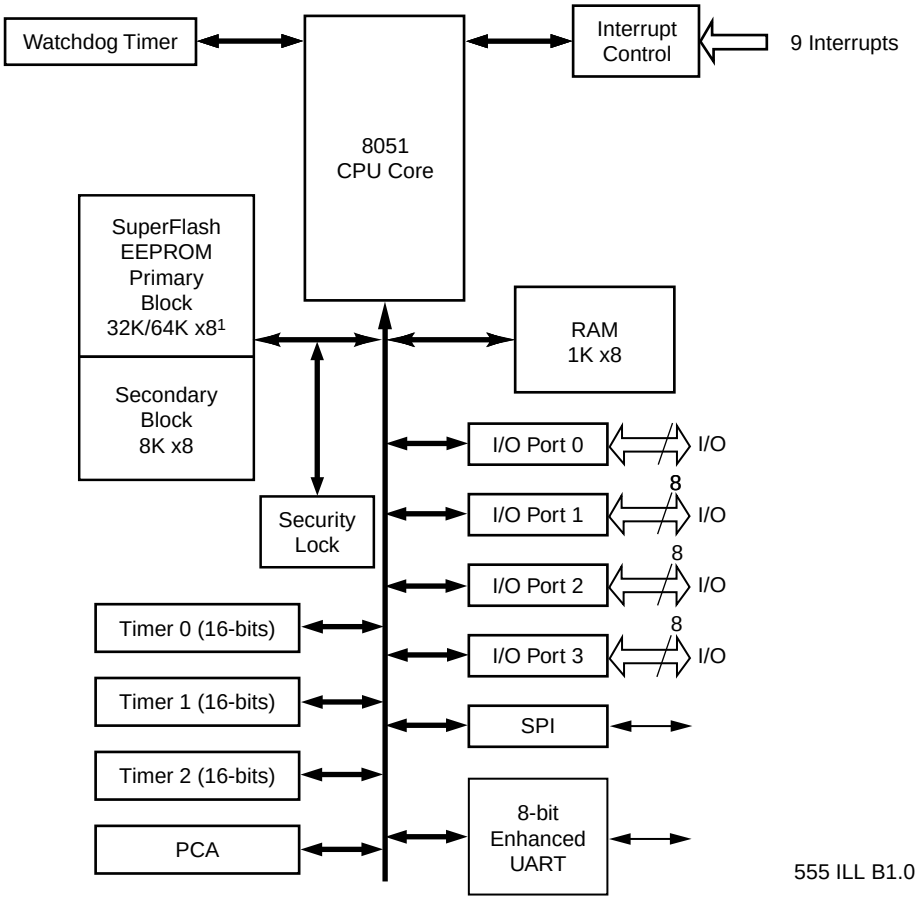

1. 64K x8 for SST89E564RD and SST89V564RD
   32K x8 for SST89E554RC and SST89V554RC

2.0 PIN ASSIGNMENTS

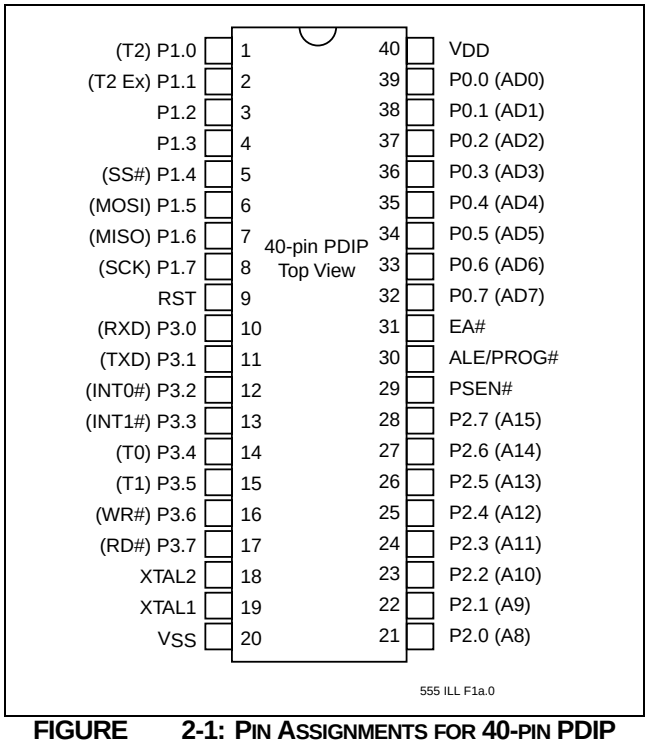

FIGURE 2-1: PIN ASSIGNMENTS FOR 40-PIN PDIP

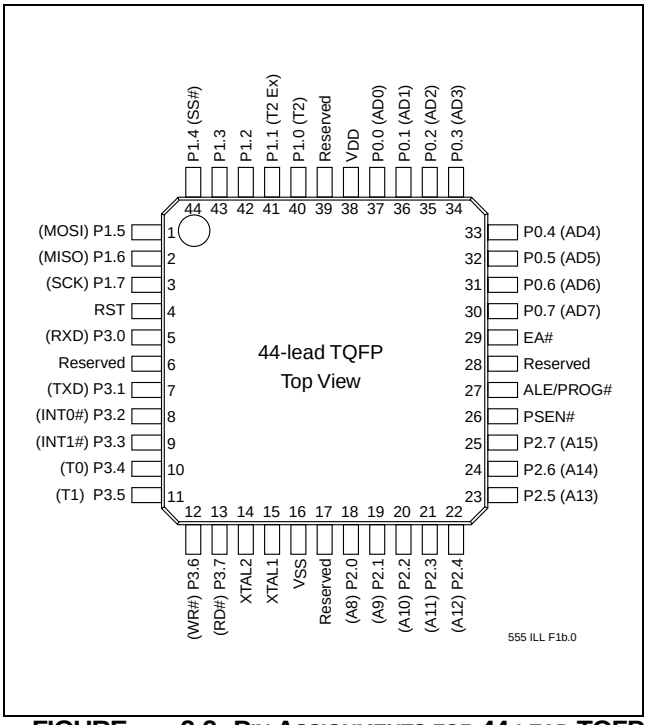

FIGURE 2-2: PIN ASSIGNMENTS FOR 44-LEAD TQFP

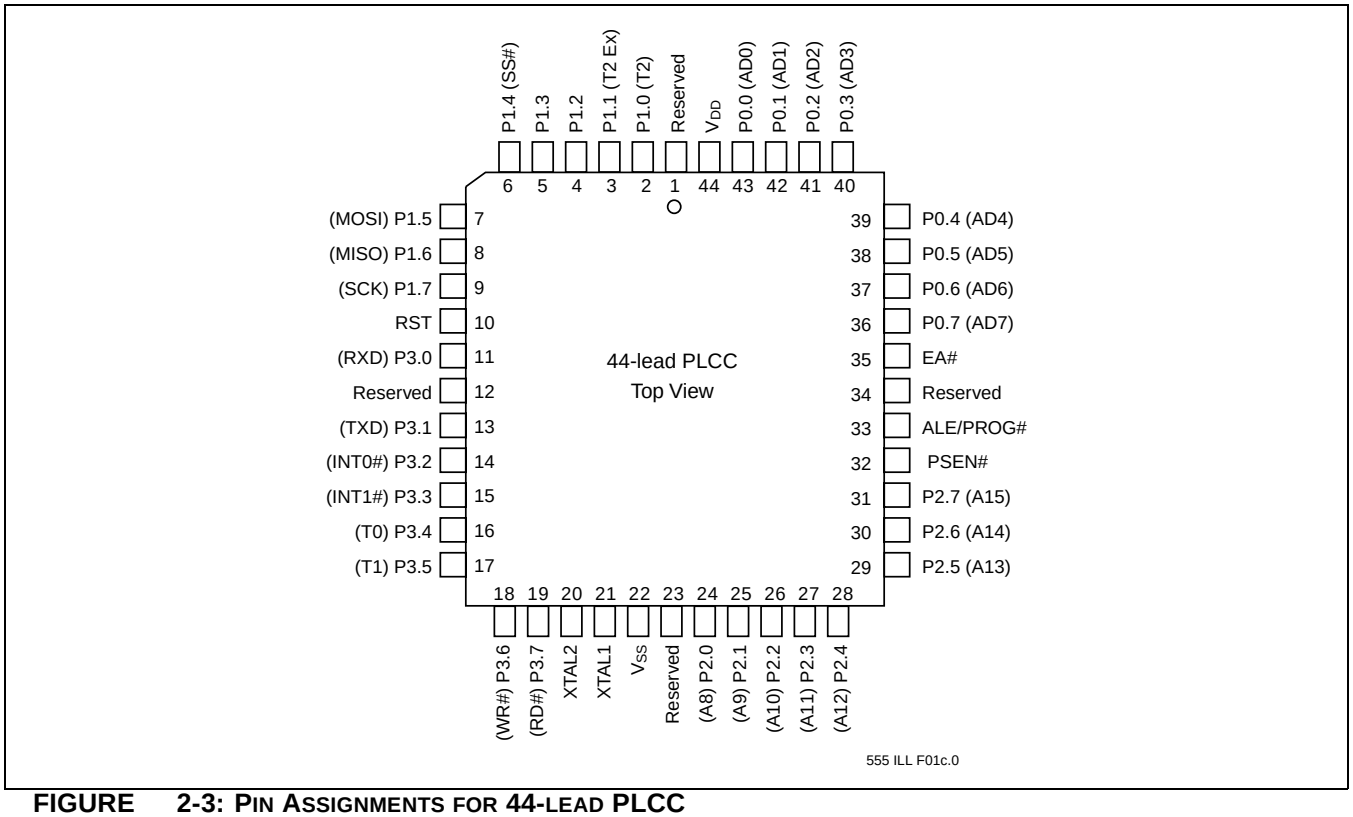

FIGURE 2-3: PIN ASSIGNMENTS FOR 44-LEAD PLCC

2.1 Pin Descriptions

TABLE 2-1: PIN DESCRIPTIONS (1 OF 2)

Symbol	Type[1]	Name and Functions
P0[7:0]	I/O	**Port 0:** Port 0 is an 8-bit open drain bi-directional I/O port. As an output port each pin can sink several LS TTL inputs. Port 0 pins float that have “1”s written to them, and in this state can be used as high-impedance inputs. Port 0 is also the multiplexed low-order address and data bus during accesses to external memory. In this application, it uses strong internal pull-ups when transitioning to V_{OH}. Port 0 also receives the code bytes during the external host mode programming, and outputs the code bytes during the external host mode verification. External pull-ups are required during program verification.
P1[7:0]	I/O with internal pull-ups	**Port 1:** Port 1 is an 8-bit bi-directional I/O port with internal pull-ups. The Port 1 output buffers can drive LS TTL inputs. Port 1 pins are pulled high by the internal pull-ups when “1”s are written to them and can be used as inputs in this state. As inputs, Port 1 pins that are externally pulled low will source current (I_{IL}, see Tables 11-3 and 11-4) because of the internal pull-ups. P1[5, 6, 7] have high current drive of 16 mA. Port 1 also receives the low-order address bytes during the external host mode programming and verification.
P1[0]	I/O	**T2:** External count input to Timer/Counter 2 or Clock-out from Timer/Counter 2
P1[1]	I	**T2EX:** Timer/Counter 2 capture/reload trigger and direction control
P1[2]	I	**ECI:** PCA Timer/Counter External Input: This signal is the external clock input for the PCS timer/counter.
P1[3]	I/O	**CEX0:** Compare/Capture Module External I/O Each compare/capture module connects to a Port 1 pin for external I/O. When not used by the PCA, this pin can handle standard I/O.
P1[4]	I/O	**SS#:** Master Input or Slave Output for SPI. **OR** **CEX1:** Compare/Capture Module External I/O
P1[5]	I/O	**MOSI:** Master Output line, Slave Input line for SPI **OR** **CEX2:** Compare/Capture Module External I/O
P1[6]	I/O	**MISO:** Master Input line, Slave Output line for SPI **OR** **CEX3:** Compare/Capture Module External I/O
P1[7]	I/O	**SCK:** Master clock output, slave clock input line for SPI **OR** **CEX4:** Compare/Capture Module External I/O
P2[7:0]	I/O with internal pull-ups	**Port 2:** Port 2 is an 8-bit bi-directional I/O port with internal pull-ups. Port 2 pins are pulled high by the internal pull-ups when “1”s are written to them and can be used as inputs in this state. As inputs, Port 2 pins that are externally pulled low will source current (I_{IL}, see Tables 11-3 and 11-4) because of the internal pull-ups. Port 2 sends the high-order address byte during fetches from external Program memory and during accesses to external Data Memory that use 16-bit address (MOVX@DPTR). In this application, it uses strong internal pull-ups when transitioning to V_{OH}. Port 2 also receives some control signals and a partial of high-order address bits during the external host mode programming and verification.
P3[7:0]	I/O with internal pull-ups	**Port 3:** Port 3 is an 8-bit bidirectional I/O port with internal pull-ups. The Port 3 output buffers can drive LS TTL inputs. Port 3 pins are pulled high by the internal pull-ups when “1”s are written to them and can be used as inputs in this state. As inputs, Port 3 pins that are externally pulled low will source current (I_{IL}, see Tables 11-3 and 11-4) because of the internal pull-ups. Port 3 also receives some control signals and a partial of high-order address bits during the external host mode programming and verification.
P3[0]	I	**RXD:** Serial input line
P3[1]	O	**TXD:** Serial output line
P3[2]	I	**INT0#:** External Interrupt 0 Input

TABLE 2-1: PIN DESCRIPTIONS (CONTINUED) (2 OF 2)

Symbol	Type[1]	Name and Functions
P3[3]	I	**INT1#:** External Interrupt 1 Input
P3[4]	I	**T0:** External count input to Timer/Counter 0
P3[5]	I	**T1:** External count input to Timer/Counter 1
P3[6]	O	**WR#:** External Data Memory Write strobe
P3[7]	O	**RD#:** External Data Memory Read strobe
PSEN#	I/O	**Program Store Enable:** PSEN# is the Read strobe to External Program Store. When the device is executing from Internal Program Memory, PSEN# is inactive (V_{OH}). When the device is executing code from External Program Memory, PSEN# is activated twice each machine cycle, except when access to External Data Memory while one PSEN# activation is skipped in each machine cycle. A forced high-to-low input transition on the PSEN# pin while the RST input is continually held high for more than ten machine cycles will cause the device to enter External Host mode for programming.
RST	I	**Reset:** While the oscillator is running, a high logic state on this pin for two machine cycles will reset the device. After a reset, if the PSEN# pin is driven by a high-to-low input transition while the RST input pin is held high, the device will enter the External Host mode, otherwise the device will enter the Normal operation mode.
EA#	I	**External Access Enable:** EA# must be driven to V_{IL} in order to enable the device to fetch code from the External Program Memory. EA# must be driven to V_{IH} for internal program execution. However, Security lock level 4 will disable EA#, and program execution is only possible from internal program memory. The EA# pin can tolerate a high voltage[2] of 12V (see “Absolute Maximum Stress Ratings” on page 51).
ALE/PROG#	I/O	**Address Latch Enable:** ALE is the output signal for latching the low byte of the address during accesses to external memory. This pin is also the programming pulse input (PROG#) for the external host mode. ALE is activated twice each machine cycle, except when access to External Data Memory, one ALE activation is skipped in the second machine cycle. However, if AO is set to 1, ALE is disabled. (see “Auxiliary Register (AUXR)” on page 20)
XTAL1 XTAL2	I O	**Oscillator:** Input and output to the inverting oscillator amplifier. XTAL1 is input to internal clock generation circuits from an external clock source.
V_{DD}	I	**Power Supply:** Supply voltage during normal, Idle, Power Down, and Standby Mode operations.
V_{SS}	I	**Ground:** Circuit ground. (0V reference)

T2-1.0 555

1. I = Input; O = Output
2. It is not necessary to receive a 12V programming supply voltage during flash programming.

3.0 MEMORY ORGANIZATION

The device has separate address spaces for program and data memory.

3.1 Program Memory

There are two internal flash memory blocks in the device. The primary flash memory block (Block 0) has 64/32 KByte. The secondary flash memory block (Block 1) has 8 KByte. Since the total program address space is limited to 64/32 KByte, the SFCF[1:0] bit are used to control Program Bank Selection. Please refer to Figure 3-1 and Figure 3-2 for the program memory configurations. Program Bank Select is described in the next section.

The 64K/32K x8 primary SuperFlash block is organized as 512/256 sectors, each sector consists of 128 Bytes.

The 8K x8 secondary SuperFlash block is organized as 64 sectors, each sector consists also of 128 Bytes.

For both blocks, the 7 least significant program address bits select the byte within the sector. The remainder of the program address bits select the sector within the block.

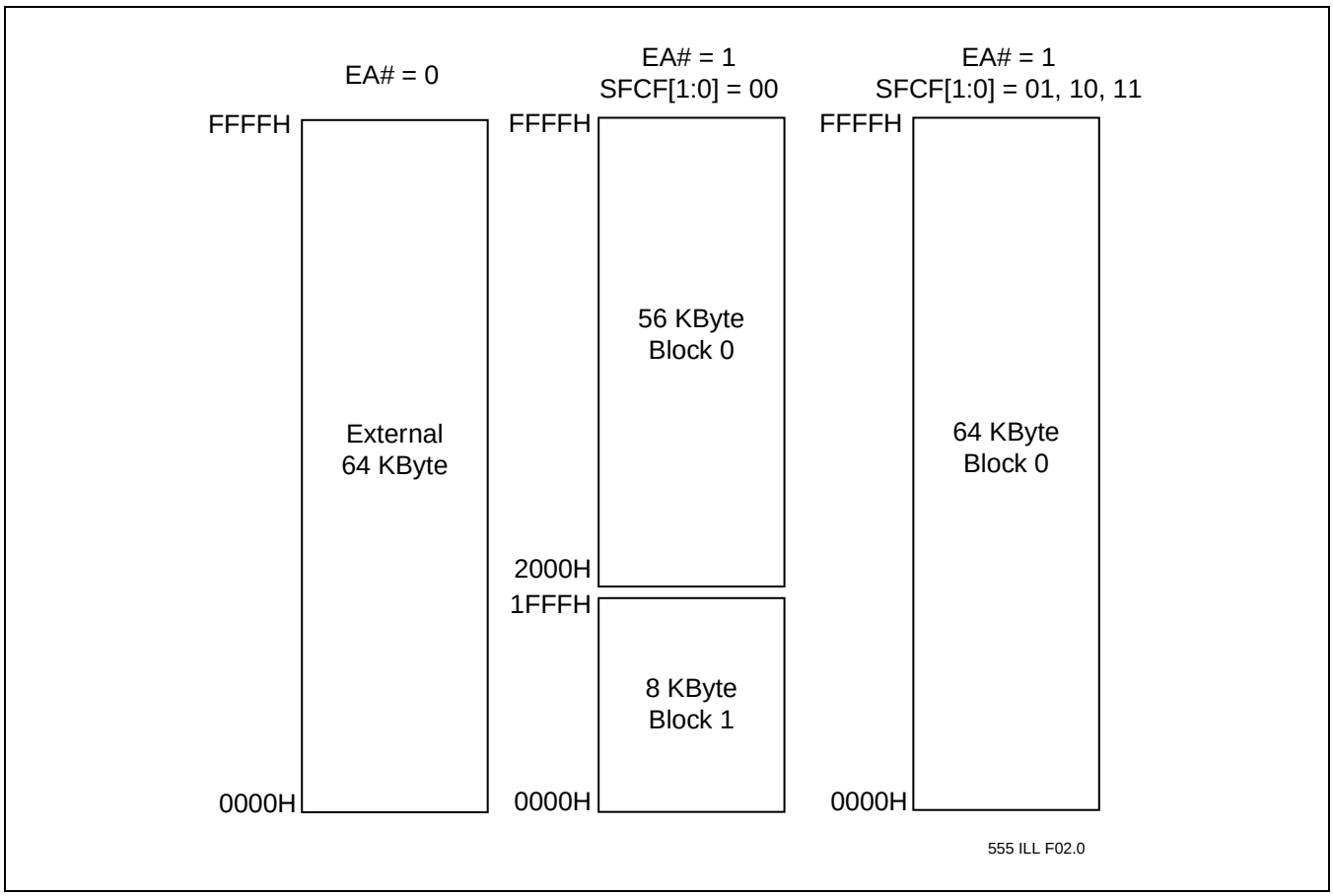

FIGURE 3-1: PROGRAM MEMORY ORGANIZATION FOR SST89E564RD AND SST89V564RD

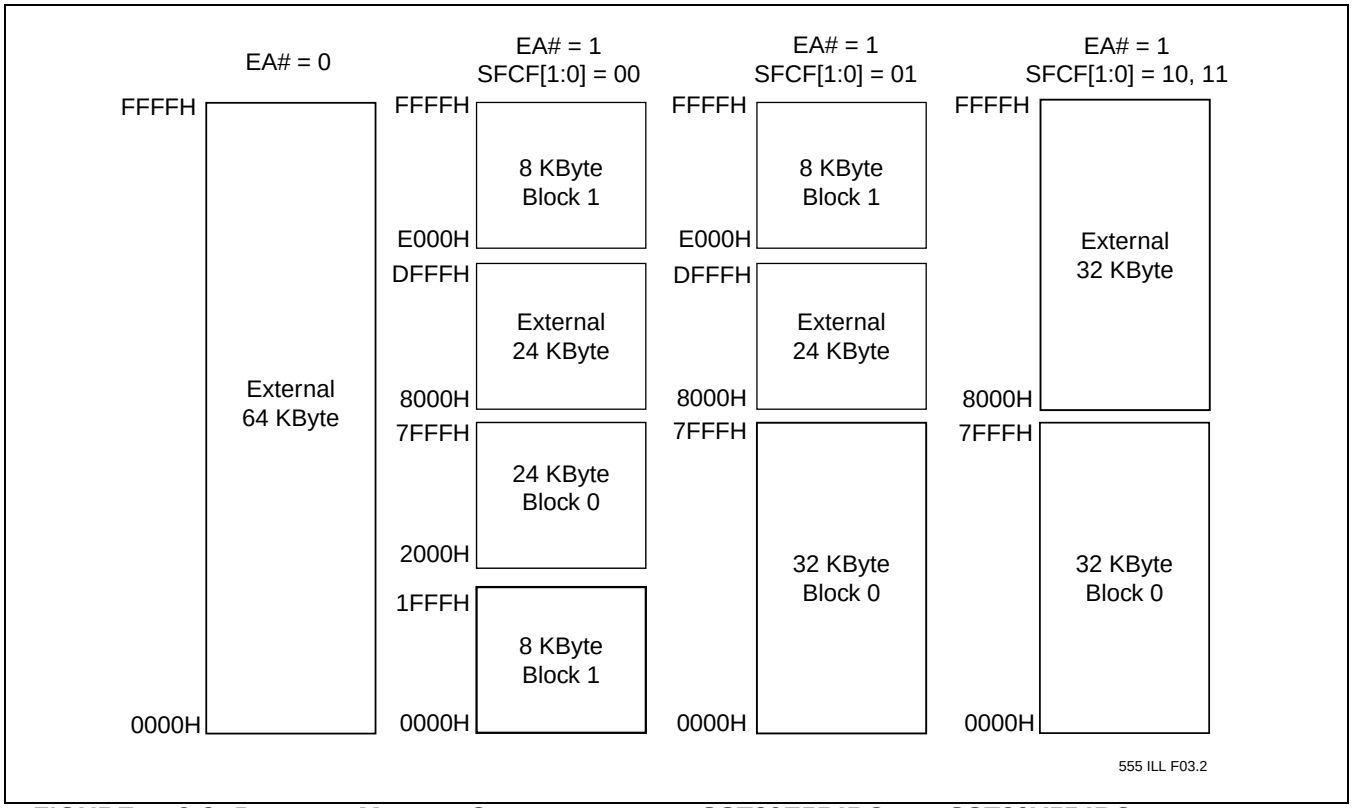

FIGURE 3-2: PROGRAM MEMORY ORGANIZATION FOR SST89E554RC AND SST89V554RC

3.2 Program Memory Block Switching

The program memory block switching feature of the device allows either Block 1 or the lowest 8 KByte of Block 0 to be used for the lowest 8 KByte of the program address space. SFCF[1:0] controls program memory block switching.

TABLE 3-1: SFCF VALUES FOR PROGRAM MEMORY BLOCK SWITCHING FOR SST89E564RD/SST89V564RD

SFCF[1:0]	Program Memory Block Switching
01, 10, 11	Block 1 is not visible to the PC; Block 1 is reachable only via In-Application Programming from 000H - 1FFFH.
00	Block 1 is overlaid onto the low 8K of the program address space; occupying address locations 0000H - 1FFFH. When the PC falls within 0000H - 1FFFH, the instruction will be fetched from Block 1 instead of Block 0. Outside of 0000H - 1FFFH, Block 0 is used. Locations 0000H - 1FFFH of Block 0 are reachable through In-Application Programming.

T3-1.0 555

TABLE 3-2: SFCF VALUES FOR PROGRAM MEMORY BLOCK SWITCHING FOR SST89E554RC/SST89V554RC

SFCF[1:0]	Program Memory Block Switching
10, 11	Block 1 is not visible to the PC; Block 1 is reachable only via In-Application Programming from E000H - FFFFH.
01	Both Block 0 and Block 1 are visible to the PC. Block 0 is occupied from 0000H - 7FFFH. Block 1 is occupied from E000H - FFFFH.
00	Block 1 is overlaid onto the low 8K of the program address space; occupying address locations 0000H - 1FFFH. When the PC falls within 0000H - 1FFFH, the instruction will be fetched from Block 1 instead of Block 0. Outside of 0000H - 1FFFH, Block 0 is used. Locations 0000H - 1FFFH of Block 0 are reachable through In-Application Programming.

T3-2.0 555

3.2.1 Reset Configuration of Program Memory Block Switching

Program memory block switching is initialized after reset according to the state of the Start-up Configuration bit SC0. The SC0 bit is programmed via an External Host Mode command or an IAP Mode command. See Table 4-2 and Table 4-6.

Once out of reset, the SFCF[0] bit can be changed dynamically by the program for desired effects. Changing SFCF[0] will not change the SC0 bit.

Caution must be taken when dynamically changing the SFCF[0] bit. Since this will cause different physical memory to be mapped to the logical program address space. The user must avoid executing block switching instructions within the address range 0000H to 1FFFH.

TABLE 3-3: SFCF VALUES UNDER DIFFERENT RESET CONDITIONS

		State of SFCF[1:0] after:		
SC1[1]	SC0	Power-on or External Reset	WDT Reset or Brown-out Reset	Software Reset
1	1	00 (default)	x0	10
1	0	01	x1	11
0	1	10	10	10
0	0	11	11	11

T3-3.0 555

1. SC1 only applies to SST89E554RC and SST89V554RC.

3.3 Data Memory

The device has 1024 x8 bits of on-chip RAM and can address up to 64 KByte of external data memory.

The device has four sections of internal data memory:

1. The lower 128 Bytes of RAM (00H to 7FH) are directly and indirectly addressable.
2. The higher 128 Bytes of RAM (80H to FFH) are indirectly addressable.
3. The Special Function Registers (SFRs, 80H to FFH) are directly addressable only.
4. The expanded RAM of 768 Bytes (00H to 2FFH) is indirectly addressable by the move external instruction (MOVX) and clearing the EXTRAM bit. (See “Auxiliary Register (AUXR)” on page 20)

3.4 Dual Data Pointers

The device has two 16-bit data pointers. The DPTR Select (DPS) bit in AUXR1 determines which of the two data pointers is accessed. When DPS=0, DPTR0 is selected; when DPS=1, DPTR1 is selected. Quickly switching between the two data pointers can be accomplished by a single INC instruction on AUXR1.

3.5 Special Function Registers (SFR)

Most of the unique features of the FlashFlex51 microcontroller family are controlled by bits in special function registers (SFRs) located in the SFR Memory Map shown in Table 3-4. Individual descriptions of each SFR are provided and Reset values indicated in Tables 3-5 to 3-9.

TABLE 3-4: FLASHFLEX51 SFR MEMORY MAP

	8 BYTES								
F8H	IPA[1]	CH	CCAP0H	CCAP1H	CCAP2H	CCAP3H	CCAP4H		FFH
F0H	B[1]							IPAH	F7H
E8H	IEA[1]	CL	CCAP0L	CCAP1L	CCAP2L	CCAP3L	CCAP4L		EFH
E0H	ACC[1]								E7H
D8H	CCON[1]	CMOD	CCAPM0	CCAPM1	CCAPM2	CCAPM3	CCAPM4		DFH
D0H	PSW[1]					SPCR			D7H
C8H	T2CON[1]	T2MOD	RCAP2L	RCAP2H	TL2	TH2			CFH
C0H	WDTC[1]								C7H
B8H	IP[1]	SADEN							BFH
B0H	P3[1]	SFCF	SFCM	SFAL	SFAH	SFDT	SFST	IPH	B7H
A8H	IE[1]	SADDR	SPSR						AFH
A0H	P2[1]		AUXR1						A7H
98H	SCON[1]	SBUF							9FH
90H	P1[1]								97H
88H	TCON[1]	TMOD	TL0	TL1	TH0	TH1	AUXR		8FH
80H	P0[1]	SP	DPL	DPH		WDTD	SPDR	PCON	87H

T3-4.1 555

1. SFRs are bit addressable.

TABLE 3-5: CPU RELATED SFRS

Symbol	Description	Direct Address	Bit Address, Symbol, or Alternative Port Function MSB							LSB	RESET Value
ACC[1]	Accumulator	E0H	ACC[7:0]								00H
B[1]	B Register	F0H	B[7:0]								00H
PSW[1]	Program Status Word	D0H	CY	AC	F0	RS1	RS0	OV	F1	P	00H
SP	Stack Pointer	81H	SP[7:0]								07H
DPL	Data Pointer Low	82H	DPL[7:0]								00H
DPH	Data Pointer High	83H	DPH[7:0]								00H
IE[1]	Interrupt Enable	A8H	EA	EC	ET2	ES0	ET1	EX1	ET0	EX0	40H
IEA[1]	Interrupt Enable A	E8H	-	-	-	-	EBO	-	-	-	xxxx0xxxb
IP[1]	Interrupt Priority Reg	B8H	-	PPC	PT2	PS	PT1	PX1	PT0	PX0	x0000000b
IPH	Interrupt Priority Reg High	B7H	-	PPCH	PT2H	PSH	PT1H	PX1H	PT0H	PX0H	x0000000b
IPA[1]	Interrupt Priority Reg A	F8H	-	-	-	-	PBO	-	-	-	xxxx0xxxb
IPAH	Interrupt Priority Reg A High	F7H	-	-	-	-	PBOH	-	-	-	xxxx0xxxb
PCON	Power Control	87H	SMOD1	SMOD0	BOF	POF	GF1	GF0	PD	IDL	00010000b
AUXR	Auxiliary Reg	8EH	-	-	-	-	-	-	EXTRAM	AO	xxxxxxx00b
AUXR1	Auxiliary Reg 1	A2H	-	-	-	-	GF2	0	-	DPS	xxxx00x0b

T3-5.1 555

1. Bit Addressable SFRs

TABLE 3-6: FLASH MEMORY PROGRAMMING SFRS

Symbol	Description	Direct Address	Bit Address, Symbol, or Alternative Port Function MSB							LSB	RESET Value
SFST	SuperFlash Status	B6H	SECD1	SECD2	SECD3	-	-	FLASH_BUSY	-	-	xxxxx0xxb
SFCF	SuperFlash Configuration	B1H	-	IAPEN	-	-	-	-	SWR	BSEL	x0xxxxxxb
SFCM	SuperFlash Command	B2H	FIE	FCM							00H
SFDT	SuperFlash Data	B5H	SuperFlash Data Register								00H
SFAL	SuperFlash Address Low	B3H	SuperFlash Low Order Byte Address Register - A_7 to A_0 (SFAL)								00H
SFAH	SuperFlash Address High	B4H	SuperFlash High Order Byte Address Register - A_{15} to A_8 (SFAH)								00H

T3-6.0 555

TABLE 3-7: WATCHDOG TIMER SFRS

Symbol	Description	Direct Address	Bit Address, Symbol, or Alternative Port Function MSB							LSB	RESET Value
WDTC[1]	Watchdog Timer Control	C0H	-	-	-	WDOUT	WDRE	WDTS	WDT	SWDT	xxx00x00b
WDTD	Watchdog Timer Data/Reload	85H	Watchdog Timer Data/Reload								00H

T3-7.0 555

1. Bit Addressable SFRs

TABLE 3-8: TIMER/COUNTERS SFRS

Symbol	Description	Direct Address	Bit Address, Symbol, or Alternative Port Function MSB							LSB	RESET Value
TMOD	Timer/Counter Mode Control	89H	Timer 1				Timer 0				00H
			GATE	C/T#	M1	M0	GATE	C/T#	M1	M0	
TCON[1]	Timer/Counter Control	88H	TF1	TR1	TF0	TR0	IE1	IT1	IE0	IT0	00H
TH0	Timer 0 MSB	8CH	TH0[7:0]								00H
TL0	Timer 0 LSB	8AH	TL0[7:0]								00H
TH1	Timer 1 MSB	8DH	TH1[7:0]								00H
TL1	Timer 1 LSB	8BH	TL1[7:0]								00H
T2CON[1]	Timer / Counter 2 Control	C8H	TF2	EXF2	RCLK	TCLK	EXEN2	TR2	C/T2#	CP/RL2#	00H
T2MOD#	Timer2 Mode Control	C9H	-	-	-	-	-	-	T2OE	DCEN	xxxxxx00b
TH2	Timer 2 MSB	CDH	TH2[7:0]								00H
TL2	Timer 2 LSB	CCH	TL2[7:0]								00H
RCAP2H	Timer 2 Capture MSB	CBH	RCAP2H[7:0]								00H
RCAP2L	Timer 2 Capture LSB	CAH	RCAP2L[7:0]								00H

T3-8.0 555

1. Bit Addressable SFRs

TABLE 3-9: INTERFACE SFRS

Symbol	Description	Direct Address	Bit Address, Symbol, or Alternative Port Function MSB							LSB	RESET Value
SBUF	Serial Data Buffer	99H	SBUF[7:0]								Indeterminate
SCON[1]	Serial Port Control	98H	SM0/FE	SM1	SM2	REN	TB8	RB8	TI	RI	00H
SADDR	Slave Address	A9H	SADDR#[7:0]								00H
SADEN	Slave Address Mask	B9H	SADEN#[7:0]								00H
SPCR	SPI Control Register	D5H	SPIE	SPE	DORD	MSTR	CPOL	CPHA	SPR1	SPR0	04H
SPSR	SPI Status Register	AAH	SPIF	WCOL							00H
SPDR	SPI Data Register	86H	SPD7	SPD6	SPD5	SPD4	SPD3	SPD2	SPD1	SPD0	00H
P0[1]	Port 0	80H	P0[7:0]								FFH
P1[1]	Port 1	90H	-	-	-	-	-	-	T2EX	T2	FFH
P2[1]	Port 2	A0H	P2[7:0]								FFH
P3[1]	Port 3	B0H	RD#	WR#	T1	T0	INT1#	INT0#	TXD	RXD	FFH

T3-9.0 555

1. Bit Addressable SFRs

TABLE 3-10: PCA SFRS

Symbol	Description	Direct Address	Bit Address, Symbol, or Alternative Port Function MSB							LSB	RESET Value
CH CL	PCA Timer/Counter	F9H E9H	CH[7:0] CL[7:0]								00H 00H
CCON[1]	PCA Timer/Counter Control Register	D8H	CF	CR	-	CCF4	CCF3	CCF2	CCF1	CCF0	00x00000b
CMOD	PCA Timer/Counter Mode Register	D9H	CIDL	WDTE	-	-	-	CPS1	CPS0	ECF	00xxx000b
CCAP0H	PCA Module 0 Compare/Capture Registers	FAH	CCAP0H[7:0]								00H
CCAP0L		EAH	CCAP0L[7:0]								00H
CCAP1H	PCA Module 1 Compare/Capture Registers	FBH	CCAP1H[7:0]								00H
CCAP1L		EBH	CCAP1L[7:0]								00H
CCAP2H	PCA Module 2 Compare/Capture Registers	FCH	CCAP2H[7:0]								00H
CCAP2L		ECH	CCAP2L[7:0]								00H
CCAP3H	PCA Module 3 Compare/Capture Registers	FDH	CCAP3H[7:0]								00H
CCAP3L		EDH	CCAP3L[7:0]								00H
CCAP4H	PCA Module 4 Compare/Capture Registers	FEH	CCAP4H[7:0]								00H
CCAP4L		EEH	CCAP4L[7:0]								00H
CCAPM0	PCA Compare/Capture Module Mode Registers	DAH	-	ECOM0	CAPP0	CAPN0	MAT0	TOG0	PWM0	ECCF0	x000 0000b
CCAPM1		DBH	-	ECOM1	CAPP1	CAPN1	MAT1	TOG1	PWM1	ECCF1	x000 0000b
CCAPM2		DCH	-	ECOM2	CAPP2	CAPN2	MAT2	TOG2	PWM2	ECCF2	x000 0000b
CCAPM3		DDH	-	ECOM3	CAPP3	CAPN3	MAT3	TOG3	PWM3	ECCF3	x000 0000b
CCAPM4		DEH	-	ECOM4	CAPP4	CAPN4	MAT4	TOG4	PWM4	ECCF4	x000 0000b

T3-10.1 555

1. Bit Addressable SFRs

SuperFlash Status Register (SFST) (Read Only Register)

Location	7	6	5	4	3	2	1	0	Reset Value
0B6H	SECD1	SECD2	SECD3	-	-	FLASH_BUSY	-	-	xxxxx0xxb

Symbol	Function
SECD1	Security bit 1.
SECD2	Security bit 2.
SECD3	Security bit 3. Please refer to Table 4-6 for security lock options.
FLASH_BUSY	Flash operation completion polling bit. 1: Device is busy with flash operation. 0: Device has fully completed the last command.

SuperFlash Configuration Register (SFCF)

Location	7	6	5	4	3	2	1	0	Reset Value
0B1H	-	IAPEN	-	-	-	-	SWR	BSEL	x0xxxxxxb

Symbol	Function
IAPEN	Enable IAP operation 0: IAP commands are disabled 1: IAP commands are enabled
SWR	Software Reset See “10.2 Software Reset” on page 47
BSEL	Program memory block switching bit See Figures 3-1 and 3-2.

SuperFlash Command Register (SFCM)

Location	7	6	5	4	3	2	1	0	Reset Value
0B2H	FIE	FCM6	FCM5	FCM4	FCM3	FCM2	FCM1	FCM0	00000000b

Symbol	Function
FIE	Flash Interrupt Enable. 0: INT1# is not reassigned. 1: INT1# is re-assigned to signal IAP operation completion. External INT1# interrupts are ignored.
FCM[6:0]	Flash operation command 000_1011b Sector-Erase 000_1101b Block-Erase 000_1100b Byte-Verify[1] 000_1110b Byte-Program 000_1111b Prog-SB1 000_0011b Prog-SB2 000_0101b Prog-SB3 000_1001b Prog-SC0 All other combinations are not implemented, and reserved for future use.

1. Byte-Verify has a single machine cycle latency and will not generate any INT1# interrupt regardless of FIE.

SuperFlash Data Register (SFDT)

Location	7	6	5	4	3	2	1	0	Reset Value
0B5H	SuperFlash Data Register								00000000b

Symbol	Function
SFDT	Mailbox register for interfacing with flash memory block. (Data register).

SuperFlash Address Registers (SFAL)

Location	7	6	5	4	3	2	1	0	Reset Value
0B3H	SuperFlash Low Order Byte Address Register								00000000b

Symbol	Function
SFAL	Mailbox register for interfacing with flash memory block. (Low order address register).

SuperFlash Address Registers (SFAH)

Location	7	6	5	4	3	2	1	0	Reset Value
0B4H	SuperFlash High Order Byte Address Register								00000000b

Symbol	Function
SFAH	Mailbox register for interfacing with flash memory block. (High order address register).

Interrupt Enable (IE)

Location	7	6	5	4	3	2	1	0	Reset Value
A8H	EA	EC	ET2	ES	ET1	EX1	ET0	EX0	00H

Symbol	Function
EA	Global Interrupt Enable. 0 = Disable 1 = Enable
EC	PCA Interrupt Enable.
ET2	Timer 2 Interrupt Enable.
ES	Serial Interrupt Enable.
ET1	Timer 1 Interrupt Enable.
EX1	External 1 Interrupt Enable.
ET0	Timer 0 Interrupt Enable.
EX0	External 0 Interrupt Enable.

Interrupt Enable A (IEA)

Location	7	6	5	4	3	2	1	0	Reset Value
E8H	-	-	-	-	EBO	-	-	-	xxxx0xxxb

Symbol	Function
EBO	Brown-out Interrupt Enable. 1 = Enable the interrupt 0 = Disable the interrupt

Interrupt Priority (IP)

Location	7	6	5	4	3	2	1	0	Reset Value
B8H	-	PPC	PT2	PS	PT1	PX1	PT0	PX0	x0000000b

Symbol	Function
PPC	PCA interrupt priority bit.
PT2	Timer 2 interrupt priority bit.
PS	Serial Port interrupt priority bit.
PT1	Timer 1 interrupt priority bit.
PX1	External interrupt 1 priority bit.
PT0	Timer 0 interrupt priority bit.
PX0	External interrupt 0 priority bit.

Interrupt Priority High (IPH)

Location	7	6	5	4	3	2	1	0	Reset Value
B7H	-	PPCH	PT2H	PSH	PT1H	PX1H	PT0H	PX0H	x0000000b

Symbol	Function
PPCH	PCA interrupt priority bit high.
PT2H	Timer 2 interrupt priority bit high.
PSH	Serial Port interrupt priority bit high.
PT1H	Timer 1 interrupt priority bit high.
PX1H	External interrupt 1 priority bit high.
PT0H	Timer 0 interrupt priority bit high.
PX0H	External interrupt 0 priority bit high.

Interrupt Priority A (IPA)

Location	7	6	5	4	3	2	1	0	Reset Value
F8H	-	-	-	-	PBO	-	-	-	xxxx0xxxb

Symbol	Function
PBO	Brown-out interrupt priority bit.

Interrupt Priority A High (IPAH)

Location	7	6	5	4	3	2	1	0	Reset Value
F7H	-	-	-	-	PBOH	-	-	-	xxxx0xxxb

Symbol	Function
PBOH	Brown-out Interrupt priority bit high.

Auxiliary Register (AUXR)

Location	7	6	5	4	3	2	1	0	Reset Value
8EH	-	-	-	-	-	-	EXTRAM	AO	xxxxxx00b

Symbol	Function
EXTRAM	0: Internal Expanded RAM access. For details, refer to “Data Memory” on page 12. 1: External data memory access.
AO	0: Normal ALE 1: ALE is normally off. ALE is active only during a MOVX or MOVC instruction. This will reduce EMI.

Auxiliary Register 1 (AUXR1)

Location	7	6	5	4	3	2	1	0	Reset Value
A2H	-	-	-	-	GF2	0	-	DPS	xxxx00x0b

Symbol	Function
GF2	General purpose user-defined flag.
DPS	DPTR registers select bit. 0: DPTR0 is selected. 1: DPTR1 is selected.

Watchdog Timer Control Register (WDTC)

Location	7	6	5	4	3	2	1	0	Reset Value
0C0H	-	-	-	WDOUT	WDRE	WDTS	WDT	SWDT	xxx00x00b

Symbol	Function
WDOUT	Watchdog output enable. 0: Watchdog reset will not be exported on Reset pin. 1: Watchdog reset if enabled by WDRE, will assert Reset pin for 32 clocks.
WDRE	Watchdog timer reset enable. 0: Disable watchdog timer reset. 1: Enable watchdog timer reset.
WDTS	Watchdog timer reset flag. 0: External hardware reset clears the flag. Flag can also be cleared by writing a 1. Flag survives if chip reset happened because of watchdog timer overflow. 1: Hardware sets the flag on watchdog overflow.
WDT	Watchdog timer refresh. 0: Hardware resets the bit when refresh is done. 1: Software sets the bit to force a watchdog timer refresh.
SWDT	Start watchdog timer. 0: Stop WDT. 1: Start WDT.

Watchdog Timer Data/Reload Register (WDTD)

Location	7	6	5	4	3	2	1	0	Reset Value
085H	Watchdog Timer Data/Reload								00000000b

Symbol	Function
WDTD	Initial/Reload value in Watchdog Timer. New value won't be effective until WDT is set.

PCA Timer/Counter Control Register (CCON)

Location	7	6	5	4	3	2	1	0	Reset Value
D8H	CF	CR	-	CCF4	CCF3	CCF2	CCF1	CCF0	00x00000b

Symbol	Function
CF	PCA Timer/Counter Overflow Flag: Set by hardware when the PCA timer/counter rolls over. This generates an interrupt request if the ECF interrupt enable bit in CMOD is set. CF can be set by hardware or software but can be cleared only by software.
CR	PCA Timer/Counter Run Control Bit: Set and Cleared by software to turn the PCA timer/counter on and off.
CCF[4:0]	PCA Module Compare/Capture Flags: Set by hardware when a match or capture occurs. This generates a PCA interrupt request if the ECCFx interrupt enable bit in the corresponding CCAPMx register is set. Must be cleared by software.

PCA Timer/Counter Mode Register (CMOD)

Location	7	6	5	4	3	2	1	0	Reset Value
D9H	CIDL	WDTE	-	-	-	CPS1	CPS0	ECF	00xxx000b

Symbol	Function
CIDL	PCA Timer/Counter Idle Control: 0: Allows the PCA timer/counter to run during idle mode. 1: Disables the PCA timer/counter during idle mode.
WDTE	Watchdog Timer Enable: 0: Disables the PCA watchdog timer output. 1: Enables the PCA watchdog timer output on PCA module 4.
CPS1,CPS0	PCA Timer/Counter Input Select:

CPS1	CPS0	
0	0	f_{OSC} /12
0	1	f_{OSC} /4
1	0	Timer 0 overflow
1	1	External clock at ECI pin (maximum rate = f_{OSC} /8)

ECF	PCA Timer/Counter Interrupt Enable: 0: Disables the CF bit in the CCON register. 1: Enables the CF bit in the CCON register to generate an interrupt request.

TABLE 3-11: PCA MODULE MODES

ECOMy[1]	CAPPy[1]	CAPNy[1]	MATy[1]	TOGy[1]	PWNy[1]	ECCFy[1]	Module Code
0	0	0	0	0	0	0	No Operation
-	1	0	0	0	0	-	16-bit capture on positive-edge trigger at CEX[4:0]
-	0	1	0	0	0	-	16-bit capture on negative-edge trigger at CEX[4:0]
-	1	1	0	0	0	-	16-bit capture on positive-/negative-edge trigger at CEX[4:0]
1	0	0	1	0	0	-	Compare: software timer
1	0	0	1	1	0	-	Compare: high-speed output
1	0	0	0	0	1	0	Compare: 8-bit PWM
1	0	0	1	-	0	-	Compare: PCA WDT (CCAPM4 only)[2]

T3-11.0 555

1. y = 0, 1, 2, 3, 4
2. For PCA WDT mode, also set the WDTE bit in the CMOD register to enable the reset output signal

PCA Compare/Capture Module Mode Register (CCAPM[4:0])

Location	7	6	5	4	3	2	1	0	Reset Value
DAH	-	ECOM0	CAPP0	CAPN0	MAT0	TOG0	PWM0	ECCF0	x0000000b
DBH	-	ECOM1	CAPP1	CAPN1	MAT1	TOG1	PWM1	ECCF1	x0000000b
DCH	-	ECOM2	CAPP2	CAPN2	MAT2	TOG2	PWM2	ECCF2	x0000000b
DDH	-	ECOM3	CAPP3	CAPN3	MAT3	TOG3	PWM3	ECCF3	x0000000b
DEH	-	ECOM4	CAPP4	CAPN4	MAT4	TOG4	PWM4	ECCF4	x0000000b

Symbol	Function
ECOM[4:0]	Compare Modes: 0: Disables the module comparator function. 1: Enables the module comparator function. The comparator is used to implement the software timer, high-speed output, pulse width modulation, and watchdog timer modes.
CAPP[4:0]	0: Disables the capture function with capture triggered by a positive edge on pin CEX[4:0]. 1: Enables the capture function with capture triggered by a positive edge on pin CEX[4:0].
CAPN[4:0]	0: Disables the capture function with capture triggered by a negative edge on pin CEX[4:0]. 1: Enables the capture function with capture triggered by a negative edge on pin CEX[4:0].
MAT[4:0]	Match: Set ECOM[4:0] and MAT[4:0] to implement the software timer mode. 0: Disable the software timer mode 1: A match of the PCA timer/counter with the compare/capture register sets the CCF[4:0] bit in the CCON register, flagging an interrupt.
TOG[4:0]	Toggle: Set ECOM[4:0], MAT[4:0], and TOG[4:0] to implement the high-speed output mode. 0: Disable the toggle function 1: A match of the PCA timer/counter with the compare/capture register toggles the CEX[4:0] pin.
PWM[4:0]	Pulse Width Modulation Mode: 0: Disable the pulse width modulation mode 1: Configures the module for operation as an 8-bit pulse width modulator with output waveform on the CEX[4:0] pin.
ECCF[4:0]	Enable CCF[4:0] Interrupt: 0: Disables compare/capture flag CCF[4:0] in the CCON register to generate an interrupt request. 1: Enables compare/capture flag CCF[4:0] in the CCON register to generate an interrupt request.

SPI Control Register (SPCR)

Location	7	6	5	4	3	2	1	0	Reset Value
D5H	SPIE	SPE	DORD	MSTR	CPOL	CPHA	SPR1	SPR0	00000100b

Symbol	Function
SPIE	If both SPIE and ES are set to one, SPI interrupts are enabled.
SPE	SPI enable bit. 0: Disables SPI. 1: Enables SPI and connects SS#, MOSI, MISO, and SCK to pins P1[4], P1[5], P1[6], P1[7].
DORD	Data Transmission Order. 0: MSB first in data transmission. 1: LSB first in data transmission.
MSTR	Master/Slave select. 0: Selects Slave mode. 1: Selects Master mode.
CPOL	Clock Polarity 0: SCK is low when idle (Active High). 1: SCK is high when idle (Active Low).
CPHA	Clock Phase control bit. 0: Shift triggered on the leading edge of the clock. 1: Shift triggered on the trailing edge of the clock.
SPR1, SPR0	SPI Clock Rate Select bits. These two bits control the SCK rate of the device configured as master. SPR1 and SPR0 have no effect on the slave. The relationship between SCK and the oscillator frequency, f_{OSC}, is as follows:

SPR1	SPR0	SCK = f_{OSC} divided by
0	0	4
0	1	16
1	0	64
1	1	128

SPI Status Register (SPSR)

Location	7	6	5	4	3	2	1	0	Reset Value
AAH	SPIF	WCOL	-	-	-	-	-	-	00xxxxxxb

Symbol	Function
SPIF	Upon completion of data transfer, this bit is set to 1. If SPIE =1 and ES =1, an interrupt is then generated. To clear, read SPSR and then access SPDR.
WCOL	Set if the SPI data register is written to during data transfer. To clear, read SPSR and then access SPDR.

SPI Data Register (SPDR)

Location	7	6	5	4	3	2	1	0	Reset Value
86H	SPD7	SPD6	SPD5	SPD4	SPD3	SPD2	SPD1	SPD0	00H

Power Control Register (PCON)

Location	7	6	5	4	3	2	1	0	Reset Value
87H	SMOD1	SMOD0	BOF	POF	GF1	GF0	PD	IDL	00010000b

Symbol	Function
SMOD1	Double Baud rate bit. If SMOD1 = 1, Timer 1 is used to generate the baud rate.
SMOD0	FE/SM0 Selection bit. 0: SCON[7] = SM0 1: SCON[7] = FE,
BOF	Brown-out detection status bit, this bit will not be affected by any other reset. BOF should be cleared by software. Power-on reset will also clear the BOF bit. 0: No Brown-out. 1: Brown-out occurred
POF	Power-on reset status bit, this bit will not be affected by any other reset. POF should be cleared by software. 0: No Power-on reset. 1: Power-on reset occurred
GF1	General-purpose flag bit.
GF0	General-purpose flag bit.
PD	Power-down bit. 0: Power-down mode is not activated. 1: Activates Power-down mode.
IDL	Idle mode bit. 0: Idle mode is not activated. 1: Activates Idle mode.

Serial Port Control Register (SCON)

Location	7	6	5	4	3	2	1	0	Reset Value
98H	SM0/FE	SM1	SM2	REN	TB8	RB8	TI	RI	00000000b

Symbol	Function
FE	Set SMOD0 = 1 to access FE bit. 0: No framing error 1: Framing Error. Set by receiver when an invalid stop bit is detected. This bit needs to be cleared by software.
SM0	SMOD0 = 0 to access SM0 bit. Serial Port Mode Bit 0
SM1	Serial Port Mode Bit 1

SM0	SM1	Mode	Description	Baud Rate[1]
0	0	0	Shift Register	f_{OSC}/6 (6 clock mode) or f_{OSC}/12 (12 clock mode)
0	1	1	8-bit UART	Variable
1	0	2	9-bit UART	f_{OSC}/32 or f_{OSC}/16 (6 clock mode) or f_{OSC}/64 or f_{OSC}/32 (12 clock mode)
1	1	3	9-bit UART	Variable

1. f_{OSC} = oscillator frequency

SM2	Enables the Automatic Address Recognition feature in Modes 2 or 3. If SM2 = 1 then RI will not be set unless the received 9th data bit (RB8) is 1, indicating an address, and the received byte is a Given or broadcast Address. In Mode 1, if SM2 = 1 then RI will not be activated unless a valid stop bit was received, and the received byte is a Given or Broadcast Address. In Mode 0, SM2 should be 0.
REN	Enables serial reception. 0: to disable reception. 1: to enable reception.
TB8	The 9th data bit that will be transmitted in Modes 2 and 3. Set or clear by software as desired.
RB8	In Modes 2 and 3, the 9th data bit that was received. In Mode 1, if SM2 - 0, RB8 is the stop bit that was received. In Mode 0, RB8 is not used.
TI	Transmit interrupt flag. Set by hardware at the end of the 8th bit time in Mode 0, or at the beginning of the stop bit in the other modes, in any serial transmission, Must be cleared by software.
RI	Receive interrupt flag. Set by hardware at the end of the8th bit time in Mode 0, or halfway through the stop bit time in the other modes, in any serial reception (except see SM2). Must be cleared by software.

4.0 FLASH MEMORY PROGRAMMING

The device internal flash memory can be programmed or erased using the following two methods:

- External Host Mode
- In-Application Programming (IAP) Mode

4.1 External Host Programming Mode

External Host Programming Mode allows the user to program the Flash memory directly without using the CPU. External Host Mode is entered by forcing PSEN# from a logic high to a logic low while RST input is being held continuously high. The device will stay in External Host Mode as long as RST = 1 and PSEN# = 0.

A Read-ID operation is necessary to “arm” the device in External Host Mode, and no other External Host Mode commands can be enabled until a Read-ID is performed. In External Host Mode, the internal Flash memory blocks are accessed through the re-assigned I/O port pins (see Figure 4-1 for details) by an external host, such as a MCU programmer, a PCB tester or a PC-controlled development board.

TABLE 4-1: EXTERNAL HOST MODE COMMANDS FOR SST89E564RD/SST89V564RD

Operation	RST	PSEN#	PROG#/ ALE	EA#	P3[7]	P3[6]	P2[7]	P2[6]	P0[7:0]	P3[5:4] P2[5:0]	P1[7:0]
Read-ID	V_{IH1}	V_{IL}	V_{IH}	V_{IH}	V_{IL}	V_{IL}	V_{IL}	V_{IL}	DO	AH	AL
Chip-Erase	V_{IH1}	V_{IL}	⇓	V_{IH}	V_{IH}	V_{IL}	V_{IL}	V_{IL}	X	X	X
Block-Erase	V_{IH1}	V_{IL}	⇓	V_{IH}	V_{IH}	V_{IH}	V_{IL}	V_{IH}	X	X	X
Sector-Erase	V_{IH1}	V_{IL}	⇓	V_{IH}	V_{IH}	V_{IL}	V_{IH}	V_{IH}	X	AH	AL
Byte-Program	V_{IH1}	V_{IL}	⇓	V_{IH}	V_{IH}	V_{IH}	V_{IH}	V_{IL}	DI	AH	AL
Byte-Verify (Read)	V_{IH1}	V_{IL}	V_{IH}	V_{IH}	V_{IH}	V_{IH}	V_{IL}	V_{IL}	DO	AH	AL
Select-Block0	V_{IH1}	V_{IL}	⇓	V_{IH}	V_{IH}	V_{II}	V_{II}	V_{IH}	X	55H	X
Select-Block1	V_{IH1}	V_{IL}	⇓	V_{IH}	V_{IH}	V_{II}	V_{II}	V_{IH}	X	A5H	X
Prog-SC0	V_{IH1}	V_{IL}	⇓	V_{IH}	V_{IH}	V_{IL}	V_{IL}	V_{IH}	X	5AH	X
Prog-SB1	V_{IH1}	V_{IL}	⇓	V_{IH}	V_{IH}	V_{IH}	V_{IH}	V_{IH}	X	X	X
Prog-SB2	V_{IH1}	V_{IL}	⇓	V_{IH}	V_{IL}	V_{IL}	V_{IH}	V_{IH}	X	X	X
Prog-SB3	V_{IH1}	V_{IL}	⇓	V_{IH}	V_{IL}	V_{IH}	V_{IL}	V_{IH}	X	X	X

T4-1.0 555

Note: Symbol ⇓ signifies a negative pulse and the command is asserted during the low state of PROG#/ALE input. All other combinations of the above input pins are invalid and may result in unexpected behaviors.

Note: V_{IL} = Input Low Voltage; V_{IH} = Input High Voltage; V_{IH1} = Input High Voltage (XTAL, RST); X = Don’t care; AL = Address low order byte; AH = Address high order byte; DI = Data Input; DO = Data Output

TABLE 4-2: EXTERNAL HOST MODE COMMANDS FOR SST89E554RC/SST89V554RC

Operation	RST	PSEN#	PROG#/ ALE	EA#	P3[7]	P3[6]	P2[7]	P2[6]	P0[7:0]	P3[5:4] P2[5:0]	P1[7:0]
Read-ID	V_{IH1}	V_{IL}	V_{IH}	V_{IH}	V_{IL}	V_{IL}	V_{IL}	V_{IL}	DO	AH	AL
Chip-Erase	V_{IH1}	V_{IL}	⇓	V_{IH}	V_{IH}	V_{IL}	V_{IL}	V_{IL}	X	X	X
Block-Erase	V_{IH1}	V_{IL}	⇓	V_{IH}	V_{IH}	V_{IH}	V_{IL}	V_{IH}	X	A[15:13]	X
Sector-Erase	V_{IH1}	V_{IL}	⇓	V_{IH}	V_{IH}	V_{IL}	V_{IH}	V_{IH}	X	AH	AL
Byte-Program	V_{IH1}	V_{IL}	⇓	V_{IH}	V_{IH}	V_{IH}	V_{IH}	V_{IL}	DI	AH	AL
Byte-Verify (Read)	V_{IH1}	V_{IL}	V_{IH}	V_{IH}	V_{IH}	V_{IH}	V_{IL}	V_{IL}	DO	AH	AL
Prog-SC0	V_{IH1}	V_{IL}	⇓	V_{IH}	V_{IH}	V_{IL}	V_{IL}	V_{IH}	X	5AH	X
Prog-SC1	V_{IH1}	V_{IL}	⇓	V_{IH}	V_{IH}	V_{IL}	V_{IL}	V_{IH}	X	AAH	X
Prog-SB1	V_{IH1}	V_{IL}	⇓	V_{IH}	V_{IH}	V_{IH}	V_{IH}	V_{IH}	X	X	X
Prog-SB2	V_{IH1}	V_{IL}	⇓	V_{IH}	V_{IL}	V_{IL}	V_{IH}	V_{IH}	X	X	X
Prog-SB3	V_{IH1}	V_{IL}	⇓	V_{IH}	V_{IL}	V_{IH}	V_{IL}	V_{IH}	X	X	X

T4-2.0 555

Note: Symbol ⇓ signifies a negative pulse and the command is asserted during the low state of PROG#/ALE input.
All other combinations of the above input pins are invalid and may result in unexpected behaviors.

Note: V_{IL} = Input Low Voltage; V_{IH} = Input High Voltage; V_{IH1} = Input High Voltage (XTAL, RST); X = Don't care; AL = Address low order byte; AH = Address high order byte; DI = Data Input; DO = Data Output; A[15:13] = 0xxb for Block 0 and A[15:13] = 111b for Block 1

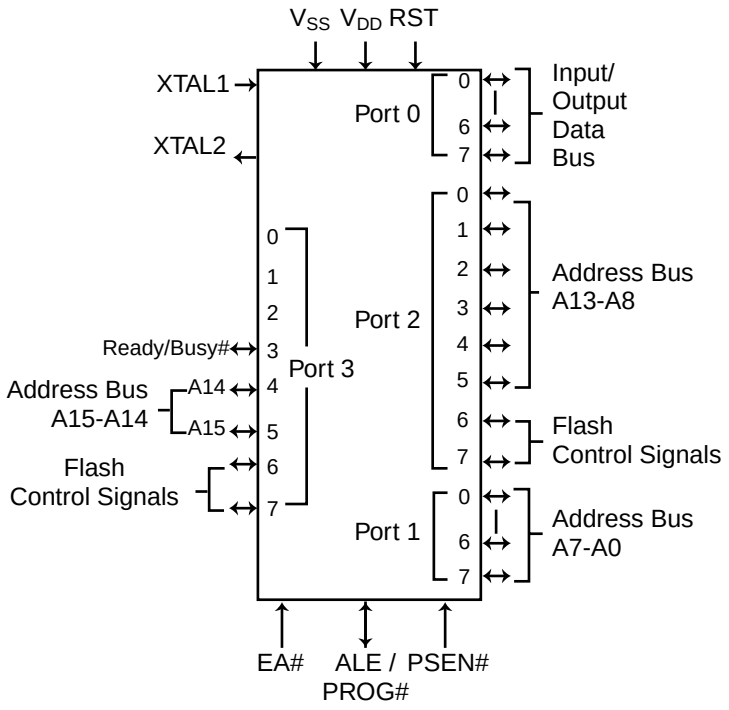

555 ILL F04.0

FIGURE 4-1: I/O PIN ASSIGNMENTS FOR EXTERNAL HOST MODE

4.1.1 Product Identification

The Read-ID command accesses the Signature Bytes that identify the device and the manufacturer as SST. External programmers primarily use these Signature Bytes in the selection of programming algorithms. The Read-ID command is selected by the command code of 0H on P3[7:6] and P2[7:6]. See Figure 4-2 for timing waveforms.

TABLE 4-3: SIGNATURE BYTES

	Address	Data
Manufacturer's ID	30H	BFH
Device ID		
SST89E564RD	31H	91H
SST89V564RD	31H	90H
SST89E554RC	31H	99H
SST89V554RC	31H	98H

T4-3.0 555

4.1.2 Arming Command

An arming command sequence must take place before any External Host Mode sequence command is recognized by the device. This prevents accidental triggering of External Host Mode Commands due to noise or programmer error. The arming command is as follows:

1. PSEN# goes low while RST is high. This will get the machine in External Host Mode, re-configuring the pins, and turning on the on-chip oscillator.
2. A Read-ID command is issued, and after 1 ms the External Host Mode commands can be issued.

After the above sequence, all other External Host Mode commands are enabled. Before the Read-ID command is received, all other External Host Mode commands received are ignored.

4.1.3 Detail Explanation of the External Host Mode Commands

The External Host Mode commands are Read-ID, Chip-Erase, Block-Erase, Sector-Erase, Byte-Program, Byte-Verify, Prog-SB1, Prog-SB2, Prog-SB3, Prog-SC0, Prog-SC1, Select-Block0, Select-Block1. See Tables 4-1 and 4-2 for all signal logic assignments, Figure 4-1 for I/O pin assignments, and Table 4-7 for the timing parameters. The critical timing for all Erase and Program commands is generated by an on-chip flash memory controller. The high-to-low transition of the PROG# signal initiates the Erase or Program commands, which are synchronized internally. The Read commands are asynchronous reads, independent of the PROG# signal level.

Following is a detailed description of the External Host Mode commands:

The Select-Block0 command enables Block 0 to be programmed in External Host Mode. Once this command is executed, all subsequent External Host Commands will be directed at Block 0. See Figure 4-3 for timing waveforms. This command applies to SST89E564RD/ SST89V564RD only.

The Select-Block1 command enables Block 1 (8 KByte Block) to be programmed. Once this command is executed, all subsequent External Host Commands that are directed to the address range below 2000H will be directed at Block 1. The Select-Block1 command only affects the lowest 8 KByte of the program address space. For addresses greater than or equal to 2000H, Block 0 is accessed by default. Upon entering External Host Mode, Block 1 is selected by default. See Figure 4-3 for timing waveforms. This command applies to SST89E564RD/ SST89V564RD only.

The Chip-Erase, Block-Erase, and Sector-Erase commands are used for erasing all or part of the memory array. Erased data bytes in the memory array will be erased to FFH. Memory locations that are to be programmed must be in the erased state prior to programming.

The Chip-Erase command erases all bytes in both memory blocks, regardless of any previous Select-Block0 or Select-Block1 commands. Chip-Erase ignores the Security Lock status and will erase the Security Lock, returning the device to its Unlocked state. The Chip-Erase command will also erase the SC0 bit. Upon completion of Chip-Erase command, Block 1 will be the selected block. See Figure 4-4 for timing waveforms.

The Block-Erase command erases all bytes in the selected memory blocks. This command will not be executed if the security lock is enabled. The selection of the memory block to be erased is determined by the prior execution Select-Block0 or Select-Block1 command. See Figure 4-6 for the timing waveforms.

The Sector-Erase command erases all of the bytes in a sector. The sector size for the flash memory is 128 Bytes. This command will not be executed if the Security lock is enabled. See Figure 4-7 for timing waveforms.

The Byte-Program command is used for programming new data into the memory array. Programming will not take place if any security locks are enabled. See Figure 4-8 for timing waveforms.

The Byte-Verify command allows the user to verify that the device correctly performed an Erase or Program command. This command will be disabled if any security locks are enabled. See Figure 4-11 for timing waveforms.

The Prog-SB1, Prog-SB2, Prog-SB3 commands program the security bits, the functions of these bits are described in the Security Lock section and also in Table 9-1. Once programmed, these bits can only be erased through a Chip-Erase command. See Figure 4-9 for timing waveforms.

Prog-SC0 command programs SC0 bit, which determines the state of SFCF[0] out of reset. Once programmed, SC0 can only be restored to an erased state via a Chip-Erase command. See Figure 4-10 for timing waveforms.

Prog-SC1 command programs SC1 bit, which determines the state of SFCF[1] out of reset. Once programmed, SC1 can only be restored to an erased state via a Chip-Erase command. See Figure 4-10 for timing waveforms. Prog-SC1 is for SST89E554RC/SST89V554RC only.

4.1.4 External Host Mode Clock Source

In External Host Mode, an internal oscillator will provide clocking for the device. The on-chip oscillator will be turned on as the device enters External Host Mode; i.e. when PSEN# goes low while RST is high. During External Host Mode, the CPU core is held in reset. Upon exit from External Host Mode, the internal oscillator is turned off.

4.1.5 Flash Operation Status Detection Via External Host Handshake

The device provides two methods for an external host to detect the completion of a flash memory operation to optimize the Program or Erase time. The end of a flash memory operation cycle can be detected by:

1. monitoring the Ready/Busy# bit at P3[3];
2. monitoring the Data# Polling bit at P0[3].

4.1.5.1 Ready/Busy# (P3[3])

The progress of the flash memory programming can be monitored by the Ready/Busy# output signal. P3[3] is driven low, some time after ALE/PROG# goes low during a flash memory operation to indicate the Busy# status of the Flash Control Unit (FCU). P3[3] is driven high when the Flash programming operation is completed to indicate the Ready status.

4.1.5.2 Data# Polling (P0[3])

During a Program operation, any attempts to read (Byte-Verify), while the device is busy, will receive the complement of the data of the last byte loaded (logic low, i.e. “0” for an erase) on P0[3] with the rest of the bits “0”. During a Program operation, the Byte-Verify command is reading the data of the last byte loaded, not the data at the address specified.

4.1.6 Step-by-step instructions to perform External Host Mode commands

To program data into the memory array, apply power supply voltage (V_{DD}) to V_{DD} and RST pins, and perform the following steps:

1. Maintain RST high and set PSEN# from logic high to low, in sequence according to the appropriate timing diagram.
2. Raise EA# High (V_{IH}).
3. Issue Read-ID command to enable the External Host Mode.
4. Verify that the memory blocks or sectors for programming is in the erased state, FFH. If they are not erased, then erase them using the appropriate Erase command.
5. Select the memory location using the address lines (P3[5:4], P2[5:0], P1[7:0]).
6. Present the data in on P0[7:0].
7. Pulse ALE/PROG#, observing minimum pulse width.
8. Wait for low to high transition on READY/BUSY# (P3[3]).
9. Repeat steps 5 - 8 until programming is finished.
10. Verify the flash memory contents.

4.1.7 Flash Memory Programming Timing Diagrams with External Host Mode

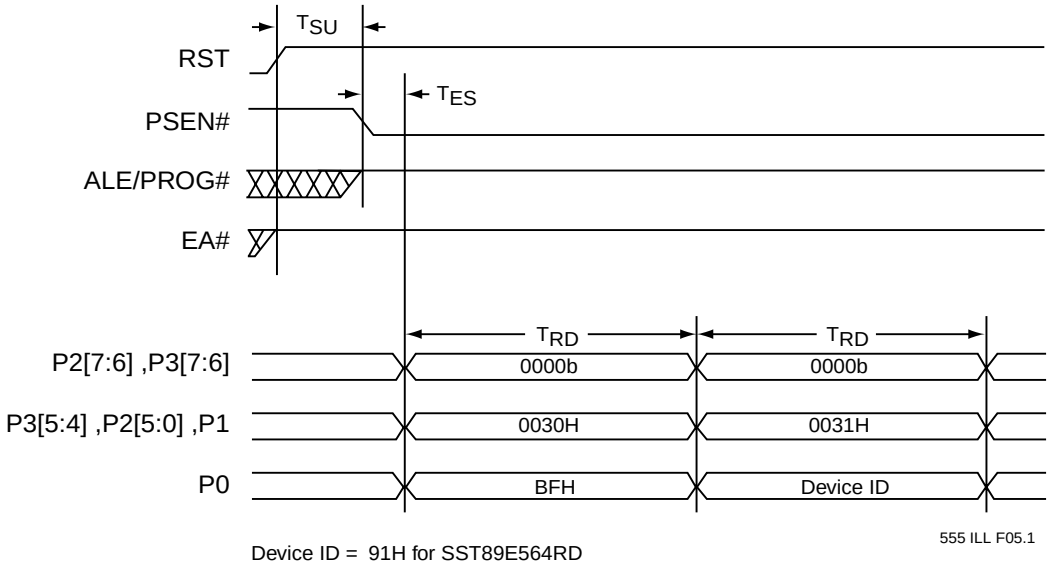

Device ID = 91H for SST89E564RD
90H for SST89V564RD
99H for SST89E554RC
98H for SST89V554RC

FIGURE 4-2: READ-ID
Reads chip signature and identification registers at the addressed location.

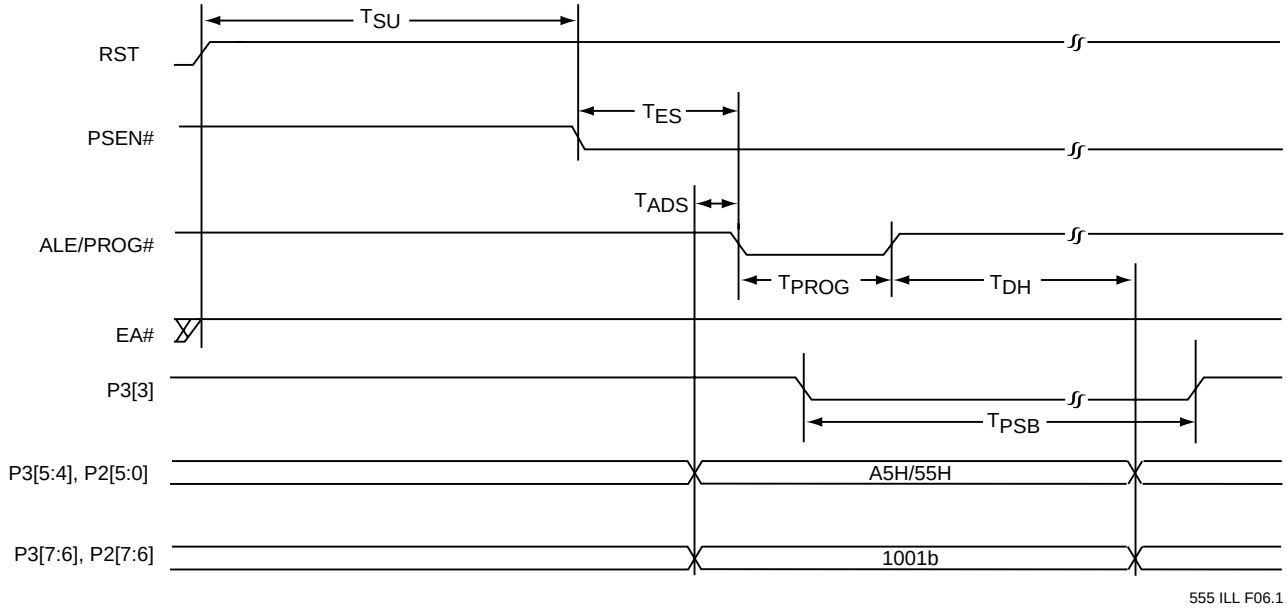

FIGURE 4-3: SELECT-BLOCK1 / SELECT-BLOCK0

Enables the selection of either of the flash memory blocks prior to issuing a Byte-Verify, Block-Erase, Sector-Erase, or Byte-Program. These commands apply to SST89E564RD/SST89V564RD only.

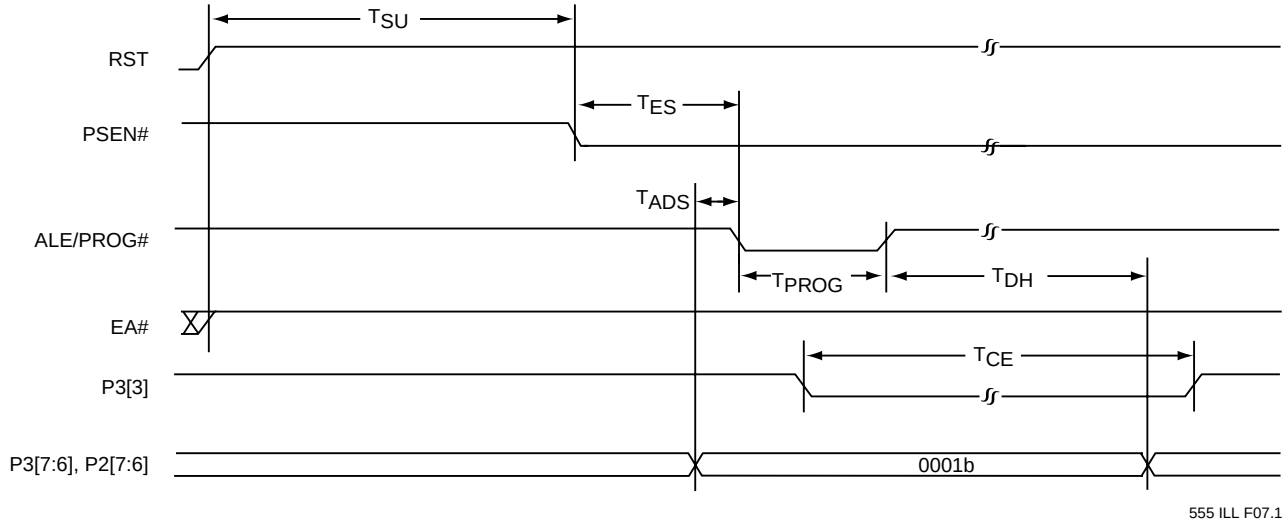

FIGURE 4-4: CHIP-ERASE
Erases both flash memory blocks. Security lock is ignored and the security bits are erased too.

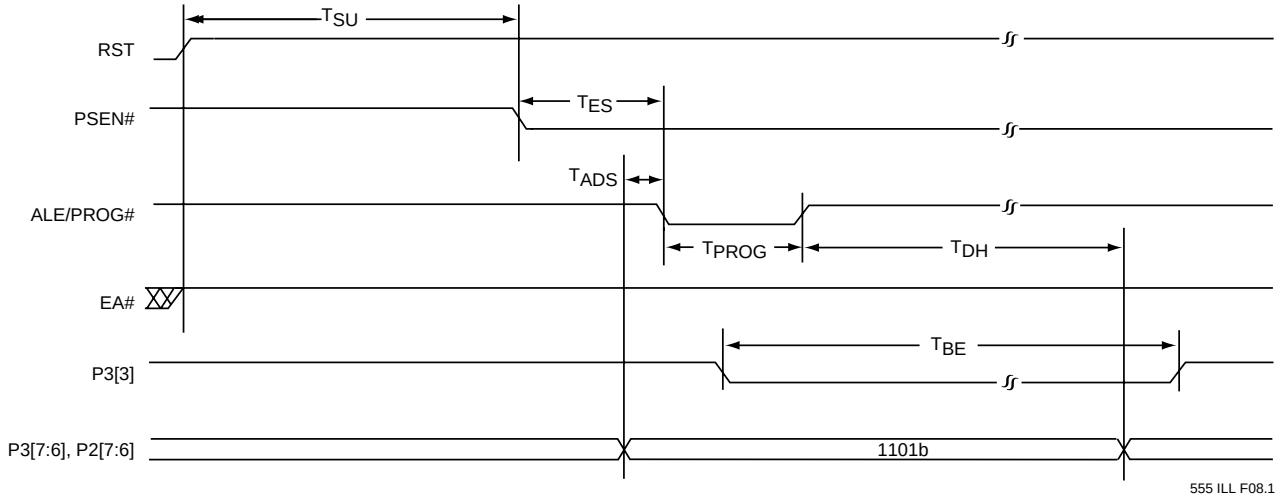

FIGURE 4-5: BLOCK-ERASE FOR SST89E564RD/SST89V564RD
Erases one of the flash memory blocks, if the security lock is not activated on that flash memory block.

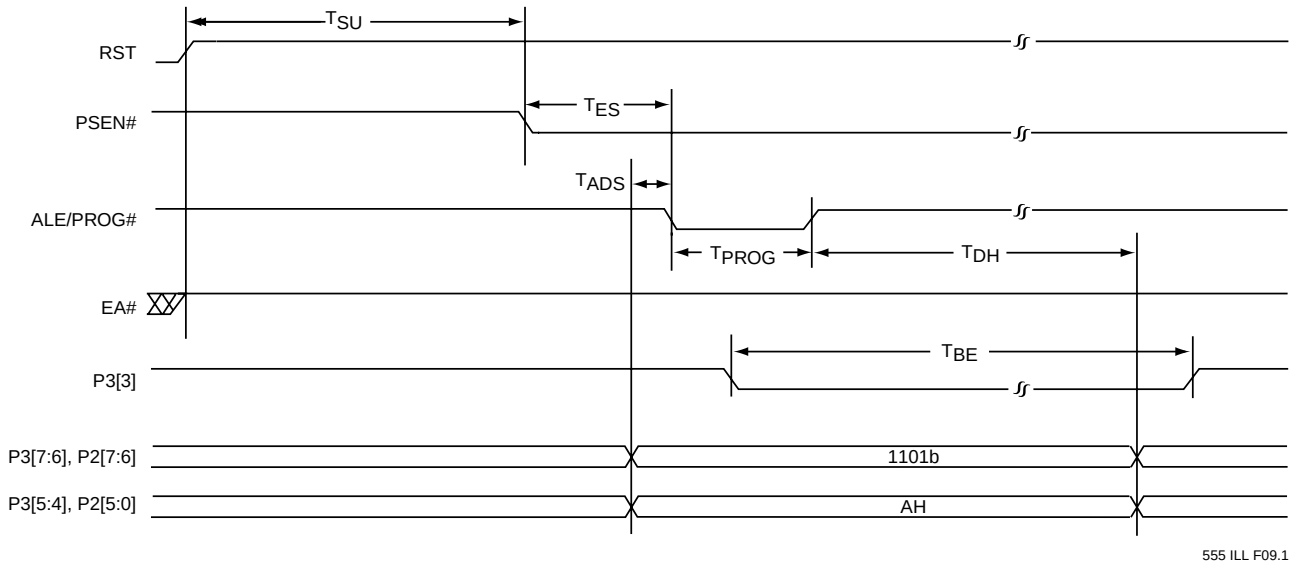

FIGURE 4-6: BLOCK-ERASE FOR SST89E554RC/SST89V554RC
Erases one of the flash memory blocks, if the security lock is not activated on that flash memory block.

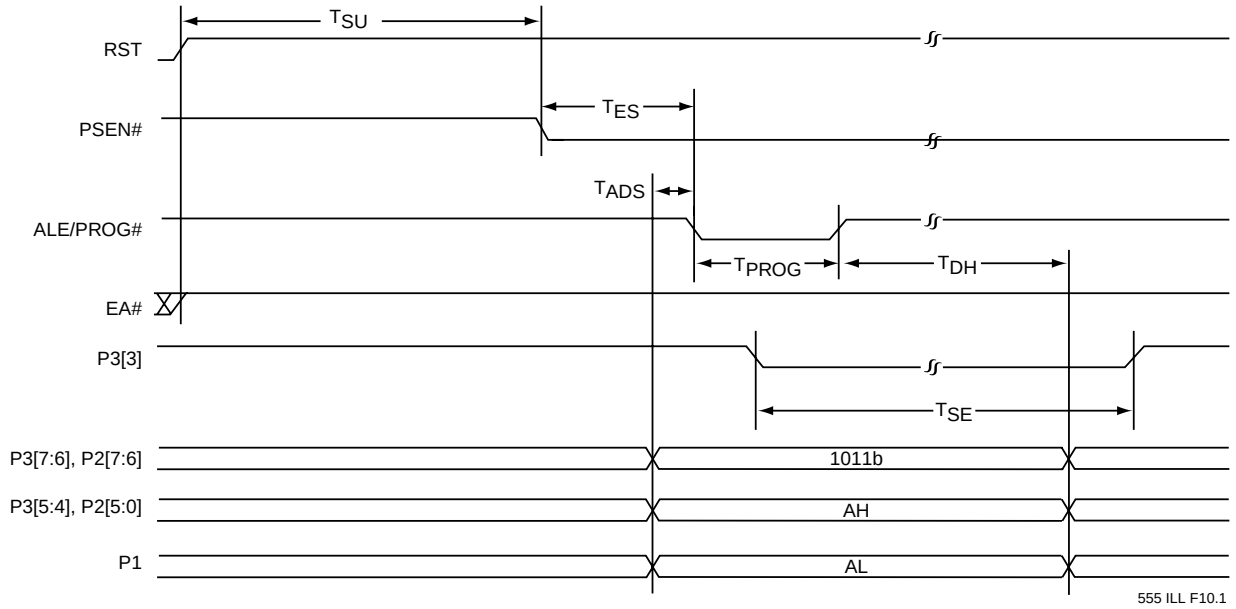

FIGURE 4-7: SECTOR-ERASE
Erases the addressed sector if the security lock is not activated on that flash memory block.

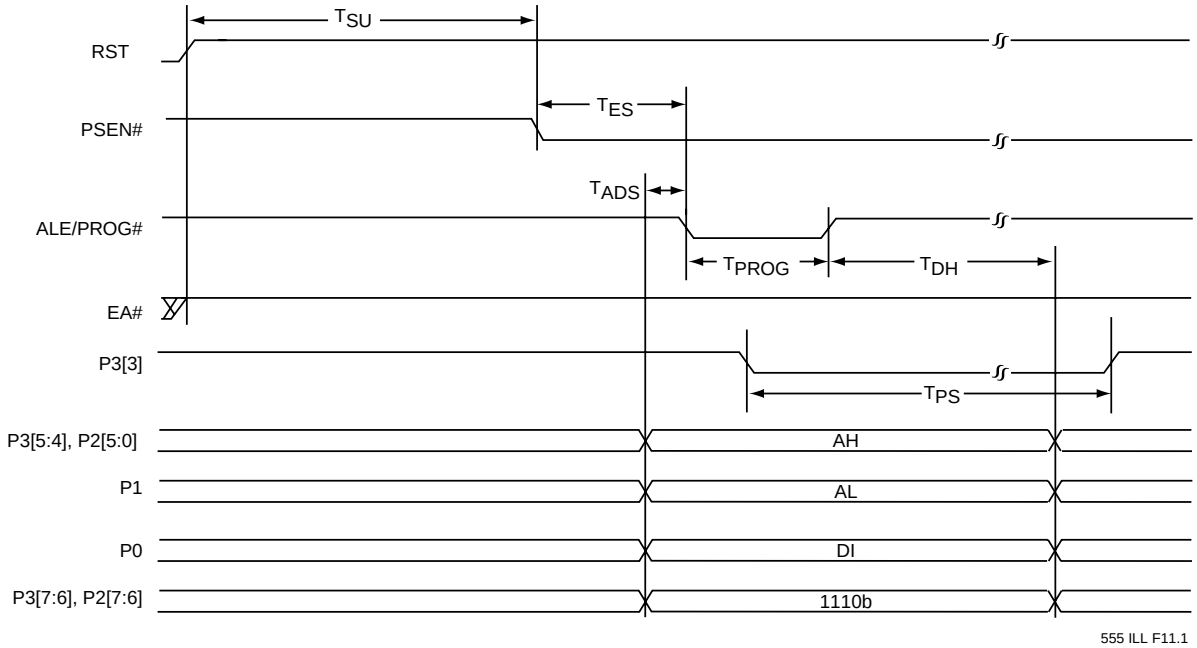

FIGURE 4-8: BYTE-PROGRAM

Programs the addressed code byte if the byte location has been successfully erased and not yet programmed. Byte-Program operation is only allowed when the security lock is not activated on that flash memory block.

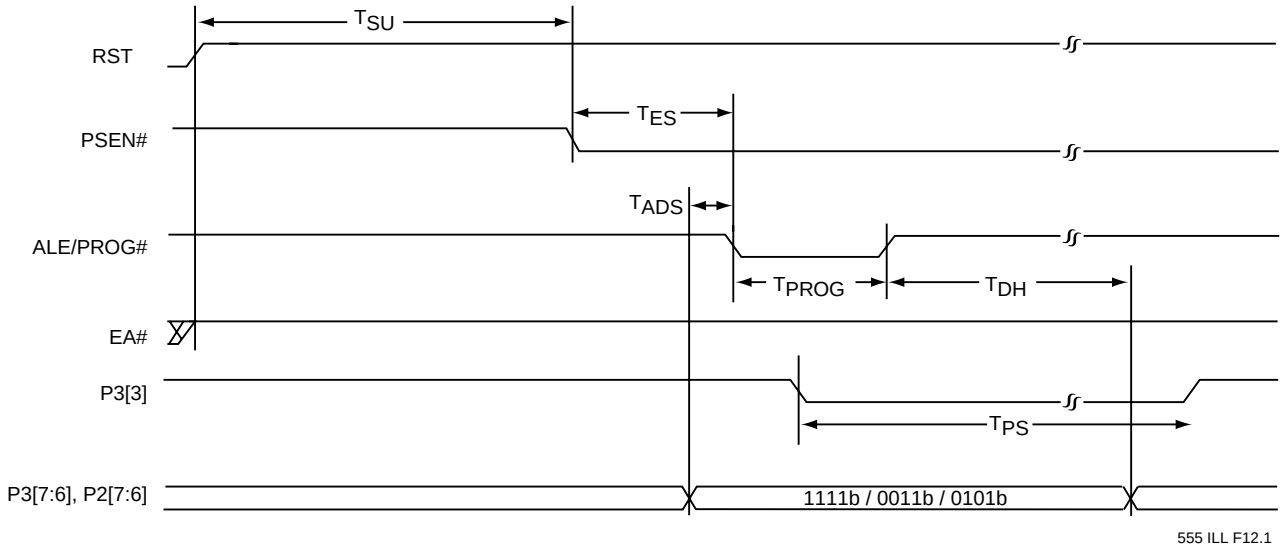

FIGURE 4-9: PROG-SB1 / PROG-SB2 / PROG-SB3

Programs the Security bits SB1, SB2 and SB3 respectively. Only a Chip-Erase will erase a programmed security bit.

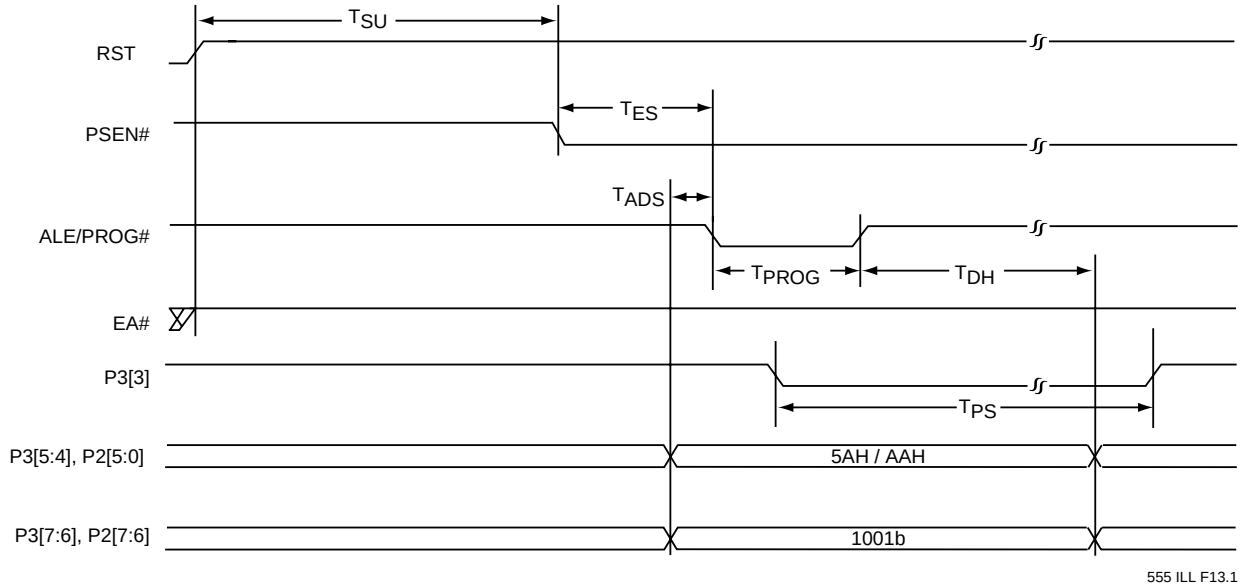

FIGURE 4-10: PROG-SC0 / PROG-SC1
Programs the start-up configuration bit SC0/SC1. Only a Chip-Erase will erase a programmed SC0/SC1 bit. Prog-SC1 applies to SST89E554RC/SST89V554RC only.

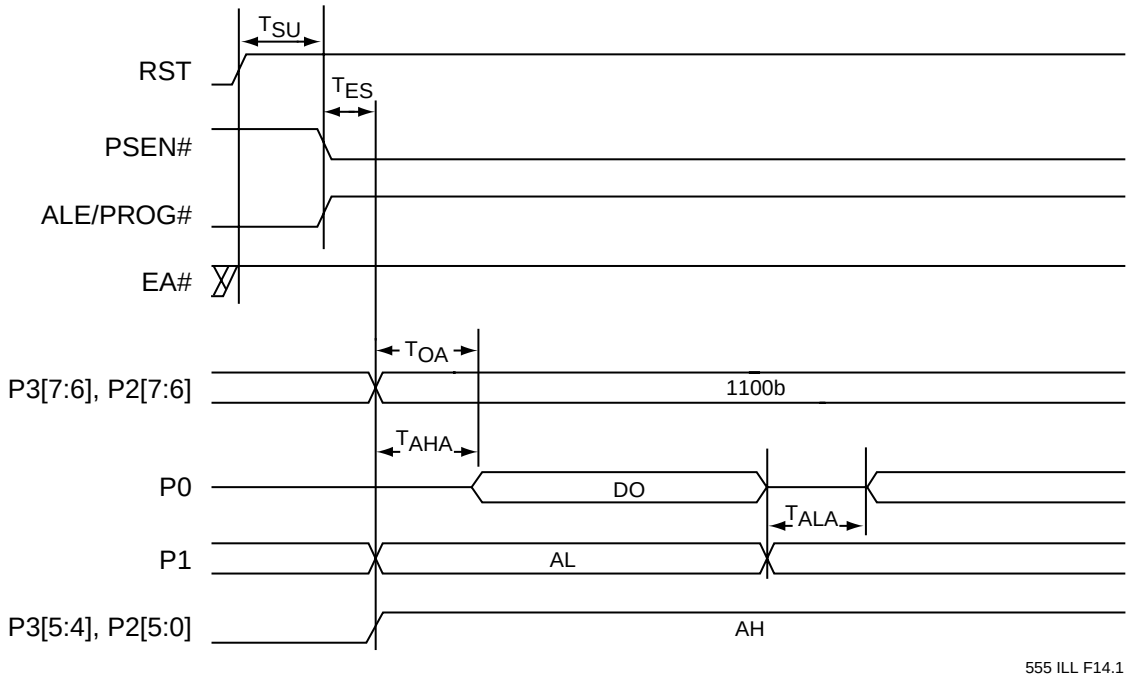

FIGURE 4-11: BYTE-VERIFY
Reads the code byte from the addressed flash memory location if the security lock is not activated on that flash memory block.

4.2 In-Application Programming Mode

The device offers either 72 or 40 KByte of In-Application Programmable flash memory. During In-Application Programming, the CPU of the microcontroller enters IAP Mode. The two blocks of flash memory allow the CPU to execute user code from one block, while the other is being erased or reprogrammed concurrently. The CPU may also fetch code from an external memory while all internal flash is being reprogrammed. The mailbox registers (SFST, SFCM, SFAL, SFAH, SFDT and SFCF) located in the Special Function Register (SFR), control and monitor the device's erase and program process.

Table 4-6 outlines the commands and their associated mailbox register settings.

4.2.1 In-Application Programming Mode Clock Source

During IAP Mode, both the CPU core and the flash controller unit are driven off the external clock. However, an internal oscillator will provide timing references for Program and Erase operations. The internal oscillator is only turned on when required, and is turned off as soon as the Flash operation is completed.

4.2.2 Memory Bank Selection for In-Application Programming Mode

With the addressing range limited to 16 bit, only 64 KByte of program address space is "visible" at any one time. As shown in Table 4-4, Bank Selection (the configuration of EA# and SFCF[1:0]), allows Block 1 memory to be overlaid on the lowest 8 KByte of Block 0 memory, making Block 1 reachable. The same concept is employed to allow both Block 0 and Block 1 Flash to be accessible to IAP operations. Code from a block that is not visible may not be used as a source to program another address. However, a block that is not "visible" may be programmed by code from the other block through mailbox registers.

The device allows IAP code in one block of memory to program the other block of memory, but may not program any location in the same block. If an IAP operation originates physically from Block 0, the target of this operation is implicitly defined to be in Block 1. If the IAP operation originates physically from Block 1, then the target address is implicitly defined to be in Block 0. If the IAP operation originates from External program space, then, the target will depend on the address and the state of Bank Select.

TABLE 4-4: IAP ADDRESS RESOLUTION FOR SST89E564RD/SST89V564RD

EA#	SFCF[1:0]	Address of IAP Inst.	Target Address	Block Being Programmed
1	00	>= 2000H (Block 0)	>= 2000H (Block 0)	None[1]
1	00	>= 2000H (Block 0)	< 2000H (Block 1)	Block 1
1	00	< 2000H (Block 1)	Any (Block 0)	Block 0
1	01, 10, 11	Any (Block 0)	>= 2000H (Block 0)	None[1]
1	01, 10, 11	Any (Block 0)	< 2000H (Block 1)	Block 1
0	00	From external	>= 2000H (Block 0)	Block 0
0	00	From external	< 2000H (Block 1)	Block 1
0	01, 10, 11	From external	Any (Block 0)	Block 0

T4-4.0 555

1. No operation is performed because code from one block may not program the same originating block

4.2.3 IAP Enable Bit

The IAP Enable Bit, SFCF[6], enables In-Application Programming mode. Until this bit is set all flash programming IAP commands will be ignored.

4.2.4 In-Application Programming Mode Commands

All of the following commands can only be initiated in the IAP Mode. In all situations, writing the control byte to the SFCM register will initiate all of the operations. All commands will not be enabled if the security locks are enabled on the selected memory block.

The Program command is for programming new data into the memory array. The portion of the memory array to be programmed should be in the erased state, FFH. If the memory is not erased, it should first be erased with an appropriate Erase command. **Warning: Do not attempt to write (program or erase) to a block that the code is currently fetching from. This will cause unpredictable program behavior and may corrupt program data.**

The Block-Erase command erases all bytes in one of the two memory blocks. The selection of the memory block to be erased is determined by the source of Block-Erase Command, as defined in Table 4-4.

The Sector-Erase command erases all of the bytes in a sector. The sector size for the flash memory Blocks is 128 Bytes. The selection of the sector to be erased is determined by the contents of SFAH and SFAL.

The Byte-Program command programs data into a single byte. The address is determined by the contents of SFAH and SFAL. The data byte is in SFDT.

The Byte-Verify command allows the user to verify that the device has correctly performed an Erase or Program command.

Byte-Verify command returns the data byte in SFDT if the command is successful. The user is required to check that the previous Flash operation has fully completed before issuing a Byte-Verify. Byte-Verify command execution time is short enough that there is no need to poll for command completion and no interrupt is generated.

Prog-SB3, Prog-SB2, Prog-SB1 commands are used to program the Security bits (see Table 9-1). Completion of any of these commands, the security options will be updated immediately.

Security bits previously in un-programmed state can be programmed by these commands. Prog-SB3, Prog-SB2 and Prog-SB1 commands should only reside in Block 1.

Prog-SC0 command is used to program the SC0 bit. This command only changes the SC0 bit and has no effect on BSEL bit until after a reset cycle.

SC0 bit previously in un-programmed state can be programmed by this command. The Prog-SC0 command should reside only in Block 1.

.

Prog-SC1 command is used to program the SC1 bit. This command only changes the SC1 bit and has no effect on BSEL bit until after a reset cycle.

SC1 bit previously in un-programmed state can be programmed by this command. The Prog-SC1 command should reside only in Block 1.

There are no IAP counterparts for the External Host commands Select-Block0 and Select-Block1.

4.2.5 Polling

A command that uses the polling method to detect flash operation completion should poll on the FLASH_BUSY bit (SFST[2]). When FLASH_BUSY de-asserts (logic 0), the device is ready for the next operation.

MOVC instruction may also be used for verification of the Programming and Erase operation of the flash memory. MOVC instruction will fail if it is directed at a flash block that is still busy.

4.2.6 Interrupt Termination

If interrupt termination is selected, (SFCM[7] is set), then an interrupt (INT1) will be generated to indicate flash operation completion. Under this condition, the INT1 becomes an internal interrupt source. The INT1# pin can now be used as a general purpose port pin and it cannot be the source of External Interrupt 1 during In-Application Programming.

In order to use an interrupt to signal flash operation termination. EX1 and EA bits of IE register must be set. The IT1 bit of TCON register must also be set for edge trigger detection.

TABLE 4-5: IN-APPLICATION PROGRAMMING MODE COMMANDS[1] FOR SST89E564RD/SST89V564RD

Operation	SFCM [6:0][2]	SFDT [7:0]	SFAH [7:0]	SFAL [7:0]
Block-Erase[3]	0DH	55H	X[4]	X
Sector-Erase[3]	0BH	X	AH[5]	AL[6]
Byte-Program[3]	0EH	DI[7]	AH	AL
Byte-Verify (Read)[3]	0CH	DO[8]	AH	AL
Prog-SB1[9]	0FH	AAH	X	X
Prog-SB2[9]	03H	AAH	X	X
Prog-SB3[9]	05H	AAH	X	X
Prog-SC0[9]	09H	AAH	5AH	X

T4-5.0 555

1. SFCF[6]=1 enables IAP commands; SFCF[6]=0 disables IAP commands.
2. Interrupt/Polling enable for flash operation completion
   SFCM[7] =1: Interrupt enable for flash operation completion
   0: polling enable for flash operation completion
3. Refer to Table 4-4 for address resolution
4. X can be V_{IL} or V_{IH}, but no other value.
5. AH = Address high order byte
6. AL = Address low order byte
7. DI = Data Input
8. DO = Data Output
   All other values are in hex
9. Instruction must be located in Block 1

.

TABLE 4-6: IN-APPLICATION PROGRAMMING MODE COMMANDS[1] FOR SST89E554RC/SST89V554RC

Operation	SFCM [6:0][2]	SFDT [7:0]	SFAH [7:0]	SFAL [7:0]
Block-Erase[3]	0DH	55H	AH[4]	X[5]
Sector-Erase[3]	0BH	X	AH[6]	AL[7]
Byte-Program[3]	0EH	DI[8]	AH	AL
Byte-Verify (Read)[3]	0CH	DO[9]	AH	AL
Prog-SB1[10]	0FH	AAH	X	X
Prog-SB2[10]	03H	AAH	X	X
Prog-SB3[10]	05H	AAH	X	X
Prog-SC0[10]	09H	AAH	5AH	X
Prog-SC1[10]	09H	AAH	AAH	X

T4-6.0 555

1. SFCF[6]=1 enables IAP commands; SFCF[6]=0 disables IAP commands.
2. Interrupt/Polling enable for flash operation completion
   SFCM[7] =1: Interrupt enable for flash operation completion
   0: polling enable for flash operation completion
3. Refer to Table 4-4 for address resolution
4. SFAH[7]=0: Selects Block 0; SFAH[7:5] = 111b selects Block 1
5. X can be V_{IL} or V_{IH}, but no other value.
6. AH = Address high order byte
7. AL = Address low order byte
8. DI = Data Input
9. DO = Data Output
   All other values are in hex
10. Instruction must be located in Block 1

TABLE 4-7: FLASH MEMORY PROGRAMMING/VERIFICATION PARAMETERS

Parameter[1,2]	Symbol	Min	Max	Units
Reset Setup Time	T_{SU}	3		µs
Read-ID Command Width	T_{RD}	1		µs
PSEN# Setup Time	T_{ES}	1.125		µs
Address, Command, Data Setup Time	T_{ADS}	0		ns
Chip-Erase Time	T_{CE}		125	ms
Block-Erase Time	T_{BE}		100	ms
Sector-Erase Time	T_{SE}		30	ms
Program Setup Time	T_{PROG}	1.2		µs
Address, Command, Data Hold	T_{DH}	0		ns
Byte-Program Time[3]	T_{PB}		50	µs
Select-Block Program Time	T_{PSB}		500	ns
Security bit Program Time	T_{PS}		80	µs
Verify Command Delay Time	T_{OA}		50	ns
Verify High Order Address Delay Time	T_{AHA}		50	ns
Verify Low Order Address Delay Time	T_{ALA}		50	ns

T4-7.0 555

1. Program and Erase times will scale inversely proportional to programming clock frequency.
2. All timing measurements are from the 50% of the input to 50% of the output.
3. Each byte must be erased before programming.

5.0 TIMERS/COUNTERS

The device has three 16-bit registers that can be used as either timers or event counters. The three Timers/Counters are denoted Timer 0 (T0), Timer 1 (T1), and Timer 2 (T2). Each is designated a pair of 8-bit registers in the SFRs. The pair consists of a most significant (high) byte and least significant (low) byte. The respective registers are TL0, TH0, TL1, TH1, TL2, and TH2.

6.0 SERIAL I/O

6.1 Enhanced Universal Asynchronous Receiver/Transmitter (UART)

The device Serial I/O port is a full duplex port that allows data to be transmitted and received simultaneously in hardware by the transmit and receive registers, respectively, while the software is performing other tasks. The transmit and receive registers are both located in the Serial Data Buffer (SBUF) special function register. Writing to the SBUF register loads the transmit register, and reading from the SBUF register obtains the contents of the receive register.

The UART has four modes of operation which are selected by the Serial Port Mode Specifier (SM0 and SM1) bits of the Serial Port Control (SCON) special function register. In all four modes, transmission is initiated by any instruction that uses the SBUF register as a destination register. Reception is initiated in mode 0 when the Receive Interrupt (RI) flag bit of the Serial Port Control (SCON) SFR is cleared and the Reception Enable/ Disable (REN) bit of the SCON register is set. Reception is initiated in the other modes by the incoming start bit if the REN bit of the SCON register is set.

6.1.1 Framing Error Detection

Framing Error Detection allows the serial port to automatically check for valid stop bits in Modes 1, 2 or 3. If a stop bit is missing the Framing Error bit (FE) will be set. The software can then check this bit after a reception to detect communication errors. The FE bit must be cleared by software.

The FE bit is located in SCON and shares the same bit address as SM0. The SMOD0 bit located in the PCON register determines which of these two bits is accessed. When SMOD0 = 0, SCON[7] will act as SM0. When SMOD0 = 1, SCON[7] will act as FE.

6.1.2 Automatic Address Recognition

Automatic Address Recognition (AAR) reduces the CPU time required to service the serial port in a multiprocessor environment. When using AAR, the serial port hardware will only generate an interrupt when it receives its own address, thus eliminating the software overhead required to compare addresses.

AAR is only available when using the serial port in either mode 2 or 3. Setting the SM2 bit in SCON enables AAR. Each slave must have its SM2 bit set when waiting for an address (9th bit = 1). The Receive Interrupt (RI) flag will only be set when the received byte matches either the Given or Broadcast Address. The slave then clears its SM2 bit to enable reception of data bytes (9th bit = 0) from the master.

The master can selectively communicate with groups of slaves by sending the Given Address. Addressing all slaves is also possible by sending the Broadcast address. The SADDR and SADEN special function registers define these addresses for each slave.

SADDR specifies a slaves individual address and SADEN is a mask byte that defines don't-care bits to form the Given address when combined with SADDR. The following is an example:

UART Slave 1		
SADDR	=	1111 0001
SADEN	=	1111 1010
GIVEN	=	1111 0x0x

UART Slave 2		
SADDR	=	1111 0011
SADEN	=	1111 1001
GIVEN	=	1111 0xx1

In this example Slave 1 can be distinguished from Slave 2 by using bits 0 and 1. Slave 1 will not respond to an address that has bit 1 set to 1 while Slave 2 will. Similarly, Slave 2 will not respond to an address that has bit 0 set to 0 while Slave 1 will. Both slaves will respond to an address of 1111 0x01b so this is the Broadcast Address. The Broadcast Addresses is formed by the logical OR of SADDR and SADEN with 0s treated as don't-care bits.

6.2 Serial Peripheral Interface (SPI)

The device SPI allows for high-speed full-duplex synchronous data transfer between the device and other compatible SPI devices.

Figure 6-1 shows the correspondence between master and slave SPI devices. The SCK pin is the clock output and input for the master and slave modes, respectively. The SPI clock generator will start following a write to the master devices SPI data register. The written data is then shifted out of the MOSI pin on the master device into the MOSI pin of the slave device. Following a complete transmission of one byte of data, the SPI clock generator is stopped and the SPIF flag is set. An SPI interrupt request will be generated if the SPI interrupt enable bit (SPIE) and the serial port interrupt enable bit (ES) are both set.

An external master drives the Slave Select input pin, SS#/P1[4], low to select the SPI module as a slave. If SS#/P1[4] has not been driven low, then the slave SPI unit is not active and the MOSI/P1[5] port can also be used as an input port pin.

CPHA and CPOL control the phase and polarity of the SPI clock. Figures 6-2 and 6-3 show the four possible combinations of these two bits.

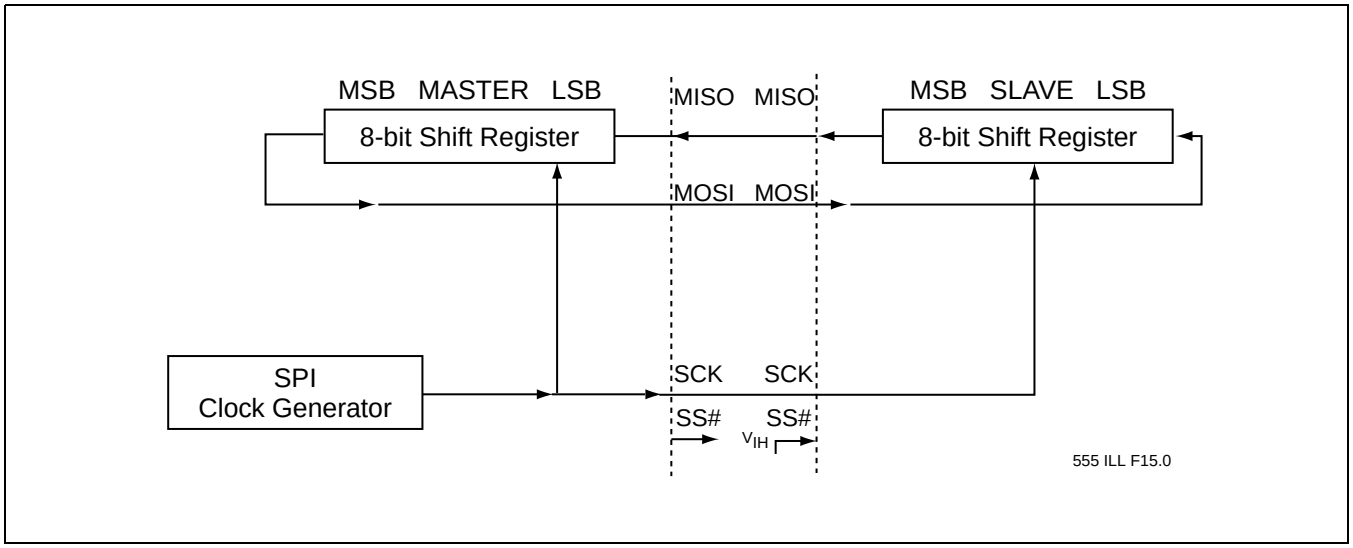

FIGURE 6-1: SPI MASTER-SLAVE INTERCONNECTION

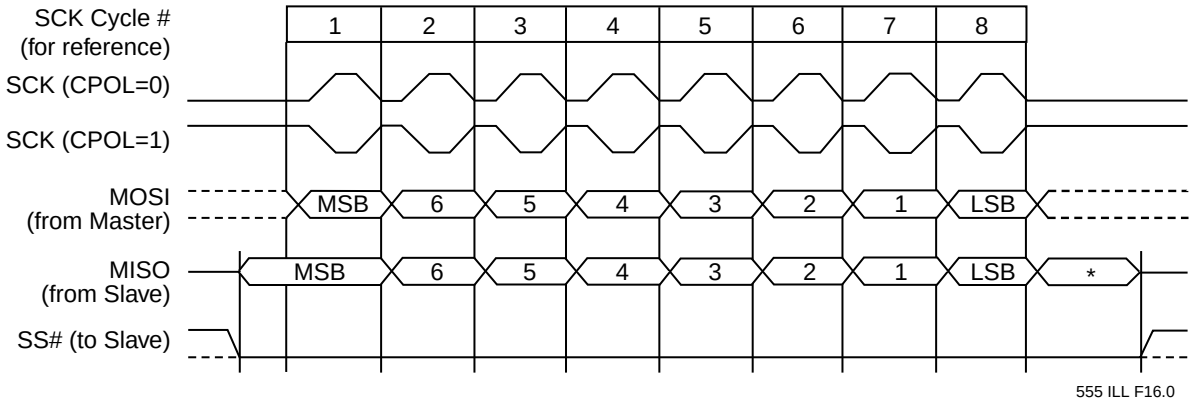

* Not defined, but normally MSB of next received byte

FIGURE 6-2: SPI TRANSFER FORMAT WITH CPHA = 0

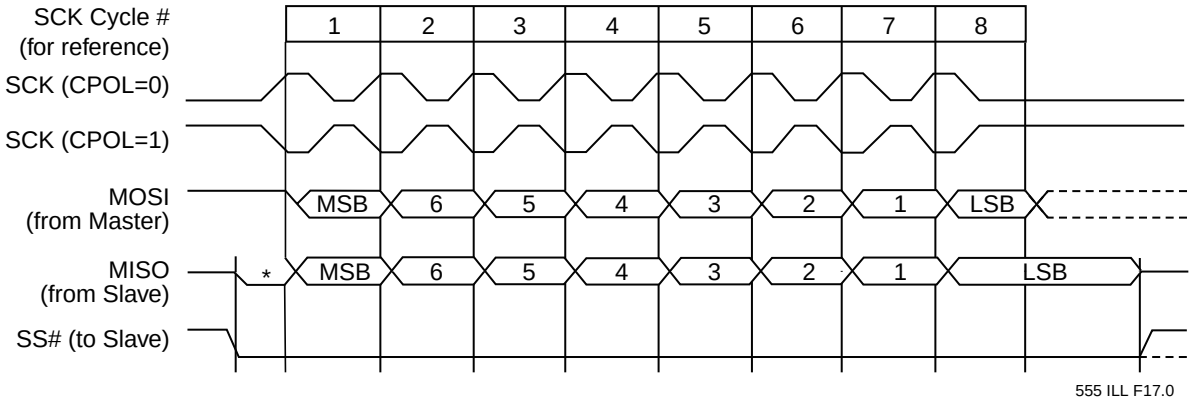

* Not defined but normally LSB of previously transmitted character

FIGURE 6-3: SPI TRANSFER FORMAT WITH CPHA = 1

7.0 WATCHDOG TIMER

The device offers a programmable Watchdog Timer (WDT) for fail safe protection against software deadlock and automatic recovery.

To protect the system against software deadlock, the user software must refresh the WDT within a user-defined time period. If the software fails to do this periodical refresh, an internal hardware reset will be initiated if enabled (WDRE= 1). The software can be designed such that the WDT times out if the program does not work properly.

The WDT in the device uses the system clock (XTAL1) as its time base. So strictly speaking, it is a watchdog counter rather than a watchdog timer. The WDT register will increment every 344064 crystal clocks. The upper 8-bits of the time base register (WDTD) are used as the reload register of the WDT.

The WDTS flag bit is set by WDT overflow and is not changed by WDT reset. User software can clear WDTS by writing “1” to it.

Figure 7-1 provides a block diagram of the WDT. Two SFRs (WDTC and WDTD) control watchdog timer operation. During idle mode, WDT operation is temporarily suspended, and resumes upon an interrupt exit from idle.

The time-out period of the WDT is calculated as follows:

$$\text{Period} = (255 - \text{WDT}) * 344064 * 1/f_{OSC}$$

where WDT is the value loaded into the WDT register and f_{OSC} is the oscillator frequency.

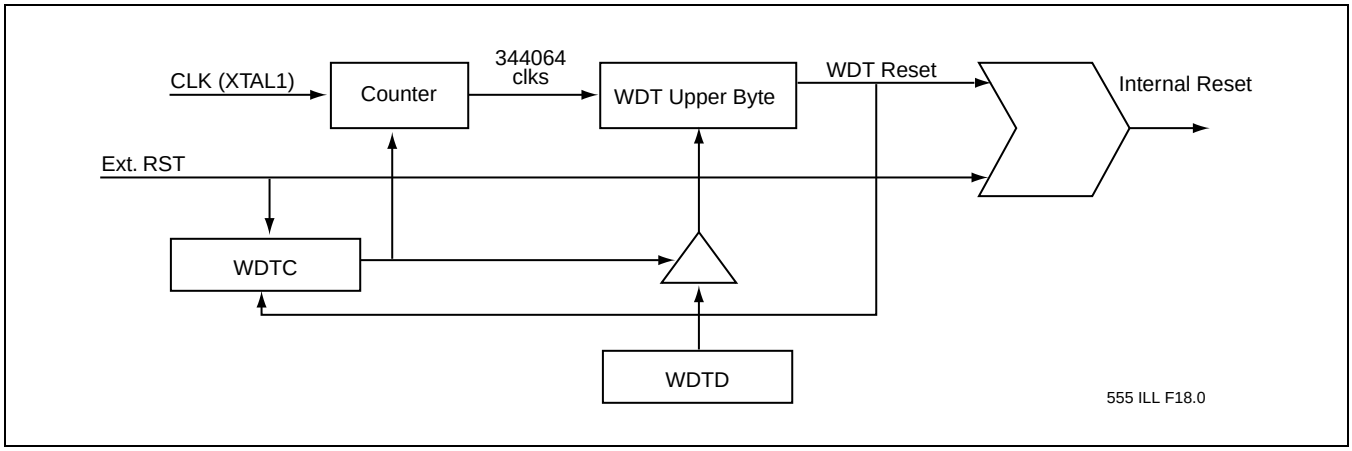

FIGURE 7-1: BLOCK DIAGRAM OF PROGRAMMABLE WATCHDOG TIMER

8.0 PROGRAMMABLE COUNTER ARRAY (PCA)

The device is equipped with an integrated Program Counter Array (PCA). The PCA consists of a dedicated timer/counter that serves as the common time base for an array of 5 compare/capture modules. Each of the modules can be programmed in 1 of 4 modes. Additionally, the 5th module can be programmed as a Watchdog Timer.

8.1 PCA Timer/Counter

The timer/counter for the PCA is a free-running 16 timer and consists of registers CH and CL (the high and low bytes of the count values). These registers can be read and written to at any time. The Count Pulse Select bits (CPS1 & CPS0) in the CMOD register configure the timer/counter to operate in 1 of 4 modes. See Table 8-1. The CMOD register also contains the Counter Idle (CIDL) bit. When CIDL = 1 the PCA timer/counter will be turned off when the MCU enters Idle Mode

.

TABLE 8-1: COUNT PULSE SELECTED BITS

CPS1	CPS0	PCA Count Pulse Selected
0	0	Internal Clock, FOSC / 12
0	1	Internal Clock, FOSC / 4
1	0	Timer 0 Overflow
1	1	External Clock at P1.2

T8-1.0 555

The Counter Run bit (CR) in CCON register turns the timer/counter on and off. When CR = 1 the timer/counter is running and when CR = 0 the timer/counter will be disabled. When the PCA timer/counter overflows the CF bit in CCON register will be set and if the ECF bit in CMOD register is set an interrupt will be generated.

8.2 PCA Compare/Capture Modules

Each of the 5 Compare/Capture modules has a mode register called CCAPMn (n = 0, 1, 2, 3, or 4) which selects the function it will perform. The seven possible modes and their associated values for CCAPMn are shown in Table 8-2.

TABLE 8-2: POSSIBLE MODES AND ASSOCIATED VALUES FOR CCAPMN

Module Function	CCAPMn Value	
	without interrupt enabled	with interrupt enabled
Capture Positive Edge Only	20H	21H
Capture Negative Edge Only	10H	11H
Capture Both Edges	30H	31H
16-Bit Software Timer	48H	49H
High Speed Output	4CH	4DH
Pulse Width Modulator	42H	43H
Watchdog Timer[1]	48H or 4CH	-

T8-2.0 555

1. Only for Module 4

Additionally each of the five modules has two 8-bit capture/compare registers (CCAPnH & CCAPnL) and an external input/output pin associated with it. The external input/output pins are P1.3 for Module 0, P1.4 for Module 1, P1.5 for Module 2, P1.6 for Module 3 and P1.7 for Module 4. Each module also has an associated event flag CCFn located in CCON register. These flags must be cleared by software.

Writing to CCAPnL will disable the compare feature of the corresponding module and writing to CCAPnH will re-enable it. Therefore, when using the compare feature (16-Bit Software Timer, High Speed Output, Pulse Width Modulator & Watchdog Timer modes) the software should always write to CCAPnL first and then write to CCAPnH second.

8.2.1 Capture Mode

Capture Mode is used to capture the PCA timer/counter value into a module's capture registers (CCAPnH & CCAPnL). The capture will occur on a positive edge, a negative edge or both edges of the input signal on the corresponding external input pin depending on which mode is selected. Also, the event flag (CCFn) is set and an interrupt is generated if ECCFn is set.

8.2.2 16-Bit Software Timer Mode

In the 16-bit Software Timer mode the PCA timer/counter value is compared with the 16-bit value pre-loaded into the module's compare registers (CCAPnH & CCAPnL). When a match occurs, the event flag (CCFn) is set and an interrupt is generated if ECCFn is set.

8.2.3 High Speed Output Mode

In the High Speed Output mode, the PCA timer/counter is compared with the 16-bit value pre-loaded into the module's compare registers (CCAPnH & CCAPnL). When a match occurs, the modules corresponding output pin is toggled. Additionally the event flag (CCFn) is set and an interrupt is generated if ECCFn is set. The frequency of the output is only dependent on the PCA timer/counter and will be the same for all 5 modules but the duty cycle can vary depending on the value pre-loaded into the compare registers.

8.2.4 Pulse Width Modulator

The Pulse Width Modulator mode generates 1-bit PWMs by comparing the low byte of the PCA timer (CL) with the low byte of the compare registers (CCAPnL). When CL < CCAPnL the corresponding output pin is low. When CL > CCAPnL the corresponding output pin is high. The frequency of the PWM is only dependent on the PCA timer/counter and will be the same for all 5 modules. The duty cycle will vary depending on the value in CCAPnL. CCAPnL can be changed dynamically by loading a new value into CCAPnH. This new value will be shifted into CCAPnL when CL rolls over from FFH to 00H.

8.2.5 Watchdog Timer

Only Module 4 can be programmed as a Watchdog Timer (but it can still be programmed to the other modes if the Watchdog Timer mode is not used). The Watchdog Timer compares the PCA timer/counter value (CH & CL) with Module 4's compare registers (CCAP4H & CCAP4L). When a match occurs, an internal reset will be generated if the WDTE bit in CMOD register is set. This internal reset will not cause the RST pin to be driven high. In order to hold of the reset the user must periodically change the compare value so it will never match the PCA timer.

9.0 SECURITY LOCK

The Security Lock protects against software piracy and prevents the contents of the flash from being read by unauthorized parties. It also protects against code corruption resulting from accidental erasing and programming to the internal flash memory. There are two different types of security locks in the device security lock system: Hard Lock and SoftLock.

9.1 Hard Lock

When Hard Lock is activated, MOVC or IAP instructions executed from an unlocked or SoftLocked program address space, are disabled from reading code bytes in Hard Locked memory blocks (See Table 9-2). Hard Lock can either lock both flash memory blocks or just lock the 8 KByte flash memory block (Block 1). All External Host and IAP commands except for Chip-Erase are ignored for memory blocks that are Hard Locked.

9.2 SoftLock

SoftLock allows flash contents to be altered under a secure environment. This lock option allows the user to update program code in the SoftLocked memory block through In-Application Programming Mode under a predetermined secure environment. For example, if Block 1 (8K) memory block is locked (Hard Locked or SoftLocked), and Block 0 (64K for SST89E564RD/SST89V564RD) memory block is SoftLocked, code residing in Block 1 can program Block 0. The following IAP mode commands issued through the command mailbox register, SFCM, executed from a Locked (Hard Locked or SoftLocked) block, can be operated on a SoftLocked block: Block-Erase, Sector-Erase, Byte-Program and Byte-Verify.

In External Host Mode, SoftLock behaves the same as a Hard Lock.

9.3 Security Lock Status

The three bits that indicate the device security lock status are located in SFST[7:5]. As shown in Figure 9-1 and Table 9-1, the three security lock bits control the lock status of the primary and secondary blocks of memory. There are four distinct levels of security lock status. In the first level, none of the security lock bits are programmed and both blocks are unlocked. In the second level, although both blocks are now locked and cannot be programmed, they are available for read operation via Byte-Verify. In the third level, three different options are available: Block 1 Hard Lock / Block 0 SoftLock, SoftLock on both blocks, and Hard Lock on both blocks. Locking both blocks is the same as Level

2 except read operation isn't available. The fourth level of security is the most secure level. It doesn't allow read/program of internal memory or boot from external memory. Please note that for unused combinations of the security lock bits, the chip will default to Level 4 status. For details on how to program the security lock bits refer to the External Host Mode and In-Application Programming Section.

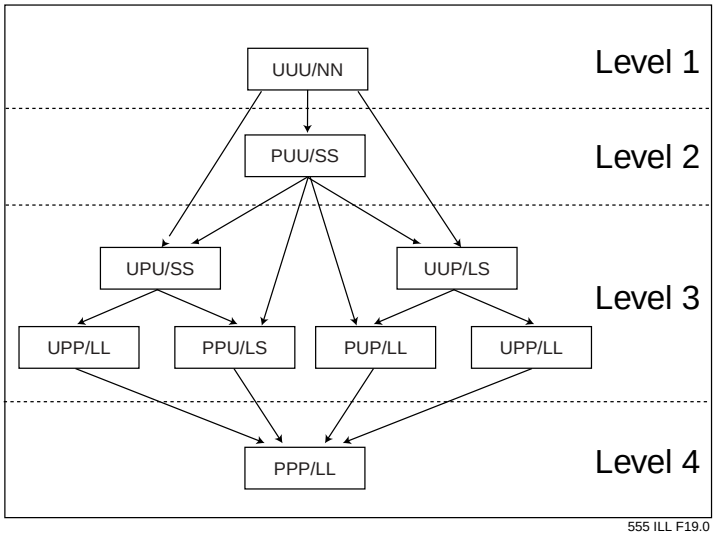

FIGURE 9-1: SECURITY LOCK LEVELS

Note: P = Programmed (Cell logic state = 0), U = Unprogrammed (Cell logic state = 1), N = Not Locked, L = Hard Locked, S = SoftLocked

TABLE 9-1: SECURITY LOCK OPTIONS

Level	Security Lock Bits[1,2]				Security Status of:		Security Type
	SFST[7:5]	SB1	SB2[1]	SB3[1]	Block 1	Block 0	
1	000	U	U	U	Unlock	Unlock	No Security Features are Enabled.
2	100	P	U	U	SoftLock	SoftLock	MOVC instructions executed from external program memory are disabled from fetching code bytes from internal memory, EA# is sampled and latched on Reset, and further programming of the flash is disabled.
3	011 101	U P	P U	P P	Hard Lock	Hard Lock	Level 2 plus Verify disabled, both blocks locked.
	010	U	P	U	SoftLock	SoftLock	Level 2 plus Verify disabled. Code in Block 1 may program Block 0 and vice versa.
	110 001	P U	P U	U P	Hard Lock	SoftLock	Level 2 plus Verify disabled. Code in Block 1 may program Block 0.
4	111	P	P	P	Hard Lock	Hard Lock	Same as Level 3 Hard Lock/Hard Lock, but MCU will start code execution from the internal memory regardless of EA#.

T9-1.0 555

1. P = Programmed (Cell logic state = 0), U = Unprogrammed (Cell logic state = 1).
2. SFST[7:5] = Security Lock Decoding Bits (SECD)

TABLE 9-2: SECURITY LOCK ACCESS TABLE

Level	SFST[7:5]	Source Address	Target Address[1]	External Host Byte-Verify Allowed[2]	IAP Byte-Verify Allowed	MOVC Allowed on 564RD	MOVC Allowed on 554RC
4	111b (Hard Lock on both blocks)	Block 0/1	Block 0/1	N	N	Y	Y
			External	N/A	N	N	N
		External	Block 0/1	N	N	N	N
			External	N/A	N	N	N
3	011b/101b (Hard Lock on both blocks)	Block 0/1	Block 0/1	N	N	Y	Y
			External	N	N	N	Y
		External	Block 0/1	N	N	N	N
			External	N/A	N	Y	Y
	001b/110b (Block 0 = SoftLock, Block 1 = Hard Lock)	Block 0	Block 0	N	N	Y	Y
			Block 1	N	N	N	N
			External	N/A	N	N	Y
		Block 1	Block 0	N	Y	Y	Y
			Block 1	N	N	Y	Y
			External	N/A	N	N	Y
		External	Block 0/1	N	N	N	N
			External	N/A	N	Y	Y
	010b (SoftLock on both blocks)	Block 0	Block 0	N	N	Y	Y
			Block 1	N	Y	Y	Y
			External	N/A	N	N	Y
		Block 1	Block 0	N	Y	Y	Y
			Block 1	N	N	Y	Y
			External	N/A	N	N	Y
		External	Block 0/1	N	N	N	N
			External	N/A	N	Y	Y
2	100b (SoftLock on both blocks)	Block 0	Block 0	Y	N	Y	Y
			Block 1	Y	Y	Y	Y
			External	N/A	N	N	Y
		Block 1	Block 0	Y	Y	Y	Y
			Block 1	Y	N	Y	Y
			External	N/A	N	N	Y
		External	Block 0/1	Y	N	N	N
			External	N/A	N	Y	Y
1	000b (Unlock)	Block 0	Block 0	Y	N	Y	Y
			Block 1	Y	Y	Y	Y
			External	N/A	N	N	Y
		Block 1	Block 0	Y	Y	Y	Y
			Block 1	Y	N	Y	Y
			External	N/A	N	N	Y
		External	Block 0/1	Y	Y	N	Y
			External	N/A	N	Y	Y

T9-2.0 555

1. Location of MOVC instruction
2. External Host Byte-Verify access does not depend on a source address.

10.0 RESET

A system reset initializes the MCU and begins program execution at program memory location 0000H. The reset input for the device is the RST pin. In order to reset the device, a logic level high must be applied to the RST pin for at least two machine cycles (24 clocks), after the oscillator becomes stable. ALE, PSEN# are weakly pulled high during reset. During reset, ALE and PSEN# output a high level in order to perform a proper reset. This level must not be affected by external element. A system reset will not affect the 1 KByte of on-chip RAM while the device is running, however, the contents of the on-chip RAM during power up are indeterminate. Following reset, all Special Function Registers (SFR) return to their reset values outlined in Tables 3-5 to 3-9.

10.1 Power-On Reset

At initial power up, the port pins will be in a random state until the oscillator has started and the internal reset algorithm has weakly pulled all pins high. **Powering up the device without a valid reset could cause the MCU to start executing instructions from an indeterminate location. Such undefined states may inadvertently corrupt the code in the flash.**

When power is applied to the device, the RST pin must be held high long enough for the oscillator to start up (usually several milliseconds for a low frequency crystal), in addition to two machine cycles for a valid Power-On Reset. An example of a method to extend the RST signal is to implement a RC circuit by connecting the RST pin to V_{DD} through a 10 µF capacitor and to V_{SS} through an 8.2KΩ resistor as shown in Figure 10-1. Note that if an RC circuit is being used, provisions should be made to ensure the V_{DD} rise time does not exceed 1 millisecond and the oscillator start-up time does not exceed 10 milliseconds.

For a low frequency oscillator with slow start-up time the reset signal must be extended in order to account for the slow start-up time. This method maintains the necessary relationship between V_{DD} and RST to avoid programming at an indeterminate location, which may cause corruption in the code of the flash. For more information on system level design techniques, please review Design Considerations for the SST FlashFlex51 Family Microcontroller Application Note.

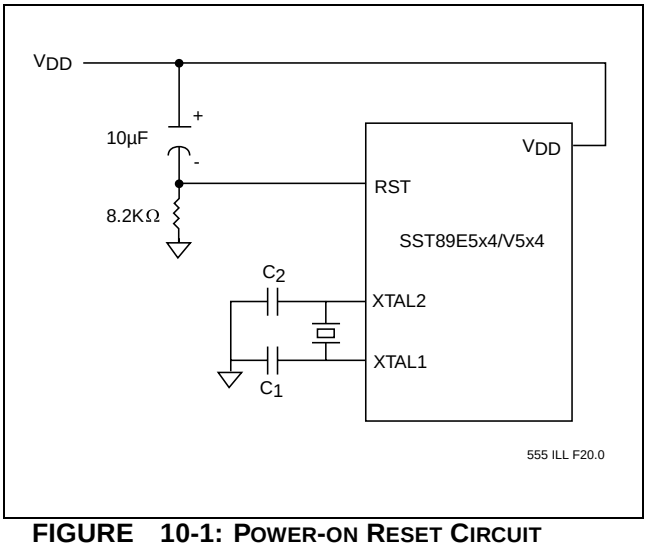

FIGURE 10-1: POWER-ON RESET CIRCUIT

10.2 Software Reset

The software reset is executed by changing SFCF[1] (SWR) from “0” to “1”. A software reset will reset the program counter to address 0000H. All SFR registers will be set to their reset values, except SFCF[1] (SWR), WDTC[2] (WDTS), and RAM data will not be altered.

10.3 Brown-out Detection Reset

The device includes a Brown-out detection circuit to protect the system from severe V_{DD} fluctuations. For Brown-out voltage parameters, please refer to Tables 11-3 and 11-4.

Brown-out interrupt can be enabled by setting the EBO bit in IEA register (address E8H, bit 3). If EBO bit is set and a Brown-out condition occurs, a Brown-out interrupt will be generated to execute the program at location 004BH. It is required that the EBO bit be cleared by software after the Brown-out interrupt is serviced. Clearing EBO bit when the Brown-out condition is active will properly reset the device.

If Brown-out interrupt is not enabled, a Brown-out condition will reset the program to resume execution at location 0000H.

10.4 Interrupt Priority and Polling Sequence

The device supports eight interrupt sources under a four level priority scheme. Table 10-1 summarizes the polling sequence of the supported interrupts. Note that the SPI serial interface and the UART share the same interrupt vector.

TABLE 10-1: INTERRUPT POLLING SEQUENCE

Description	Interrupt Flag	Vector Address	Interrupt Enable	Interrupt Priority	Arbitration Ranking	Wake-Up Power Down
Ext. Int0	IE0	0003H	EX0	PX0/H	1(highest)	yes
Brown-out	BOF	004BH	EBO	PBO/H	2	no
T0	TF0	000BH	ET0	PT0/H	3	no
Ext. Int1	IE1	0013H	EX1	PX1/H	4	yes
T1	TF1	001BH	ET1	PT1/H	5	no
UART/SPI	TI/RI/SPIF	0023H	ES	PS/H	6	no
T2	TF2, EXF2	002BH	ET2	PT2/H	7	no

T10-1.0 555

10.5 Power-Saving Modes

The device provides three power saving modes of operation for applications where power consumption is critical. The three power saving modes are: Idle, Power Down and Standby (Stop Clock).

10.5.1 Idle Mode

Idle mode is entered setting the IDL bit in the PCON register. In Idle mode, the program counter (PC) is stopped. The system clock continues to run and all interrupts and peripherals remain active. The on-chip RAM and the special function registers hold their data during this mode.

The device exits Idle mode through either a system interrupt or a hardware reset. Exiting Idle mode via system interrupt, the start of the interrupt clears the IDL bit and exits Idle mode. After exit the Interrupt Service Routine, the interrupted program resumes execution beginning at the instruction immediately following the instruction which invoked the Idle mode. A hardware reset starts the device similar to a power-on reset.

10.5.2 Power Down Mode

The Power Down mode is entered by setting the PD bit in the PCON register. In the Power Down mode, the clock is stopped and external interrupts are active for level sensitive interrupts only. To retain the on-chip RAM and all of the special function registers' values, the minimum V_{DD} level is 2.0V.

The device exits Power Down mode through either an enabled external level sensitive interrupt or a hardware reset. The start of the interrupt clears the PD bit and exits Power Down. Holding the external interrupt pin low restarts the oscillator, the signal must hold low at least 1024 clock cycles before bringing back high to complete the exit. After exit the interrupt service routine program execution resumes beginning at the instruction immediately following the instruction which invoked Power Down mode. A hardware reset starts the device similar to power-on reset.

To exit properly out of Power Down, the reset or external interrupt should not be executed before the V_{DD} line is restored to its normal operating voltage. Be sure to hold V_{DD} voltage long enough at its normal operating level for the oscillator to restart and stabilize (normally less than 10 ms).

10.5.3 Standby Mode (Stop Clock)

Standby mode is similar to Power Down mode, except that Power Down mode is initiated by a software command and Standby mode is initiated by external hardware gating off the external clock to the device.The on-chip SRAM and SFR data are maintained in Standby mode. The device resumes operation at the next instruction when the clock is reapplied to the part.

Table 10-2 outlines the different power-saving modes, including entry and exit procedures and MCU functionality.

TABLE 10-2: POWER SAVING MODES

Mode	Initiated by	State of MCU	Exited by
Idle Mode	Software (Set IDL bit in PCON)	CLK is running. Interrupts, serial port and timers/counters are active. Program Counter is stopped. ALE and PSEN# signals at a HIGH level during Idle. All registers remain unchanged.	Enabled interrupt or hardware reset. Start of interrupt clears IDL bit and exits Idle mode, after the ISR RETI instruction, program resumes execution beginning at the instruction following the one that invoked Idle mode. A user could consider placing two or three NOP instructions after the instruction that invokes idle mode to eliminate any problems. A hardware reset restarts the device similar to a power-on reset.
Power Down Mode	Software (Set PD bit in PCON)	CLK is stopped. On-chip SRAM and SFR data is maintained. ALE and PSEN# signals at a LOW level during Power Down. External Interrupts are only active for level sensitive interrupts, if enabled.	Enabled external level sensitive interrupt or hardware reset. Start of interrupt clears PD bit and exits Power Down mode, after the ISR RETI instruction program resumes execution beginning at the instruction following the one that invoked Power Down mode. A user could consider placing two or three NOP instructions after the instruction that invokes Power Down mode to eliminate any problems. A hardware reset restarts the device similar to a power-on reset.
Standby (Stop Clock) Mode	External hardware gates OFF the external clock input to the MCU. This gating should be synchronized with an input clock transition (low-to-high or high-to-low).	CLK is frozen. On-chip SRAM and SFR data is maintained. ALE and PSEN# are maintained at the levels prior to the clock being frozen.	Gate ON external clock. Program execution resumes at the instruction following the one during which the clock was gated off.

T10-2.0 555

10.6 Clock Input Options

Shown in Figure 10-2 are the input and output of an internal inverting amplifier (XTAL1, XTAL2), which can be configured for use as an on-chip oscillator.

When driving the device from an external clock source, XTAL2 should be left disconnected and XTAL1 should be driven.

At start-up, the external oscillator may encounter a higher capacitive load at XTAL1 due to interaction between the amplifier and its feedback capacitance. However, the capacitance will not exceed 15 pF once the external signal meets the V_{IL} and V_{IH} specifications.

10.7 Recommended Capacitor Values for Crystal Oscillator

Crystal manufacturer, supply voltage, and other factors may cause circuit performance to differ from one application to another. C1 and C2 should be adjusted appropriately for each design. The table below, shows the typical values for C1 and C2 at a given frequency. If following the satisfactory selection of all external components, the circuit is still over driven, a series resistor, Rs, may be added.

RECOMMENDED VALUES FOR CRYSTAL OSCILLATOR

Frequency	C1 and C2	R_S (Optional)
< 8MHz	90-110pF	100Ω
8-12MHz	18-22pF	200Ω
>12MHz	18-22pF	200Ω

More specific information about on-chip oscillator design can be found in *FlashFlex 51 Oscillator Circuit Design Considerations* Application Note.

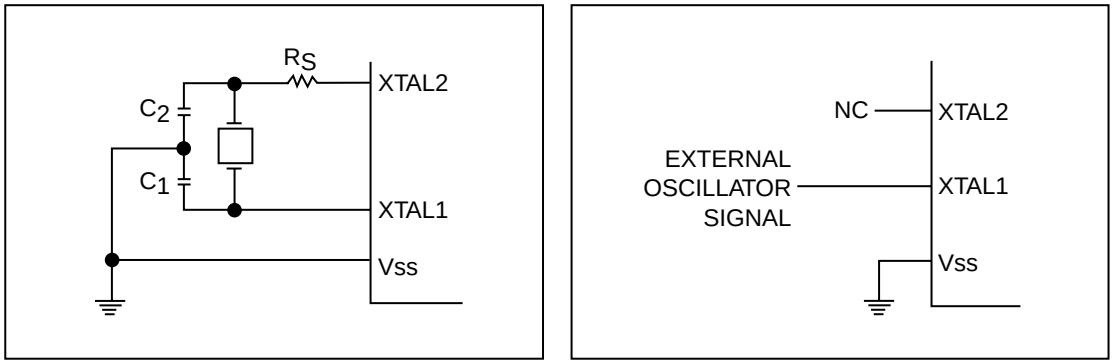

Using the On-Chip Oscillator

External Clock Drive

555 ILL F21.0

FIGURE 10-2: OSCILLATOR CHARACTERISTICS

11.0 ELECTRICAL SPECIFICATION

Absolute Maximum Stress Ratings (Applied conditions greater than those listed under “Absolute Maximum Stress Ratings” may cause permanent damage to the device. This is a stress rating only and functional operation of the device at these conditions or conditions greater than those defined in the operational sections of this data sheet is not implied. Exposure to absolute maximum stress rating conditions may affect device reliability.)

Ambient Temperature Under Bias . . . . . -55°C to +125°C
Storage Temperature . . . . . -65°C to + 150°C
Voltage on EA# Pin to V_{SS} . . . . . -0.5V to +14.0V
Transient Voltage (<20ns) on Any Other Pin to V_{SS} . . . . . -1.0V to +6.5V
Maximum I_{OL} per I/O Pins P1.5, P1.6, P1.7. . . . . 20mA
Maximum I_{OL} per I/O for All Other Pins 15mA
Package Power Dissipation Capability (T_a = 25°C) 1.5W
Through Hole Lead Soldering Temperature (10 Seconds). . . . . 300°C
Surface Mount Lead Soldering Temperature (3 Seconds) . . . . . 240°C
Output Short Circuit Current[1] . . . . . 50 mA

1. Outputs shorted for no more than one second. No more than one output shorted at a time. (Based on package heat transfer limitations, not device power consumption.

Note: This specification contains preliminary information on new products in production. The specifications are subject to change without notice.

11.1 Operation Range

TABLE 11-1: OPERATING RANGE

Symbol	Description	Min.	Max	Unit
T_a	Ambient Temperature Under Bias			
	Standard	0	+70	°C
	Industrial	-40	+85	°C
V_{DD}	Supply Voltage	2.7	5.5	V
f_{OSC}	Oscillator Frequency	0	40	MHz
	For In-Application Programming	0.25	40	MHz

T11-1.0 555

11.2 Reliability Characteristics

TABLE 11-2: RELIABILITY CHARACTERISTICS

Symbol	Parameter	Minimum Specification	Units	Test Method
N_{END}[1]	Endurance	10,000	Cycles	JEDEC Standard A117
T_{DR}[1]	Data Retention	100	Years	JEDEC Standard A103
I_{LTH}[1]	Latch Up	100 + I_{DD}	mA	JEDEC Standard 78

T11-2.0 555

1. This parameter is measured only for initial qualification and after a design or process change that could affect this parameter.

11.3 DC Electrical Characteristics

TABLE 11-3: DC ELECTRICAL CHARACTERISTICS
T_{amb} = 0°C TO +70°C OR -40°C TO +85°C, 40MHZ DEVICES; 4.5-5.5V; V_{SS} = 0V

Symbol	Parameter	Test Conditions	Min	Max	Units
V_{IL}	Input Low Voltage	4.5 < V_{DD} < 5.5	-0.5	0.2V_{DD} - 0.1	V
V_{IH}	Input High Voltage	4.5 < V_{DD} < 5.5	0.2V_{DD} + 0.9	V_{DD} + 0.5	V
V_{IH1}	Input High Voltage (XTAL1, RST)	4.5 < V_{DD} < 5.5	0.7V_{DD}	V_{DD} + 0.5	V
V_{OL}	Output Low Voltage (Ports 1.5, 1.6, 1.7)	V_{DD} = 4.5V			
		I_{OL} = 16mA		1.0	V
V_{OL}	Output Low Voltage (Ports 1, 2, 3)[1]	V_{DD} = 4.5V			
		I_{OL} = 100µA[2]		0.3	V
		I_{OL} = 1.6mA[2]		0.45	V
		I_{OL} = 3.5mA[2]		1.0	V
V_{OL1}	Output Low Voltage (Port 0, ALE, PSEN#)[1,3]	V_{DD} = 4.5V			
		I_{OL} = 200µA[2]		0.3	V
		I_{OL} = 3.2mA[2]		0.45	V
V_{OH}	Output High Voltage (Ports 1, 2, 3, ALE, PSEN#)[4]	V_{DD} = 4.5V			
		I_{OH} = -10µA	V_{DD} - 0.3		V
		I_{OH} = -30µA	V_{DD} - 0.7		V
		I_{OH} = -60µA	V_{DD} - 1.5		V
V_{OH1}	Output High Voltage (Port 0 in External Bus Mode)[4]	V_{DD} = 4.5V			
		I_{OH} = -200µA	V_{DD} - 0.3		V
		I_{OH} = -3.2mA	V_{DD} - 0.7		V
V_{BOD}	Brown-out Detection Voltage		3.85	4.15	V
I_{IL}	Logical 0 Input Current (Ports 1, 2, 3)	V_{IN} = 0.4V	-1	-75	µA
I_{TL}	Logical 1-to-0 Transition Current (Ports 1, 2, 3)[5]	V_{IN} = 2V		-650	µA
I_{LI}	Input Leakage Current (Port 0)	0.45 < V_{IN} < V_{DD}-0.3		±10	µA
R_{RST}	RST Pull-down Resistor		40	225	kΩ
C_{IO}	Pin Capacitance[6]	@ 1 MHz, 25°C		15	pF
I_{DD}	Power Supply Current[7]				
	In-Application Mode				
	@ 20 MHz			70	mA
	@ 40 MHz			88	mA
	Active Mode				
	@ 20 MHz			25	mA
	@ 40 MHz			45	mA
	Idle Mode				
	@ 20 MHz			9.5	mA
	@ 40 MHz			20	mA
	Standby (Stop Clock) Mode	T_{amb} = 0°C to +70°C		100	µA
		T_{amb} = -40°C to +85°C		125	µA
	Power Down Mode	Minimum V_{DD} = 2V			
		T_{amb} = 0°C to +70°C		40	µA
		T_{amb} = -40°C to +85°C		50	µA

TABLE 11-4: DC ELECTRICAL CHARACTERISTICS
T_{amb} = 0°C TO +70°C OR -40°C TO +85°C, 25MHZ DEVICES; 2.7-3.6V; V_{SS} = 0V

Symbol	Parameter	Test Conditions	Min	Max	Units
V_{IL}	Input Low Voltage	2.7 < V_{DD} < 3.3	-0.5	0.7	V
V_{IH}	Input High Voltage	2.7 < V_{DD} < 3.3	0.2V_{DD} + 0.9	V_{DD} + 0.5	V
V_{IH1}	Input High Voltage (XTAL1, RST)	2.7 < V_{DD} < 3.3	0.7V_{DD}	V_{DD} + 0.5	V
V_{OL}	Output Low Voltage (Ports 1.5, 1.6, 1.7)	V_{DD} = 2.7V			
		I_{OL} = 16mA		1.0	V
V_{OL}	Output Low Voltage (Ports 1, 2, 3)[1]	V_{DD} = 2.7V			
		I_{OL} = 100µA[2]		0.3	V
		I_{OL} = 1.6mA[2]		0.45	V
		I_{OL} = 3.5mA[2]		1.0	V
V_{OL1}	Output Low Voltage (Port 0, ALE, PSEN#)[1,3]	V_{DD} = 2.7V			
		I_{OL} = 200µA[2]		0.3	V
		I_{OL} = 3.2mA[2]		0.45	V
V_{OH}	Output High Voltage (Ports 1, 2, 3, ALE, PSEN#)[4]	V_{DD} = 2.7V			
		I_{OH} = -10µA	V_{DD} - 0.3		V
		I_{OH} = -30µA	V_{DD} - 0.7		V
		I_{OH} = -60µA	V_{DD} - 1.5		V
V_{OH1}	Output High Voltage (Port 0 in External Bus Mode)[4]	V_{DD} = 2.7V			
		I_{OH} = -200µA	V_{DD} - 0.3		V
		I_{OH} = -3.2mA	V_{DD} - 0.7		V
V_{BOD}	Brown-out Detection Voltage		2.25	2.55	V
I_{IL}	Logical 0 Input Current (Ports 1, 2, 3)	V_{IN} = 0.4V	-1	-75	µA
I_{TL}	Logical 1-to-0 Transition Current (Ports 1, 2, 3)[5]	V_{IN} = 2V		-650	µA
I_{LI}	Input Leakage Current (Port 0)	0.45 < V_{IN} < V_{DD}-0.3		±10	µA
R_{RST}	RST Pull-down Resistor			225	kΩ
C_{IO}	Pin Capacitance[6]	@ 1 MHz, 25°C		15	pF
I_{DD}	Power Supply Current[7]				
	In-Application Mode			70	mA
	Active Mode			22	mA
	Idle Mode			6.5	mA
	Standby (Stop Clock) Mode	T_{amb} = 0°C to +70°C		70	µA
		T_{amb} = -40°C to +85°C		88	µA
	Power Down Mode	Minimum V_{DD} = 2V			
		T_{amb} = 0°C to +70°C		40	µA
		T_{amb} = -40°C to +85°C		50	µA

T11-4.1 555

1. Under steady state (non-transient) conditions, I_{OL} must be externally limited as follows:
   Maximum I_{OL} per port pin: 15mA
   Maximum I_{OL} per 8-bit port: 26mA
   Maximum I_{OL} total for all outputs: 71mA
   If I_{OL} exceeds the test condition, V_{OH} may exceed the related specification. Pins are not guaranteed to sink current greater than the listed test conditions.
2. Capacitive loading on Ports 0 & 2 may cause spurious noise to be superimposed on the V_{OL}s of ALE and Ports 1 & 3. The noise due to external bus capacitance discharging into the Port 0 & 2 pins when the pins make 1-to-0 transitions during bus operations. In the worst cases (capacitive loading > 100pF), the noise pulse on the ALE pin may exceed 0.8V. In such cases, it may be desirable to qualify ALE with a Schmitt Trigger, or use an address latch with a Schmitt Trigger STROBE input.
3. Load capacitance for Port 0, ALE & PSEN#= 100pF, load capacitance for all other outputs = 80pF.

4. Capacitive loading on Ports 0 & 2 may cause the V_{OH} on ALE and PSEN# to momentarily fall below the V_{DD} - 0.7 specification when the address bits are stabilizing.
5. Pins of Ports 1, 2 & 3 source a transition current when they are being externally driven from 1 to 0. The transition current reaches its maximum value when V_{IN} is approximately 2V.
6. Pin capacitance is characterized but not tested. EA# is 25pF (max).
7. See Figures 11-1, 11-2, 11-3 and 11-4 for test conditions. Minimum V_{DD} for Power Down is 2.0V.

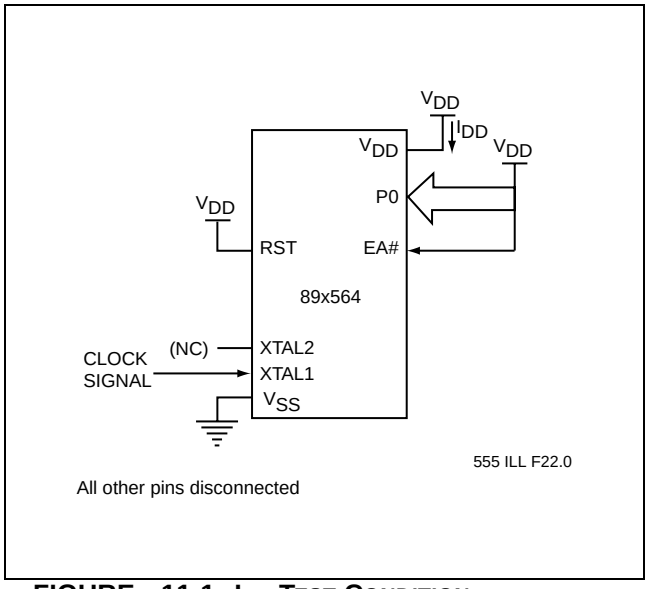

FIGURE 11-1: I_{DD} TEST CONDITION, ACTIVE MODE

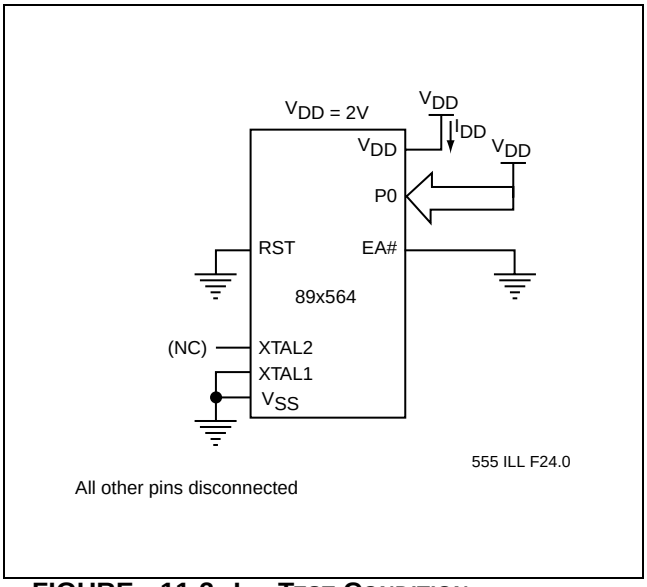

FIGURE 11-3: I_{DD} TEST CONDITION, POWER-DOWN MODE

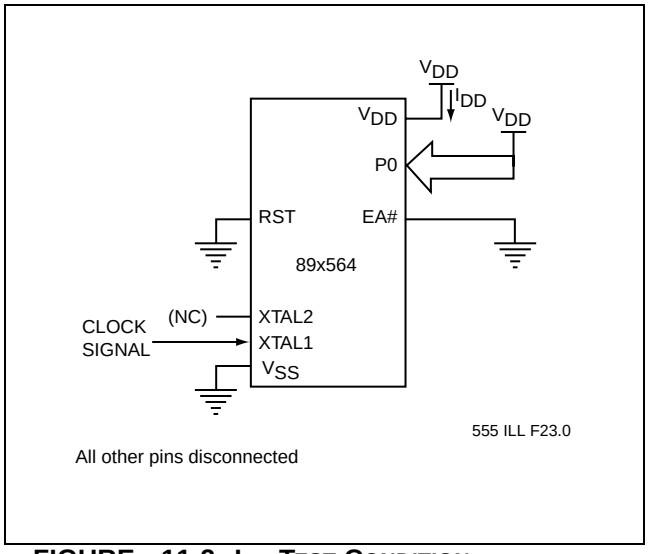

FIGURE 11-2: I_{DD} TEST CONDITION, IDLE MODE

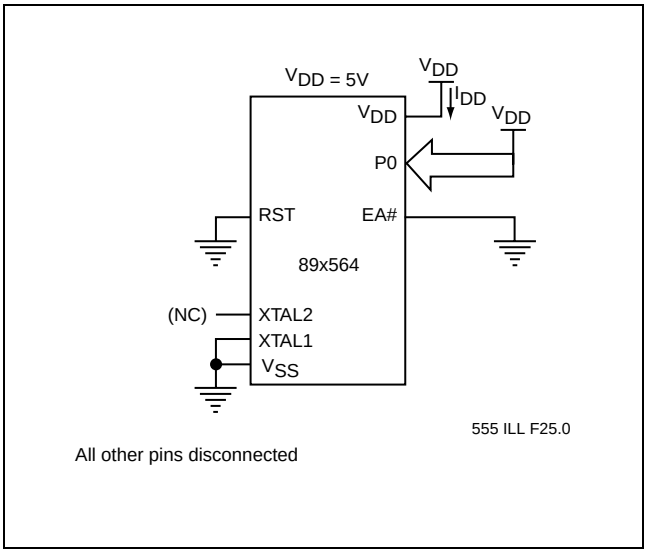

FIGURE 11-4: I_{DD} TEST CONDITION, STANDBY (STOP CLOCK) MODE

11.4 AC Electrical Characteristics

AC Characteristics: (Over Operating Conditions: Load Capacitance for Port 0, ALE#, and PSEN# = 100pF; Load Capacitance for All Other Outputs = 80pF)

TABLE 11-5: AC ELECTRICAL CHARACTERISTICS (1 OF 2)
T_{amb} = 0°C TO +70°C OR -40°C TO +85°C, V_{DD} = 2.7-3.6V @25MHz, 4.5-5.5V @ 40MHz, V_{SS} = 0

		Oscillator						
		25MHz		40MHz		Variable		
Symbol	**Parameter**	**Min**	**Max**	**Min**	**Max**	**Min**	**Max**	**Units**
$1/T_{CLCL}$	Oscillator Frequency					0	40	MHz
T_{LHLL}	ALE Pulse Width	65		35		$2T_{CLCL}$ - 15		ns
T_{AVLL}	Address Valid to ALE Low	15				T_{CLCL} - 25 (3V)		ns
				10		T_{CLCL} - 15 (5V)		ns
T_{LLAX}	Address Hold After ALE Low	15				T_{CLCL} - 25 (3V)		ns
				10		T_{CLCL} - 15 (5V)		ns
T_{LLIV}	ALE Low to Valid Instr In		95				$4T_{CLCL}$ - 65 (3V)	ns
					55		$4T_{CLCL}$ - 45 (5V)	ns
T_{LLPL}	ALE Low to PSEN# Low	15				T_{CLCL} - 25 (3V)		ns
				10		T_{CLCL} - 15 (5V)		ns
T_{PLPH}	PSEN# Pulse Width	95				$3T_{CLCL}$ - 25 (3V)		ns
				60		$3T_{CLCL}$ - 15 (5V)		
T_{PLIV}	PSEN# Low to Valid Instr In		65				$3T_{CLCL}$ - 55 (3V)	ns
					25		$3T_{CLCL}$ - 50 (5V)	ns
T_{PXIX}	Input Instr Hold After PSEN#					0		ns
T_{PXIZ}	Input Instr Float After PSEN#		35				T_{CLCL} - 5 (3V)	ns
					10		T_{CLCL} - 15 (5V)	ns
T_{AVIV}	Address to Valid Instr In		120				$5T_{CLCL}$ - 80 (3V)	ns
					65		$5T_{CLCL}$ - 60 (5V)	ns
T_{PLAZ}	PSEN# Low to Address Float		10		10		10	ns
T_{RLRH}	RD# Pulse Width	200				$6T_{CLCL}$ - 40 (3V)		ns
				120		$6T_{CLCL}$ - 30 (5V)		
T_{WLWH}	Write Pulse Width (WE#)	200				$6T_{CLCL}$ - 40 (3V)		ns
				120		$6T_{CLCL}$ - 30 (5V)		
T_{RLDV}	RD# Low to Valid Data In		110				$5T_{CLCL}$ - 90 (3V)	ns
					75		$5T_{CLCL}$ - 50 (5V)	ns
T_{RHDX}	Data Hold After RD#	0		0		0		ns
T_{RHDZ}	Data Float After RD#		55				$2T_{CLCL}$ - 25 (3V)	ns
					38		$2T_{CLCL}$ - 12 (5V)	ns
T_{LLDV}	ALE Low to Valid Data In		230				$8T_{CLCL}$ - 90 (3V)	ns
					150		$8T_{CLCL}$ - 50 (5V)	ns
T_{AVDV}	Address to Valid Data In		270				$9T_{CLCL}$ - 90 (3V)	ns
					150		$9T_{CLCL}$ - 75 (5V)	ns
T_{LLWL}	ALE Low to RD# or WR# Low	95	145			$3T_{CLCL}$ - 25 (3V)	$3T_{CLCL}$ + 25 (3V)	ns
				60	90	$3T_{CLCL}$ - 15 (5V)	$3T_{CLCL}$ + 15 (5V)	
T_{AVWL}	Address to RD# or WR# Low	85				$4T_{CLCL}$ - 75 (3V)		ns
				70		$4T_{CLCL}$ - 30 (5V)		ns
T_{QVWX}	Data Valid to WR# High to Low Transition		0		0		0	ns
T_{WHQX}	Data Hold After WR#	13				T_{CLCL} - 27 (3V)		ns
				5		T_{CLCL} - 20 (5V)		ns

TABLE 11-5: AC ELECTRICAL CHARACTERISTICS (CONTINUED) (2 OF 2)
T_{amb} = 0°C TO +70°C OR -40°C TO +85°C, V_{DD} = 2.7-3.6V @25MHZ, 4.5-5.5V @ 40MHZ, V_{SS} = 0

Symbol	Parameter	Oscillator						Units
		25MHz		40MHz		Variable		
		Min	Max	Min	Max	Min	Max	
T_{QVWH}	Data Valid to WR# High	433				$7T_{CLCL}$ - 70 (3V)		ns
				125		$7T_{CLCL}$ - 50 (5V)		ns
T_{RLAZ}	RD# Low to Address Float		0		0		0	ns
T_{WHLH}	RD# to WR# High to ALE High	43	123			T_{CLCL} - 25 (3V)	T_{CLCL} + 25 (3V)	ns
				10	40	T_{CLCL} - 15 (5V)	T_{CLCL} + 15 (5V)	ns

T11-5.0 555

11.5 AC Characteristics

Explanation of Symbols Each timing symbol has 5 characters. The first character is always a 'T' (stands for time). The other characters, depending on their positions, stand for the name of a signal or the logical status of that signal. The following is a list of all the characters and what they stand for.

A: Address
C: Clock
D: Input data
H: Logic level HIGH
I: Instruction (program memory contents)
L: Logic level LOW or ALE
P: PSEN#
Q: Output data
R: RD# signal
T: Time
V: Valid
W: WR# signal
X: No longer a valid logic level
Z: High Impedance (Float)

For example:

T_{AVLL} = Time from Address Valid to ALE Low

T_{LLPL} = Time from ALE Low to PSEN# Low

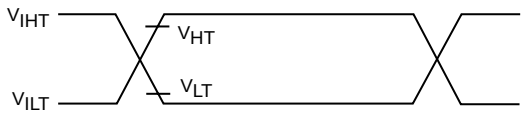

555 ILL F26a.0

AC Inputs during testing are driven at V_{IHT} (V_{DD} -0.5V) for Logic "1" and V_{ILT} (0.45V) for a Logic "0". Measurement reference points for inputs and outputs are at V_{HT} (0.2V_{DD} + 0.9) and V_{LT} (0.2V_{DD} - 0.1)

Note: V_{HT}- V_{HIGH} Test
V_{LT}- V_{LOW} Test
V_{IHT}-V_{INPUT} HIGH Test
V_{ILT}- V_{INPUT} LOW Test

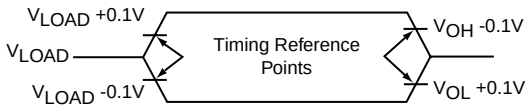

555 ILL F26b.0

For timing purposes a port pin is no longer floating when a 100 mV change from load voltage occurs, and begins to float when a 100 mV change from the loaded V_{OH}/V_{OL} level occurs. I_{OL}/I_{OH} = ± 20mA.

FIGURE 11-5: AC TESTING INPUT/OUTPUT, FLOAT WAVEFORM

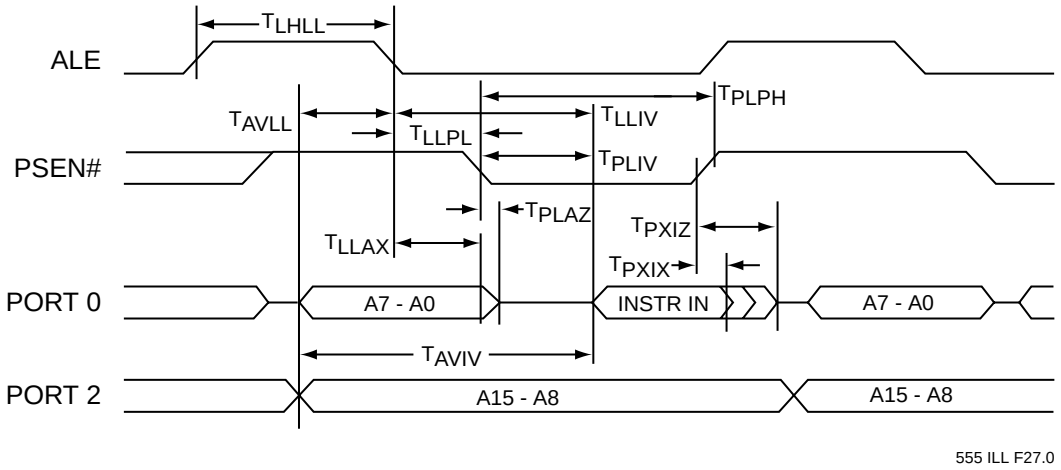

FIGURE 11-6: EXTERNAL PROGRAM MEMORY READ CYCLE

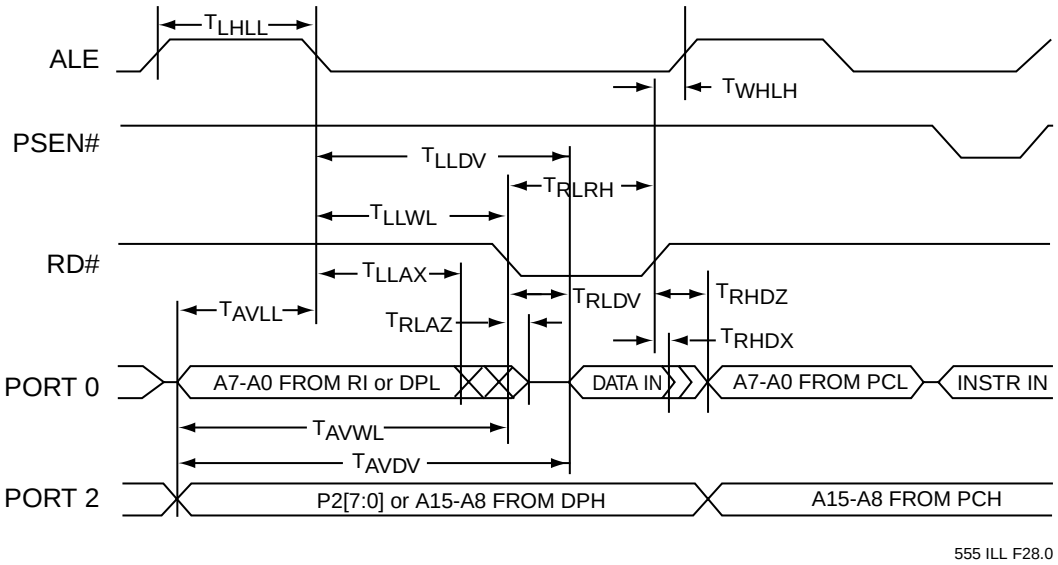

FIGURE 11-7: EXTERNAL DATA MEMORY READ CYCLE

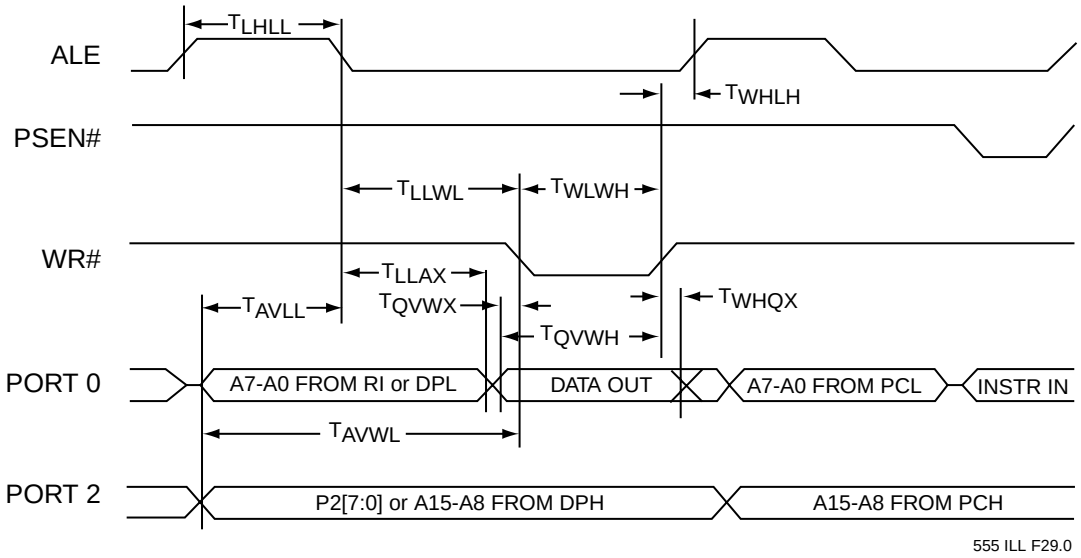

FIGURE 11-8: EXTERNAL DATA MEMORY WRITE CYCLE

TABLE 11-6: EXTERNAL CLOCK DRIVE

		Oscillator						
		25MHz		40MHz		Variable		
Symbol	**Parameter**	**Min**	**Max**	**Min**	**Max**	**Min**	**Max**	**Units**
$1/T_{CLCL}$	Oscillator Frequency					0	40	MHz
T_{CHCX}	High Time					$0.35T_{CLCL}$	$0.65T_{CLCL}$	ns
T_{CLCX}	Low Time					$0.35T_{CLCL}$	$0.65T_{CLCL}$	ns
T_{CLCH}	Rise Time		20		10			ns
T_{CHCL}	Fall Time		20		10			ns

T11-6.0 555

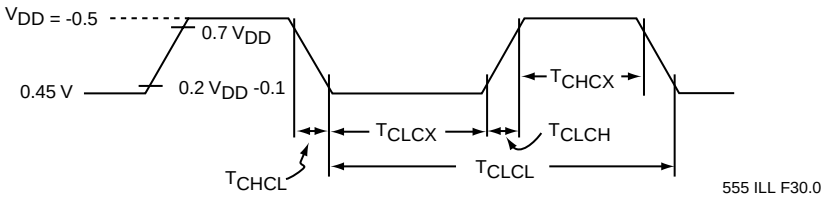

FIGURE 11-9: EXTERNAL CLOCK DRIVE WAVEFORM

TABLE 11-7: SERIAL PORT TIMING

Symbol	Parameter	Oscillator						Units
		25MHz		40MHz		Variable		
		Min	Max	Min	Max	Min	Max	
T_{XLXL}	Serial Port Clock Cycle Time	0		0.36		$12T_{CLCL}$		ms
T_{QVXH}	Output Data Setup to Clock Rising Edge	700		117		$10T_{CLCL}$ - 133		ns
T_{XHQX}	Output Data Hold After Clock Rising Edge	50				$2T_{CLCL}$ - 117		ns
				0		$2T_{CLCL}$ - 50		ns
T_{XHDX}	Input Data Hold After Clock Rising Edge	0		0		0		ns
T_{XHDV}	Clock Rising Edge to Input Data Valid		700		117		$10T_{CLCL}$ - 133	ns

T11-7.0 555

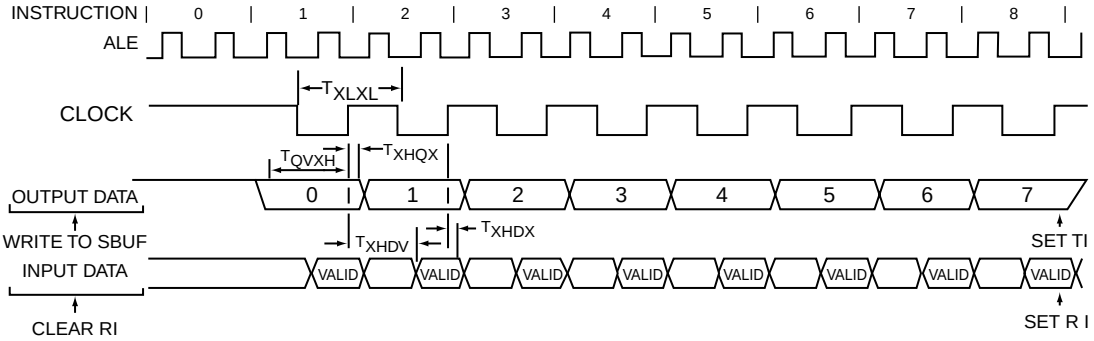

555 ILL F31.0

FIGURE 11-10: SHIFT REGISTER MODE TIMING WAVEFORMS

12.0 PRODUCT ORDERING INFORMATION

Device		Speed		Suffix1		Suffix2
SST89x5x4xx	-	XX	-	X	-	X X

Package Modifier
I = 40 pins
J = 44 pins

Package Type
P = PDIP
N = PLCC
TQ = TQFP

Operation Temperature
C = Commercial = 0°C to +70°C
I = Industrial = -40°C to +85°C

Operating Frequency
25 = 0-25MHz
40 = 0-40MHz

Feature Set and Flash Memory Size
564RD = C52 feature set + 64(72)* KByte
554RC = C52 feature set + 32(40)* KByte
* = 8K additional flash can be enabled

Voltage Range
E = 4.5-5.5V
V = 2.7-3.6V

Device Family
89 = C51 Core

12.1 Valid Combinations

Valid combinations for SST89E564RD

SST89E564RD-40-C-PI	SST89E564RD-40-C-NJ	SST89E564RD-40-C-TQJ
SST89E564RD-40-I-PI	SST89E564RD-40-I-NJ	SST89E564RD-40-I-TQJ

Valid combinations for SST89V564RD

SST89V564RD-25-C-PI	SST89V564RD-25-C-NJ	SST89V564RD-25-C-TQJ
SST89V564RD-25-I-PI	SST89V564RD-25-I-NJ	SST89V564RD-25-I-TQJ

Valid combinations for SST89E554RC

SST89E554RC-40-C-PI	SST89E554RC-40-C-NJ	SST89E554RC-40-C-TQJ
SST89E554RC-40-I-PI	SST89E554RC-40-I-NJ	SST89E554RC-40-I-TQJ

Valid combinations for SST89V554RC

SST89V554RC-25-C-PI	SST89V554RC-25-C-NJ	SST89V554RC-25-C-TQJ
SST89V554RC-25-I-PI	SST89V554RC-25-I-NJ	SST89V554RC-25-I-TQJ

Note: Valid combinations are those products in mass production or will be in mass production.
Consult your SST sales representative to confirm availability of valid combinations and to determine availability of new combinations.

13.0 PACKAGING DIAGRAMS

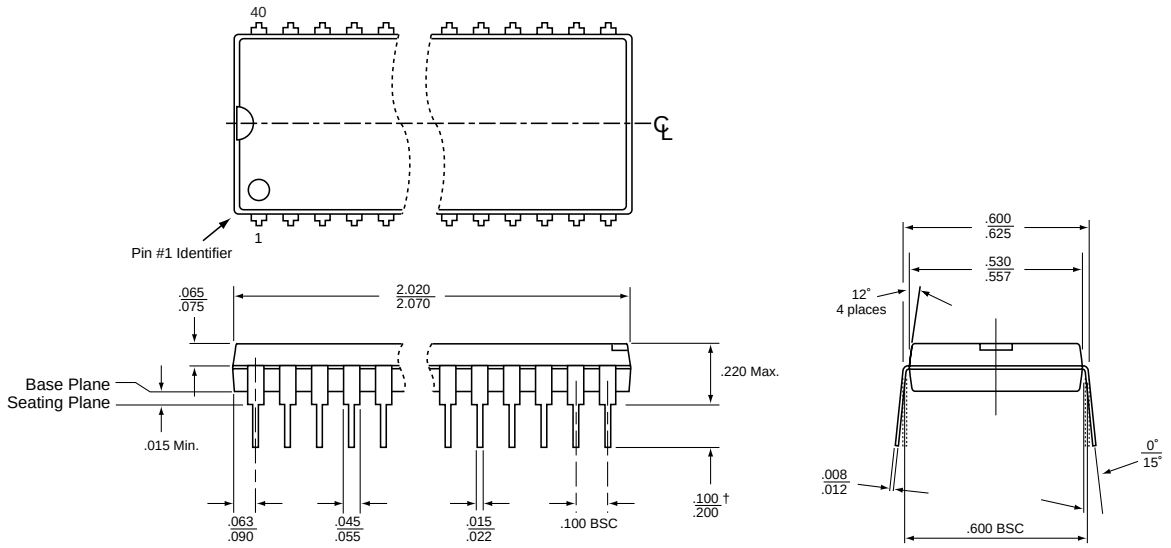

Note: 1. Complies with JEDEC publication 95 MS-011 AC dimensions (except as noted), although some dimensions may be more stringent.
† = JEDEC min is .115; SST min is *less* stringent
2. All linear dimensions are in inches (min/max).
3. Dimensions do not include mold flash. Maximum allowable mold flash is .010 inches.

40.pdipPI-ILL.7

40-PIN PLASTIC DUAL IN-LINE PINS (PDIP)
SST PACKAGE CODE: PI

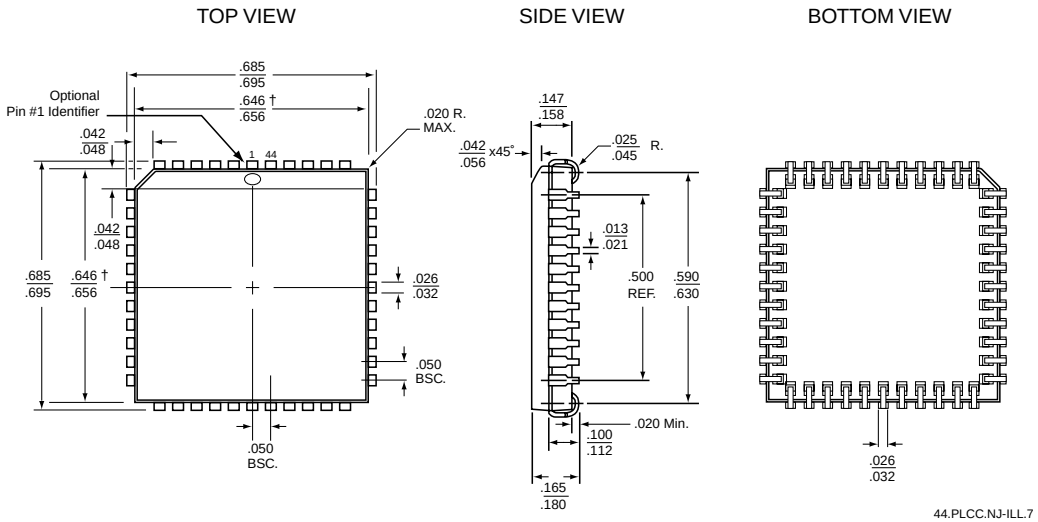

44.PLCC.NJ-ILL.7

Note: 1. Complies with JEDEC publication 95 MS-018 AC dimensions (except as noted), although some dimensions may be more stringent.
† = JEDEC min is .650; SST min is *less* stringent
2. All linear dimensions are in inches (min/max).
3. Dimensions do not include mold flash. Maximum allowable mold flash is .008 inches.
4. Coplanarity: 4 mils.

44-LEAD PLASTIC LEAD CHIP CARRIER (PLCC)
SST PACKAGE CODE: NJ

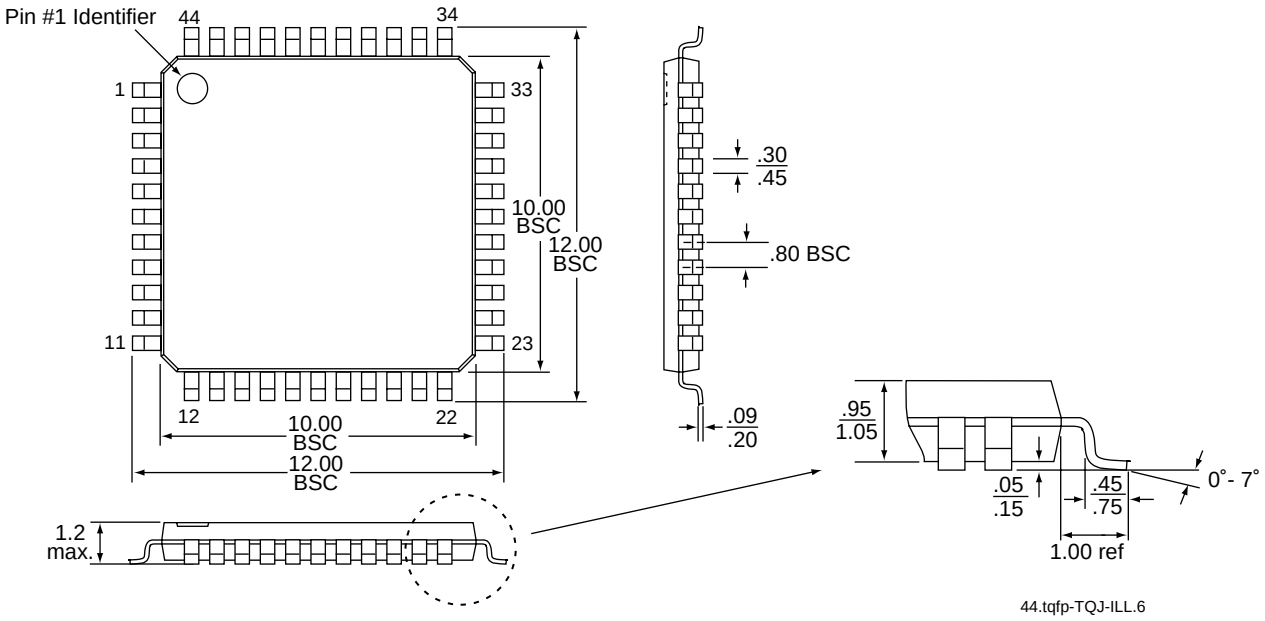

Note:
1. Complies with JEDEC publication 95 MS-026 ACB dimensions, although some dimensions may be more stringent.
2. All linear dimensions are in millimeters (min/max).
3. Coplanarity: 0.1 (±0.05) mm.
4. Package body dimensions do not include mold flash. Maximum allowable mold flash is .25mm.

44-LEAD THIN QUAD FLAT PACK (TQFP)
SST PACKAGE CODE: TQJ