查询GAL6002供应商

Lattice Semiconductor Corporation

GAL6002

High Performance E²CMOS FPLA Generic Array Logic™

Features

- **HIGH PERFORMANCE E²CMOS® TECHNOLOGY**
  - **— 15ns Maximum Propagation Delay**
  - **— 75MHz Maximum Frequency**
  - **— 6.5ns Maximum Clock to Output Delay**
  - **— TTL Compatible 16mA Outputs**
  - **— UltraMOS® Advanced CMOS Technology**
- **ACTIVE PULL-UPS ON ALL PINS**
- **LOW POWER CMOS**
  - **— 90mA Typical Icc**
- **E² CELL TECHNOLOGY**
  - **— Reconfigurable Logic**
  - **— Reprogrammable Cells**
  - **— 100% Tested/100% Yields**
  - **— High Speed Electrical Erasure (<100ms)**
  - **— 20 Year Data Retention**
- **UNPRECEDENTED FUNCTIONAL DENSITY**
  - **— 78 x 64 x 36 FPLA Architecture**
  - **— 10 Output Logic Macrocells**
  - **— 8 Buried Logic Macrocells**
  - **— 20 Input and I/O Logic Macrocells**
- **HIGH-LEVEL DESIGN FLEXIBILITY**
  - **— Asynchronous or Synchronous Clocking**
  - **— Separate State Register and Input Clock Pins**
  - **— Functional Superset of Existing 24-pin PAL® and FPLA Devices**
- **APPLICATIONS INCLUDE:**
  - **— Sequencers**
  - **— State Machine Control**
  - **— Multiple PLD Device Integration**

Description

Having an FPLA architecture, the GAL6002 provides superior flexibility in state-machine design. The GAL6002 offers the highest degree of functional integration, flexibility, and speed currently available in a 24-pin, 300-mil package. E²CMOS technology offers high speed (<100ms) erase times, providing the ability to reprogram or reconfigure the device quickly and efficiently.

The GAL6002 has 10 programmable Output Logic Macrocells (OLMC) and 8 programmable Buried Logic Macrocells (BLMC). In addition, there are 10 Input Logic Macrocells (ILMC) and 10 I/O Logic Macrocells (IOLMC). Two clock inputs are provided for independent control of the input and output macrocells.

Unique test circuitry and reprogrammable cells allow complete AC, DC, and functional testing during manufacturing. As a result, Lattice Semiconductor delivers 100% field programmability and functionality of all GAL products. In addition, 100 erase/write cycles and data retention in excess of 20 years are specified.

Functional Block Diagram

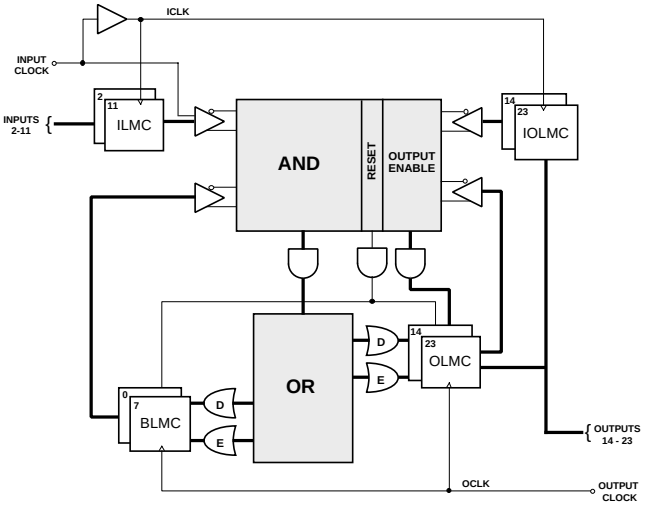

Macrocell Names

ILMC	INPUT LOGIC MACROCELL
IOLMC	I/O LOGIC MACROCELL
BLMC	BURIED LOGIC MACROCELL
OLMC	OUTPUT LOGIC MACROCELL

PinNames

I_0 - I_{10}	INPUT	I/O/Q	BIDIRECTIONAL
ICLK	INPUT CLOCK	V_{CC}	POWER (+5V)
OCLK	OUTPUT CLOCK	GND	GROUND

Pin Configuration

PLCC

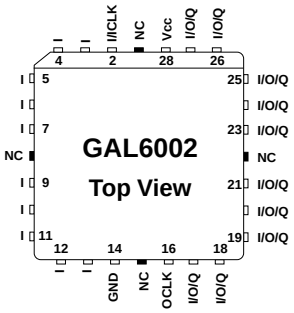

DIP

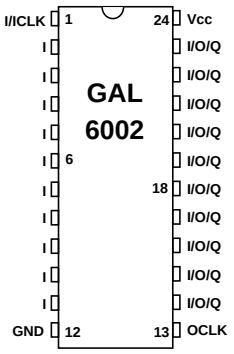

Copyright © 1997 Lattice Semiconductor Corp. All brand or product names are trademarks or registered trademarks of their respective holders. The specifications and information herein are subject to change without notice.

LATTICE SEMICONDUCTOR CORP., 5555 Northeast Moore Ct., Hillsboro, Oregon 97124, U.S.A.
Tel. (503) 268-8000; 1-800-LATTICE; FAX (503) 268-8556; http://www.latticesemi.com

July 1997

GAL6002 Commercial Device Ordering Information

Commercial Grade Specifications

Tpd (ns)	Fmax (MHz)	Icc (mA)	Ordering #	Package
15	75	135	GAL6002B-15LP	24-Pin Plastic DIP
		135	GAL6002B-15LJ	28-Lead PLCC
20	60	135	GAL6002B-20LP	24-Pin Plastic DIP
		135	GAL6002B-20LJ	28-Lead PLCC

Part Number Description

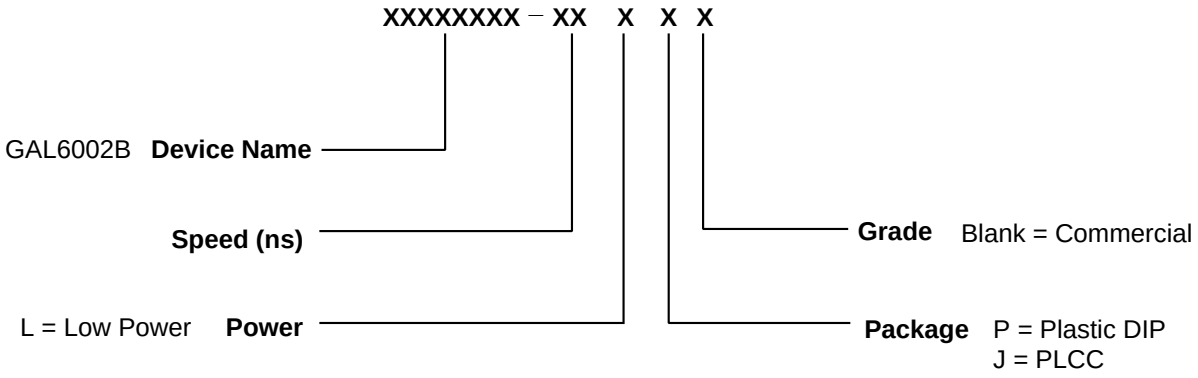

Input Logic Macrocell (ILMC) and I/O Logic Macrocell (IOLMC)

The GAL6002 features two configurable input sections. The ILMC section corresponds to the dedicated input pins (2-11) and the IOLMC to the I/O pins (14-23). Each input section is individually configurable as asynchronous, latched, or registered inputs. Pin 1 (ICLK) is used as an enable input for latched macrocells or as a clock input for registered macrocells. Individually configurable inputs provide system designers with unparalleled design flexibility. With the GAL6002, external input registers and latches are not necessary.

Both the ILMC and the IOLMC are individually configurable and the ILMC can be configured independently of the IOLMC. The three valid macrocell configurations and its associated fuse numbers are shown in the diagrams on the following pages. Note that these programmable cells are configured by the logic compiler software. The user does not need to manually manipulate these architecture bits.

Output Logic Macrocell (OLMC) and Buried Logic Macrocell (BLMC)

The outputs of the OR array feed two groups of macrocells. One group of eight macrocells is buried; its outputs feed back directly into the AND array rather than to device pins. These cells are called the Buried Logic Macrocells (BLMC), and are useful for building state machines. The second group of macrocells consists of 10 cells whose outputs, in addition to feeding back into the AND array, are available at the device pins. Cells in this group are known as Output Logic Macrocells (OLMC).

The Output and Buried Logic Macrocells are configurable on a macrocell by macrocell basis. Buried and Output Logic Macrocells may be set to one of three configurations: combinational, D-type register with sum term (asynchronous) clock, or D/E-type register. Output macrocells always have I/O capability, with directional control provided by the 10 output enable (OE) product terms. Additionally, the polarity of each OLMC output is selected through the programmable polarity control cell called XORD. Polarity selection for BLMCs is selected through the true and complement forms of their feedbacks to the AND array. Polarity of all E (Enable) sum terms is selected through the XORE programmable cells.

When the output or buried logic macrocell is configured as a D/E type register, the register is clocked from the common OCLK and the register clock enable input is controlled by the associated "E" sum term. This configuration is useful for building counters and state-machines with count hold and state hold functions.

When the macrocell is configured as a D type register with a sum term clock, the register is always enabled and the associated “E” sum term is routed directly to the clock input. This permits asynchronous programmable clocking, selected on a register-by-register basis.

Registers in both the Output and Buried Logic Macrocells feature a common RESET product term. This active high product term allows the registers to be asynchronously reset. All registers reset to logic zero. With the inverting output buffers, the output pins will reset to logic one.

There are two possible feedback paths from each OLMC. The first path is directly from the OLMC (this feedback is before the output buffer). When the OLMC is used as an output, the second feedback path is through the IOLMC. With this dual feedback arrangement, the OLMC can be permanently buried without losing the use of the associated OLMC pin as an input, or dynamically buried with the use of the output enable product term.

The D/E registers used in this device offer the designer the ultimate in flexibility and utility. The D/E register architecture can emulate RS, JK, and T registers with the same efficiency as a dedicated RS, JK, or T registers.

The three macrocell configurations are shown in the diagrams on the following pages. These programmable cells are also configured by the logic compiler software. The user does not need to manually manipulate these architecture bits.

ILMC and IOLMC Configurations

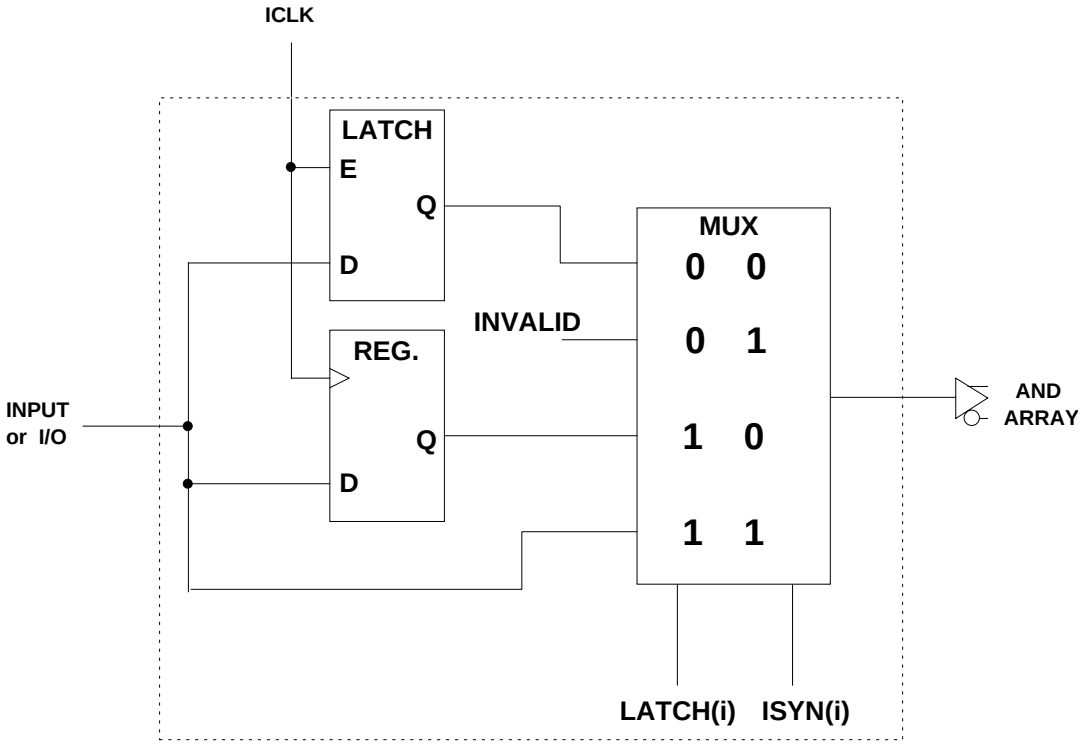

ILMC/IOLMC

Generic Logic Block Diagram

Input Macrocell JEDEC Fuse Numbers

INSYNC	INLATCH	ILMC
8218	8219	0
8220	8221	1
8222	8223	2
8224	8225	3
8226	8227	4
8228	8229	5
8230	8231	6
8232	8233	7
8234	8235	8
8236	8237	9

I/O Macrocell JEDEC Fuse Numbers

IOSYNC	IOLATCH	IOLMC
8238	8239	9
8240	8241	8
8242	8243	7
8244	8245	6
8246	8247	5
8248	8249	4
8250	8251	3
8252	8253	2
8254	8255	1
8256	8257	0

OLMC and BLMC Configurations

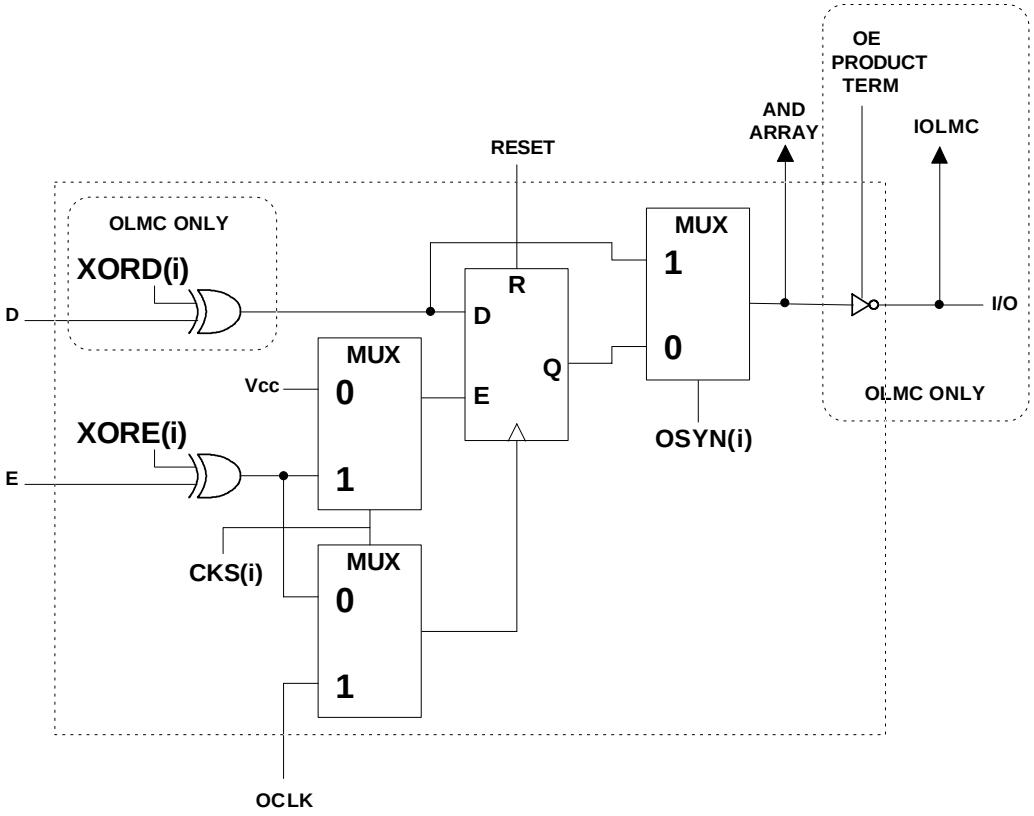

OLMC/BLMC

Generic Logic Block Diagram

OLMC JEDEC Fuse Numbers

OLMC	CKS	OUTSYNC	XORE	XORD
0	8178	8179	8180	8181
1	8182	8183	8184	8185
2	8186	8187	8188	8189
3	8190	8191	8192	8193
4	8194	8195	8196	8197
5	8198	8199	8200	8201
6	8202	8203	8204	8205
7	8206	8207	8208	8209
8	8210	8211	8212	8213
9	8214	8215	8216	8217

BLMC JEDEC Fuse Numbers

BLMC	CKS	OUTSYNC	XORE
7	8175	8176	8177
6	8172	8173	8174
5	8169	8170	8171
4	8166	8167	8168
3	8163	8164	8165
2	8160	8161	8162
1	8157	8158	8159
0	8154	8155	8156

Logic Diagram

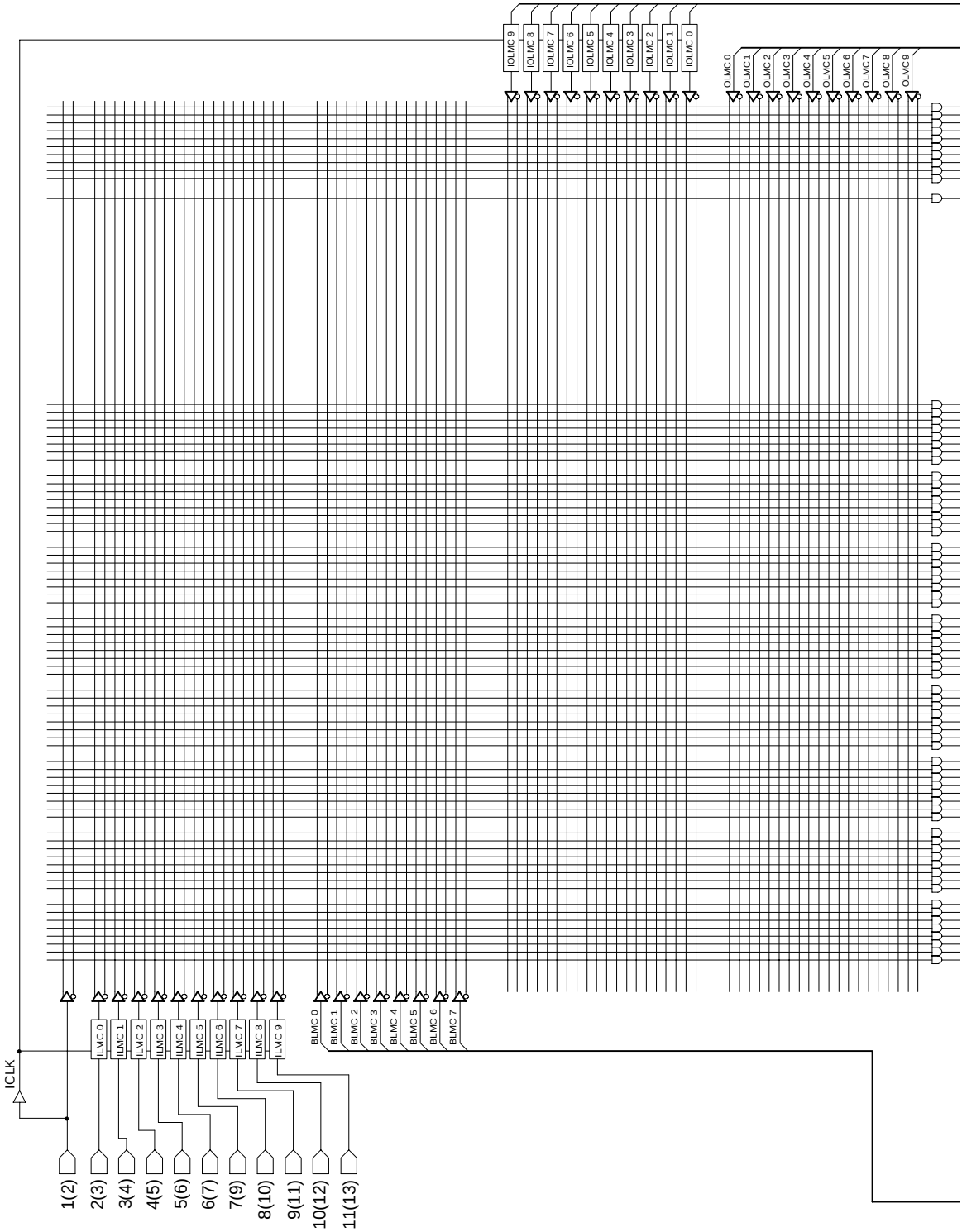

Logic Diagram (Continued)

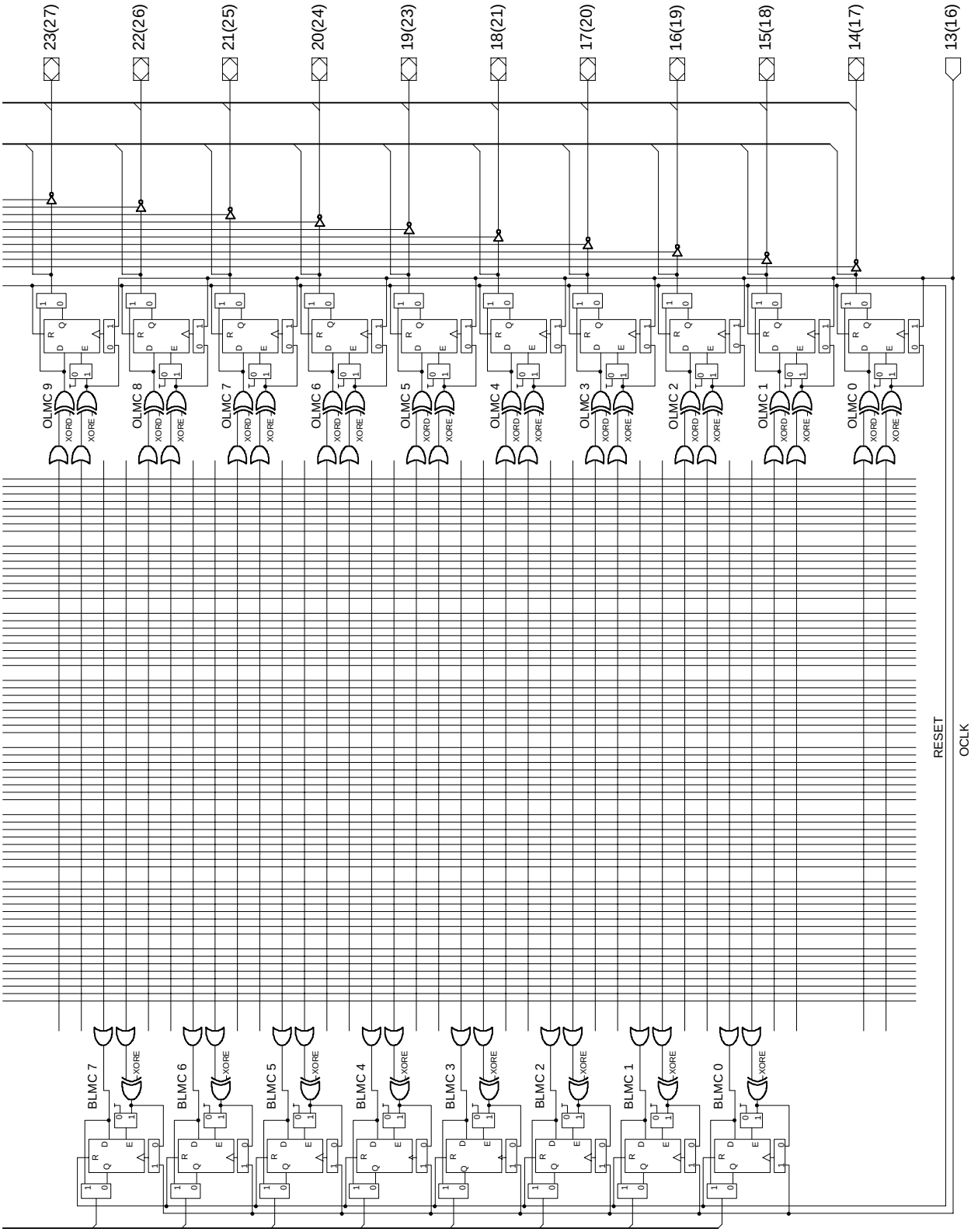

Absolute Maximum Ratings(1)

Supply voltage V_{CC} ..... –0.5 to +7V
Input voltage applied ..... –2.5 to V_{CC} +1.0V
Off-state output voltage applied ..... –2.5 to V_{CC} +1.0V
Storage Temperature ..... –65 to 150°C
Ambient Temperature with
Power Applied ..... –55 to 125°C

1. Stresses above those listed under the "Absolute Maximum Ratings" may cause permanent damage to the device. These are stress only ratings and functional operation of the device at these or at any other conditions above those indicated in the operational sections of this specification is not implied (while programming, follow the programming specifications).

Recommended Operating Conditions

Commercial Devices:
Ambient Temperature (T_A) ..... 0 to 75°C
Supply voltage (V_{CC})
with Respect to Ground ..... +4.75 to +5.25V

DC Electrical Characteristics

Over Recommended Operating Conditions (Unless Otherwise Specified)

SYMBOL	PARAMETER	CONDITION	MIN.	TYP.[3]	MAX.	UNITS
V_{IL}	Input Low Voltage		Vss – 0.5	—	0.8	V
V_{IH}	Input High Voltage		2.0	—	Vcc+1	V
I_{IL}[1]	Input or I/O Low Leakage Current	$0V \le V_{IN} \le V_{IL}$ (MAX.)	—	—	-100	µA
I_{IH}	Input or I/O High Leakage Current	$3.5V \le V_{IN} \le V_{CC}$	—	—	10	µA
V_{OL}	Output Low Voltage	I_{OL} = MAX. Vin = V_{IL} or V_{IH}	—	—	0.5	V
V_{OH}	Output High Voltage	I_{OH} = MAX. Vin = V_{IL} or V_{IH}	2.4	—	—	V
I_{OL}	Low Level Output Current		—	—	16	mA
I_{OH}	High Level Output Current		—	—	–3.2	mA
I_{OS}[2]	Output Short Circuit Current	V_{CC} = 5V V_{OUT} = 0.5V T_A = 25°C	–30	—	–130	mA

COMMERCIAL

I_{CC}	Operating Power Supply Current	V_{IL} = 0.5V V_{IH} = 3.0V f_{toggle} = 15MHz Outputs Open	L -15/-20	—	90	135	mA

1) The leakage current is due to the internal pull-up resistor on all pins. See **Input Buffer** section for more information.
2) One output at a time for a maximum duration of one second. Vout = 0.5V was selected to avoid test problems caused by tester ground degradation. Characterized but not 100% tested.
3) Typical values are at Vcc = 5V and T_A = 25 °C

Capacitance (TA = 25°C, f = 1.0 MHz)

SYMBOL	PARAMETER	MAXIMUM*	UNITS	TEST CONDITIONS
C_I	Input Capacitance	8	pF	V_{CC} = 5.0V, V_I = 2.0V
$C_{I/O}$	I/O Capacitance	8	pF	V_{CC} = 5.0V, $V_{I/O}$ = 2.0V

*Characterized but not 100% tested.

AC Switching Characteristics

Over Recommended Operating Conditions

PARAM.	TEST COND[1].	DESCRIPTION	COM -15 MIN.	COM -15 MAX.	COM -20 MIN.	COM -20 MAX.	UNITS
t_{pd1}	A	Combinatorial Input to Combinatorial Output	—	15	—	20	ns
t_{pd2}	A	Feedback or I/O to Combinational Output	—	15	—	20	ns
t_{pd3}	A	Transparent Latch Input to Combinatorial Output	—	18	—	23	ns
t_{co1}	A	Input Latch ICLK to Combinatorial Output Delay	—	20	—	25	ns
t_{co2}	A	Input Reg. ICLK to Combinatorial Output Delay	—	20	—	25	ns
t_{co3}	A	Output D/E Reg. OCLK to Output Delay	—	6.5	—	8	ns
t_{co4}	A	Output D Reg. Sum Term CLK to Output Delay	—	18	—	20	ns
t_{cf1}[2]	—	Output D/E Reg. OCLK to Buried Feedback Delay	—	3.6	—	7	ns
t_{cf2}[2]	—	Output D Reg. STCLK to Buried Feedback Delay	—	10.1	—	13	ns
t_{su1}	—	Setup Time, Input before Input Latch ICLK	1.5	—	2	—	ns
t_{su2}	—	Setup Time, Input before Input Reg. ICLK	1.5	—	2	—	ns
t_{su3}	—	Setup Time, Input or Fdbk before D/E Reg. OCLK	11.5	—	13	—	ns
t_{su4}	—	Setup Time, Input or Fdbk before D Reg. Sum Term CLK	5	—	7	—	ns
t_{su5}	—	Setup Time, Input Reg. ICLK before D/E Reg. OCLK	15	—	20	—	ns
t_{su6}	—	Setup Time, Input Reg. ICLK before D Reg. Sum Term CLK	7	—	9	—	ns
t_{h1}	—	Hold Time, Input after Input Latch ICLK	3	—	4	—	ns
t_{h2}	—	Hold Time, Input after Input Reg. ICLK	3	—	4	—	ns
t_{h3}	—	Hold Time, Input or Feedback after D/E Reg. OCLK	0	—	0	—	ns
t_{h4}	—	Hold Time, Input or Feedback after D Reg. Sum Term CLK	4	—	6	—	ns
f_{max1}[3]	—	Max. Clock Frequency w/External Feedback, $1/(t_{su3}+t_{co3})$	55.5	—	47.6	—	MHz
f_{max2}[3]	—	Max. Clock Frequency w/External Feedback, $1/(t_{su4}+t_{co4})$	43.4	—	37	—	MHz
f_{max3}[3]	—	Max. Clock Frequency w/Internal Feedback, $1/(t_{su3}+t_{cf1})$	66	—	50	—	MHz
f_{max4}[3]	—	Max. Clock Frequency w/Internal Feedback, $1/(t_{su4}+t_{cf2})$	66	—	50	—	MHz
f_{max5}[3]	—	Max. Clock Frequency w/No Feedback, OCLK	75	—	60	—	MHz
f_{max6}[3]	—	Max. Clock Frequency w/No Feedback, STCLK	70	—	60	—	MHz
t_{wh1}	—	ICLK Pulse Duration, High	6	—	7	—	ns
t_{wh2}	—	OCLK Pulse Duration, High	6	—	7	—	ns
t_{wh3}	—	STCLK Pulse Duration, High	7	—	8	—	ns

1) Refer to **Switching Test Conditions** section.
2) Calculated from fmax with internal feedback. Refer to **fmax Description** section.
3) Refer to **fmax Description** section.

AC Switching Characteristics (Continued)

Over Recommended Operating Conditions

PARAMETER	TEST COND[1].	DESCRIPTION	COM -15 MIN.	COM -15 MAX.	COM -20 MIN.	COM -20 MAX.	UNITS
t_{wl1}	—	ICLK Pulse Duration, Low	6	—	7	—	ns
t_{wl2}	—	OCLK Pulse Duration, Low	6	—	7	—	ns
t_{wl3}	—	STCLK Pulse Duration, Low	7	—	8	—	ns
t_{arw}	—	Reset Pulse Duration	12	—	15	—	ns
t_{en}	B	Input or I/O to Output Enabled	—	15	—	20	ns
t_{dis}	C	Input or I/O to Output Disabled	—	15	—	20	ns
t_{ar}	A	Input or I/O to Asynchronous Reg. Reset	—	16	—	20	ns
t_{arr1}	—	Asynchronous Reset to OCLK Recovery Time	11	—	14	—	ns
t_{arr2}	—	Asynchronous Reset to Sum Term CLK Recovery Time	4	—	6	—	ns

1) Refer to **Switching Test Conditions** section.

Switching Waveforms

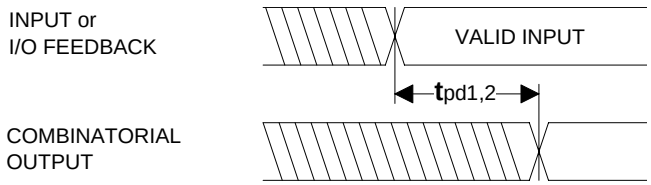

Combinatorial Output

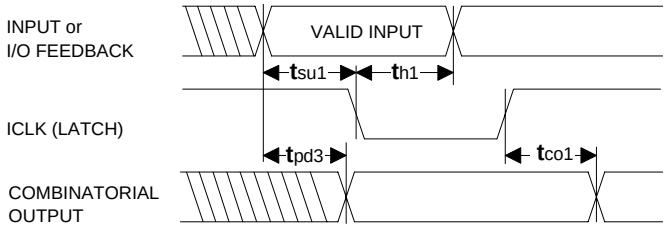

Latched Input

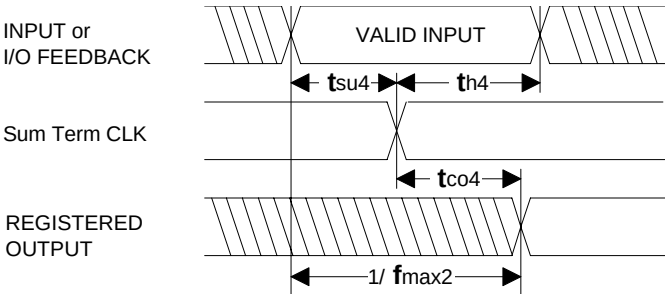

Registered Output (Sum Term CLK)

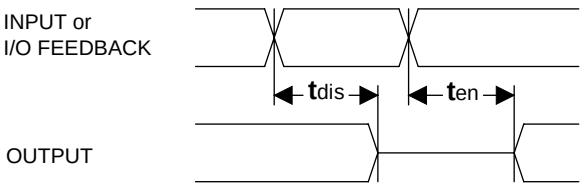

Input or I/O to Output Enable/Disable

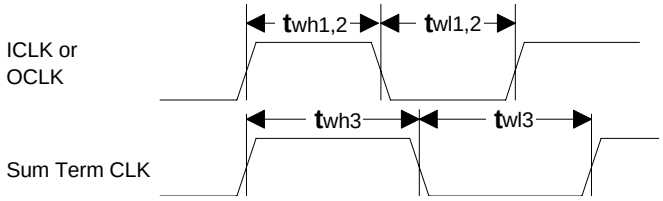

Clock Width

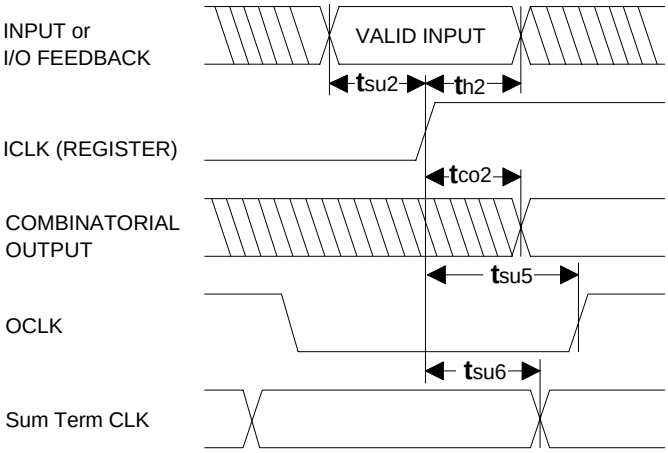

Registered Input

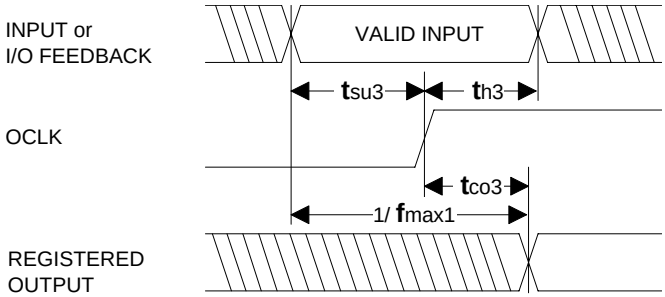

Registered Output (OCLK)

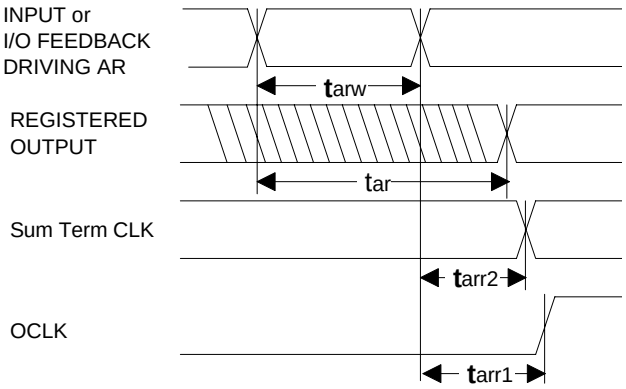

Asynchronous Reset

fmax Descriptions

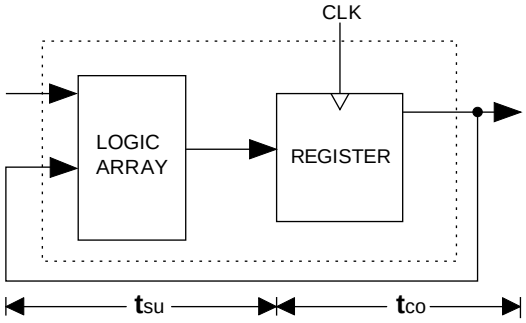

fmax with External Feedback 1/(tsu+tco)

Note: fmax with external feedback is calculated from measured tsu and tco.

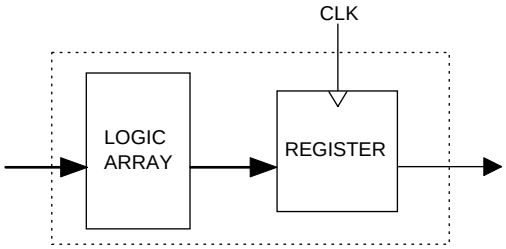

fmax with No Feedback

Note: fmax with no feedback may be less than 1/(twh + twl). This is to allow for a clock duty cycle of other than 50%.

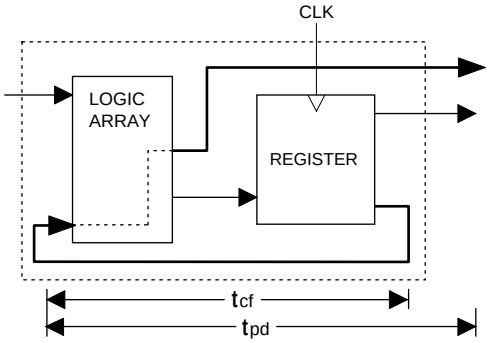

fmax with Internal Feedback 1/(tsu+tcf)

Note: tcf is a calculated value, derived by subtracting tsu from the period of fmax w/internal feedback (tcf = 1/fmax - tsu). The value of tcf is used primarily when calculating the delay from clocking a register to a combinatorial output (through registered feedback), as shown above. For example, the timing from clock to a combinatorial output is equal to tcf + tpd.

Switching Test Conditions

Input Pulse Levels	GND to 3.0V
Input Rise and Fall Times	3ns 10% – 90%
Input Timing Reference Levels	1.5V
Output Timing Reference Levels	1.5V
Output Load	See Figure

3-state levels are measured 0.5V from steady-state active level.

Output Load Conditions (see figure)

Test Condition		R_1	R_2	C_L
A		300Ω	390Ω	50pF
B	Active High	∞	390Ω	50pF
	Active Low	300Ω	390Ω	50pF
C	Active High	∞	390Ω	5pF
	Active Low	300Ω	390Ω	5pF

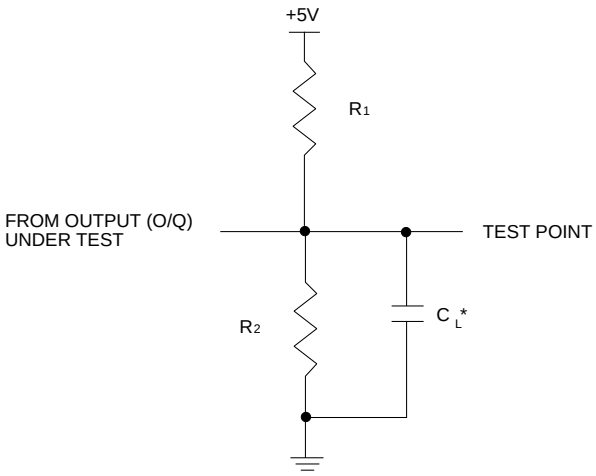

*C_L INCLUDES TEST FIXTURE AND PROBE CAPACITANCE

Array Description

The GAL6002 contains two E^2 reprogrammable arrays. The first is an AND array and the second is an OR array. These arrays are described in detail below.

AND ARRAY
The AND array is organized as 78 inputs by 75 product term outputs. The 10 ILMCs, 10 IOLMCs, 8 BLMC feedbacks, 10 OLMC feedbacks, and ICLK comprise the 39 inputs to this array (each available in true and complement forms). 64 product terms serve as inputs to the OR array. The RESET product term generates the RESET signal described in the Output and Buried Logic Macrocells section. There are 10 output enable product terms which allow device I/O pins to be bi-directional or tri-state.

OR ARRAY
The OR array is organized as 64 inputs by 36 sum term outputs. 64 product terms from the AND array serve as the inputs to the OR array. Of the 36 sum term outputs, 18 are data (“D”) terms and 18 are enable/clock (“E”) terms. These terms feed into the 10 OLMCs and 8 BLMCs, one “D” term and one “E” term to each.

The programmable OR array offers unparalleled versatility in product term usage. This programmability allows from 1 to 64 product terms to be connected to a single sum term. A programmable OR array is more flexible than a fixed, shared, or variable product term architecture.

Electronic Signature

An electronic signature is provided with every GAL6002 device. It contains 72 bits of reprogrammable memory that can contain user defined data. Some uses include user ID codes, revision numbers, or inventory control. The signature data is always available to the user independent of the state of the security cell.

NOTE: The electronic signature is included in checksum calculations. Changing the electronic signature will alter the checksum.

Security Cell

A security cell is provided with every GAL6002 device as a deterrent to unauthorized copying of the array patterns. Once programmed, this cell prevents further read access to the AND array. This cell can be erased only during a bulk erase cycle, so the original configuration can never be examined once this cell is programmed. The Electronic Signature is always available to the user, regardless of the state of this control cell.

Device Programming

GAL devices are programmed using a Lattice Semiconductor-approved Logic Programmer, available from a number of manufacturers. Complete programming of the device takes only a few seconds. Erasing of the device is transparent to the user, and is done automatically as part of the programming cycle.

Register Preload

When testing state machine designs, all possible states and state transitions must be verified, not just those required during normal operations. This is because certain events may occur during system operation that cause the logic to be in an illegal state (power-up, line voltage glitches, brown-out, etc.). To test a design for proper treatment of these conditions, a method must be provided to break the feedback paths and force any desired state (i.e., illegal) into the registers. Then the machine can be sequenced and the outputs tested for correct next state generation.

All of the registers in the GAL6002 can be preloaded, including the ILMC, IOLMC, OLMC, and BLMC registers. In addition, the contents of the state and output registers can be examined in a special diagnostics mode. Programming hardware takes care of all preload timing and voltage requirements.

Latch-Up Protection

GAL6002 devices are designed with an on-board charge pump to negatively bias the substrate. The negative bias is of sufficient magnitude to prevent input undershoots from causing the circuitry to latch. Additionally, outputs are designed with n-channel pull-ups instead of the traditional p-channel pull-ups to eliminate any possibility of SCR induced latching.

Input Buffers

GAL6002 devices are designed with TTL level compatible input buffers. These buffers have a characteristically high impedance, and present a much lighter load to the driving logic than bipolar TTL devices.

GAL6002 input buffers have active pull-ups within their input structure. This pull-up will cause any un-terminated input or I/O to float to a TTL high (logical 1). Lattice Semiconductor recommends that all unused inputs and tri-stated I/O pins be connected to another active input, Vcc, or GND. Doing this will tend to improve noise immunity and reduce Icc for the device.

Typical Input Pull-up Characteristic

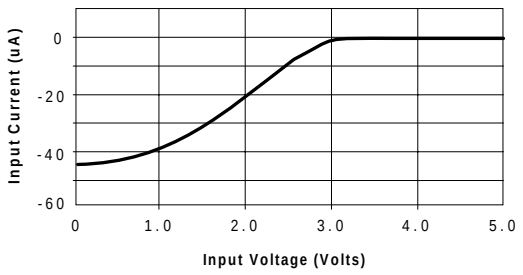

Power-Up Reset

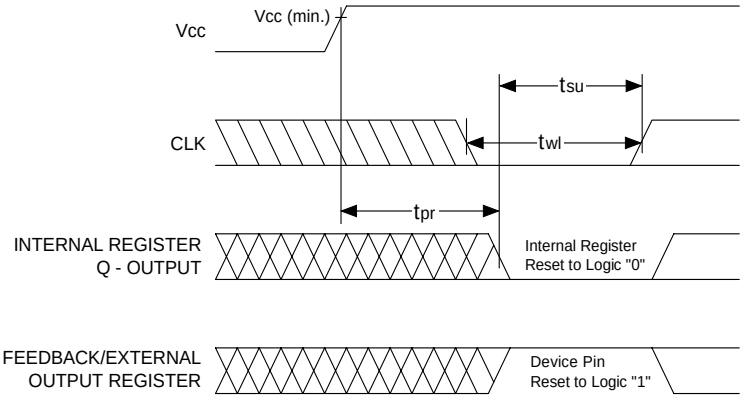

Circuitry within the GAL6002 provides a reset signal to all registers during power-up. All internal registers will have their Q outputs set low after a specified time (**t**pr, 1µs MAX). As a result, the state on the registered output pins (if they are enabled) will always be high on power-up, regardless of the programmed polarity of the output pins. This feature can greatly simplify state machine design by providing a known state on power-up. The timing diagram for power-up is shown below. Because of the asynchronous nature of system power-up, some conditions must be met to provide a valid power-up reset of the GAL6002. First, the **V**CC rise must be monotonic. Second, the clock input must be at static TTL level as shown in the diagram during power up. The registers will reset within a maximum of **t**pr time. As in normal system operation, avoid clocking the device until all input and feedback path setup times have been met. The clock must also meet the minimum pulse width requirements.

Differential Product Term Switching (DPTS) Applications

The number of Differential Product Term Switching (DPTS) for a given design is calculated by subtracting the total number of product terms that are switching from a Logical HI to a Logical LO from those switching from a Logical LO to a Logical HI within a 5ns period. After subtracting take the absolute value.

$$DPTS = \left| (P\text{-}Terms)_{LH} - (P\text{-}Terms)_{HL} \right|$$

DPTS restricts the number of product terms that can be switched simultaneously - there is no limit on the number of product terms that can be used.

The majority of designs fall below 15 DPTS, with the upper limit being approximately 25 DPTS. Lattice Semiconductor guarantees and tests the commercial grade GAL6002 for functionality at DPTS ≤30.

A software utility is available from Lattice Semiconductor Applications Engineering that will perform this calculation on any GAL6002 JEDEC file. This program, DPTS, and additional information may be obtained from your local Lattice Semiconductor representative or by contacting Lattice Semiconductor Applications Engineering Dept. (Tel: 503-681-0118 or 1-888-ISP-PLDS; FAX: 681-3037).

Typical AC and DC Characteristic Diagrams

Normalized Tpd vs Vcc

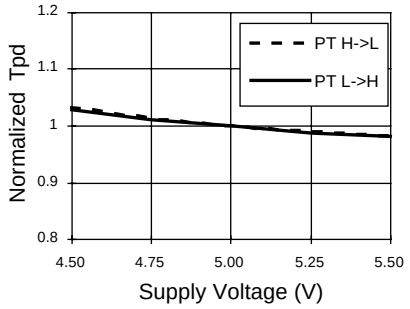

Normalized Tco vs Vcc

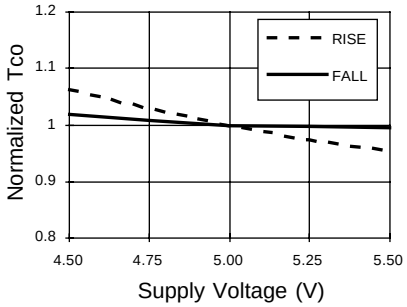

Normalized Tsu vs Vcc

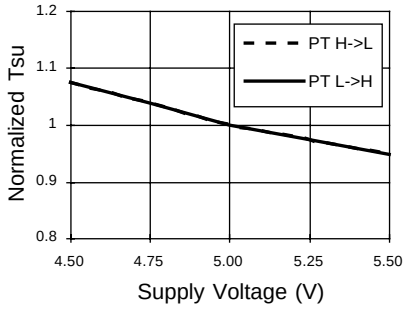

Normalized Tpd vs Temp

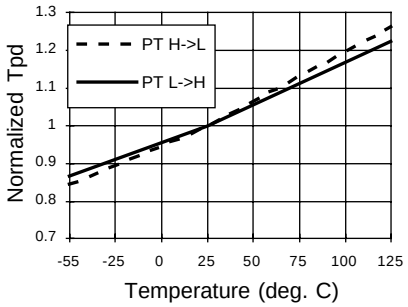

Normalized Tco vs Temp

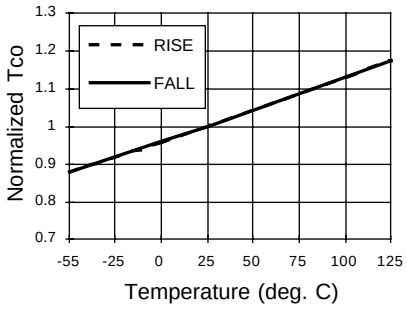

Normalized Tsu vs Temp

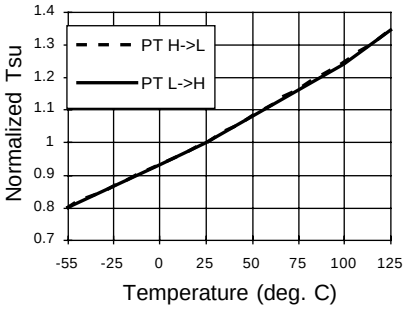

Delta Tpd vs # of Outputs Switching

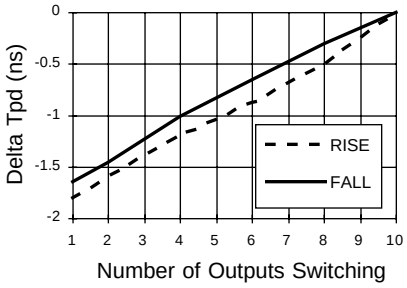

Delta Tco vs # of Outputs Switching

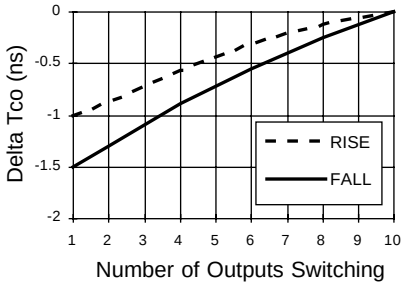

Delta Tpd vs Output Loading

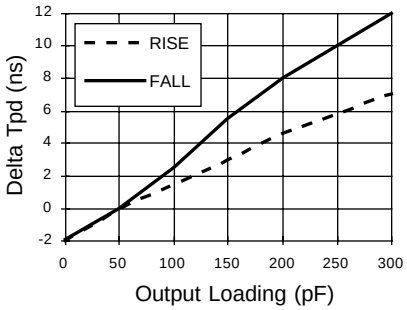

Delta Tco vs Output Loading

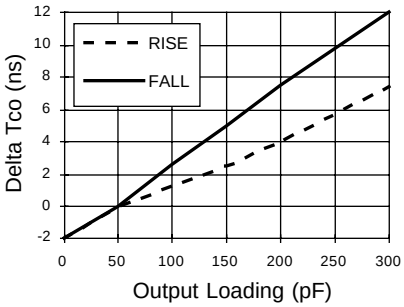

Typical AC and DC Characteristic Diagrams

Vol vs Iol

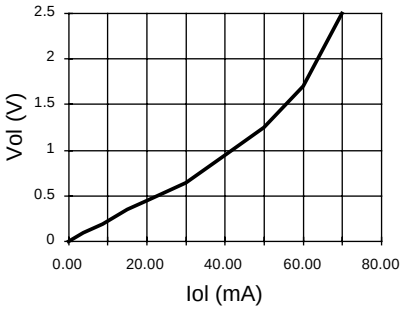

Voh vs Ioh

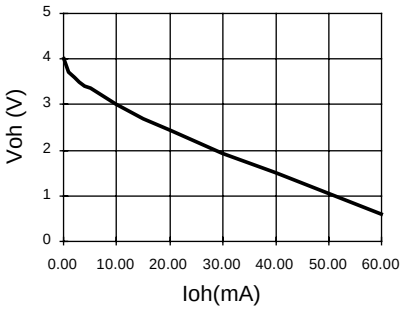

Voh vs Ioh

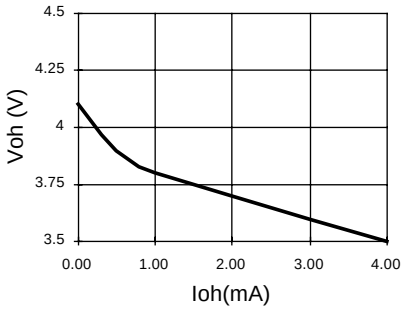

Normalized Icc vs Vcc

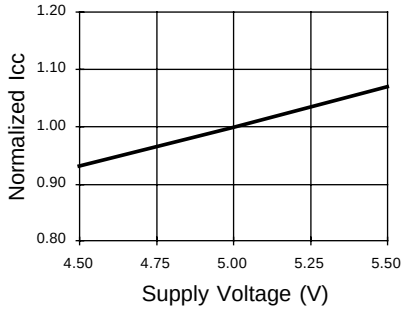

Normalized Icc vs Temp

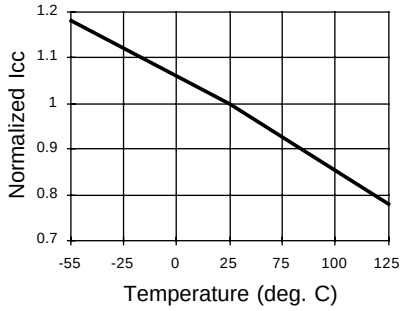

Normalized Icc vs Freq.

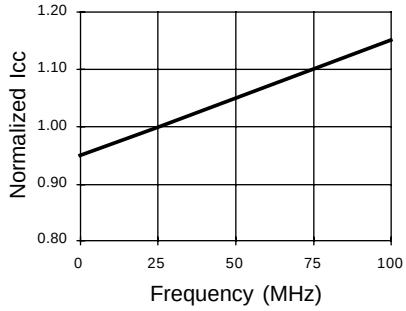

Delta Icc vs Vin (1 input)

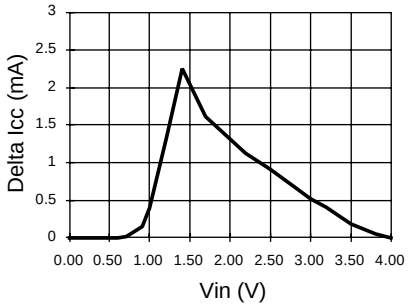
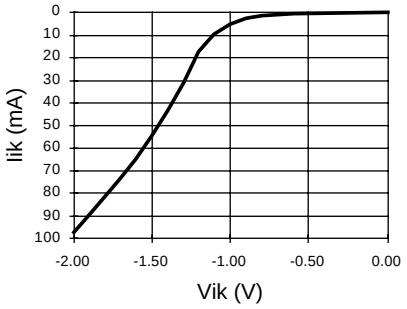
Input Clamp (Vik)