查询HV275A供应商 捷多邦，专业PCB打样工厂，24小时加急出货

Littelfuse®

Gas Discharge Tubes

High Performance Beta Range

RoHS Greentube™ HV Series Gas Plasma Arresters

The HV Series is a 2-terminal bi-directional, voltage triggered switch designed for the protection of high voltage circuits. Switching voltages for the devices are fixed depending on the part number selected. The gas plasma trigger technology offers very fast switching speeds, high current capability and very low leakage currents.

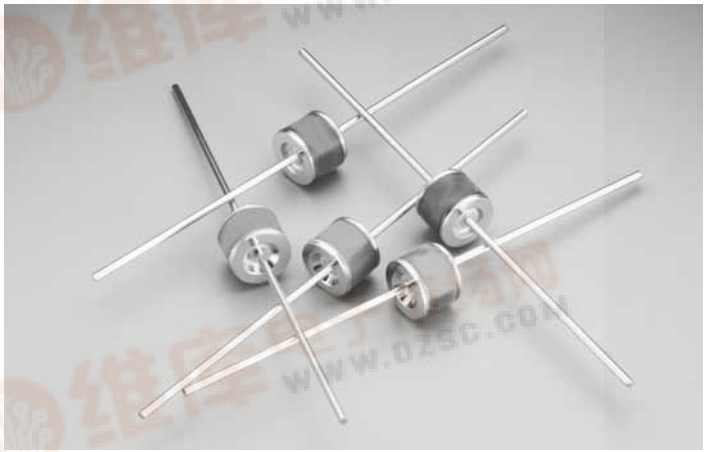

Features

- 2 terminal configuration.
- Very high Isolation up to the specified switching voltage.
- Switching performance is virtually unaffected by changes in ambient temperature.
- UL 1414 class Y2 rated. Listed under file number E56529.
- Moisture resistance as per MIL-STD-202 method 106 (90-98%RH, 65˚C)

Tape and reel to EIA 481-1

Applications

- To protect of high voltage circuits.
- To provide isolation between chassis and ground.

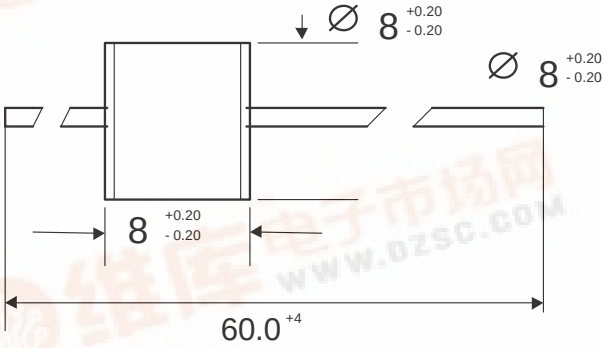

HV XXX A

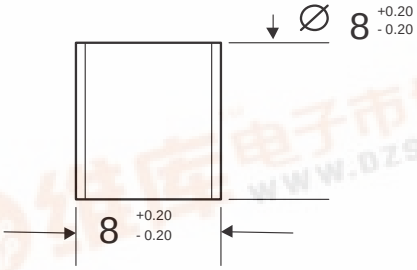

HV XXX C

ORDERING INFORMATION

HV 275 ☐

Voltage (x10)

Lead Form

A= Axial lead, tape & reel
C= Core

Mechanical Specifications:

Weight:	1.42g (0.049oz.)
Materials:	Electrode Base: Copper alloy Electrode Plating material: Bright Sn Body: Ceramic
Device Marking:	Littelfuse 'LF' marking, voltage and product code

找PDF 维库一下 pdf.dzsc.com

RoHS Greentube™ HV Series Gas Plasma Arresters

Device Ratings and Specifications

DC Breakover Voltage (V_{BO}) (1)	2500 – 3000 V
Insulation Resistance (R_S) (2)	100 MΩ
Max Capacitance (C_O) (3)	1.0 pF
Max Impulse Breakover Voltage (I_{BO}) (5)	3700 V

Maximum Ratings:

Impulse Discharge Current (4) ..... 3 kA, 10 shots

Storage Temperature T_{STG} ..... -40 - +150˚C

Operating Temperature ..... -40 - +150˚C

Notes:

(1) Measured @ 500 Volts / Second

(2) Measured @ 1000 Volts DC

(3) Measured @ 1 MHz, zero Volt bias

(4) Using 8/20µs double exponential pulse

(5) Measured at 100 Volts/µs rate of rise