查询MCT5200供应商 捷多邦，专业PCB打样工厂，24小时加急出货

FAIRCHILD SEMICONDUCTOR®

LOW INPUT CURRENT PHOTOTRANSISTOR OPTOCOUPLERS

MCT5200 MCT5201 MCT5210 MCT5211

Description

The MCT52XX series consists of a high-efficiency AlGaAs, infrared emitting diode, coupled with an NPN phototransistor in a six pin dual-in-line package.

The MCT52XX is well suited for CMOS to LSTT/TTL interfaces, offering 250% $CTR_{CE(SAT)}$ with 1 mA of LED input current. When an LED input current of 1.6 mA is supplied data rates to 20K bits/s are possible.

The MCT52XX can easily interface LSTTL to LSTTL/TTL, and with use of an external base to emitter resistor data rates of 100K bits/s can be achieved.

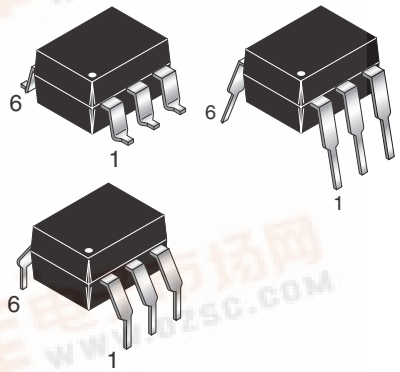

Features

- High $CTR_{CE(SAT)}$ comparable to Darlingtons
- CTR guaranteed 0°C to 70°C
- High common mode transient rejection 5kV/µs
- Data rates up to 150 kbits/s (NRZ)
- Underwriters Laboratory (UL) recognized (file #E90700)
- VDE recognized (file #94766)
  – Add option 300 (e.g., MCT5211.300)

Applications

- CMOS to CMOS/LSTTL logic isolation
- LSTTL to CMOS/LSTTL logic isolation
- RS-232 line receiver
- Telephone ring detector
- AC line voltage sensing
- Switching power supply

SCHEMATIC

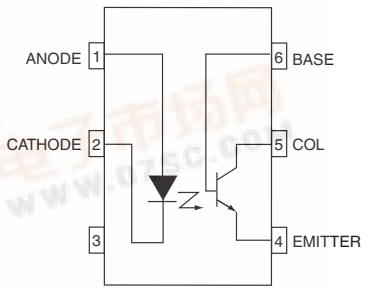

Parameters	Symbol	Device	Value	Units
TOTAL DEVICE				
Storage Temperature	T_{STG}	All	-55 to +150	°C
Operating Temperature	T_{OPR}	All	-55 to +100	°C
Lead Solder Temperature	T_{SOL}	All	260 for 10 sec	°C
Total Device Power Dissipation @ 25°C (LED plus detector)	P_D	All	260	mW
Derate Linearly From 25°C			3.5	mW/°C
EMITTER				
Continuous Forward Current	I_F	All	50	mA
Reverse Input Voltage	V_R	All	6	V
Forward Current - Peak (1 µs pulse, 300 pps)	$I_F(pk)$	All	3.0	A
LED Power Dissipation	P_D	All	75	mW
Derate Linearly From 25°C		All	1.0	mW/°C
DETECTOR				
Continuous Collector Current	I_C	All	150	mA
Detector Power Dissipation	P_D	All	150	mW
Derate Linearly from 25°C		All	2.0	mW/°C

找PDF 维库一下 pdf.dzsc.com

ELECTRICAL CHARACTERISTICS (T_A = 25°C Unless otherwise specified.)

INDIVIDUAL COMPONENT CHARACTERISTICS

Parameters	Test Conditions	Symbol	Device	Min	Typ**	Max	Units
EMITTER							
Input Forward Voltage	(I_F = 5 mA)	V_F	All		1.25	1.5	V
Forward Voltage Temp. Coefficient	(I_F = 2 mA)	$\frac{\Delta V_F}{\Delta T_A}$	All		-1.75		mV/°C
Reverse Voltage	(I_R = 10 µA)	V_R	All	6			V
Junction Capacitance	(V_F = 0 V, f = 1.0 MHz)	C_J	All		18		pF
DETECTOR							
Collector-Emitter Breakdown Voltage	(I_C = 1.0 mA, I_F = 0)	BV_{CEO}	All	30	100		V
Collector-Base Breakdown Voltage	(I_C = 10 µA, I_F = 0)	BV_{CBO}	All	30	120		V
Emitter-Base Breakdown Voltage	(I_C = 10 µA, I_F = 0)	BV_{EBO}	All	5	10		V
Collector-Emitter Dark Current	(V_{CE} = 10V, I_F = 0, R_{BE} = 1MΩ)	I_{CER}	All		1	100	nA
Capacitance Collector to Emitter	(V_{CE} = 0, f = 1 MHz)	C_{CE}	All		10		pF
Collector to Base	(V_{CB} = 0, f = 1 MHz)	C_{CB}	All		80		pF
Emitter to Base	(V_{EB} = 0, f = 1 MHz)	C_{EB}	All		15		pF

ISOLATION CHARACTERISTICS

Characteristic	Test Conditions	Symbol	Device	Min	Typ**	Max	Units
Input-Output Isolation Voltage(10)	(f = 60Hz, t = 1 min.)	V_{ISO}	All	5300			Vac(rms)
Isolation Resistance(10)	V_{I-O} = 500 VDC, T_A = 25°C	R_{ISO}	All	10^{11}			Ω
Isolation Capacitance(9)	V_{I-O} = 0, f = 1 MHz	C_{ISO}	All		0.7		pF
Common Mode Transient Rejection – Output High	V_{CM} = 50 V_{P-P1}, R_L= 750Ω, I_F = 0	CM_H	MCT5210/11		5000		V/µs
	V_{CM} = 50 V_{P-P}, R_L= 1KΩ, I_F = 0		MCT5200/01				
Common Mode Transient Rejection – Output Low	V_{CM} = 50 V_{P-P1}, R_L = 750Ω, I_F =1.6mA	CM_L	MCT5210/11		5000		V/µs
	V_{CM} = 50 V_{P-P1}, R_L= 1KΩ, I_F = 5 mA		MCT5200/01				

**All typical T_A=25°C

TRANSFER CHARACTERISTICS (T_A = 0°C to 70°C Unless otherwise specified.)

DC Characteristics	Test Conditions	Symbol	Device	Min	Typ**	Max	Units
Saturated Current Transfer Ratio(1) (Collector to Emitter)	I_F = 10 mA, V_{CE} = 0.4 V	$CTR_{CE(SAT)}$	MCT5200	75			%
	I_F = 5 mA, V_{CE} = 0.4 V		MCT5201	120			
	I_F = 3.0 mA, V_{CE} = 0.4 V		MCT5210	60			
	I_F = 1.6 mA, V_{CE} = 0.4 V		MCT5211	100			
	I_F = 1.0 mA, V_{CE} = 0.4 V			75			
Current Transfer Ratio (Collector to Emitter)(1)	I_F = 3.0 mA, V_{CE} = 5.0 V	$CTR_{(CE)}$	MCT5210	70			%
	I_F = 1.6 mA, V_{CE} = 5.0 V		MCT5211	150			
	I_F = 1.0 mA, V_{CE} = 5.0 V			110			
Current Transfer Ratio Collector to Base(2)	I_F = 10 mA, V_{CB} = 4.3 V	$CTR_{(CB)}$	MCT5200	0.2			%
	I_F = 5 mA, V_{CB} = 4.3 V		MCT5201	0.28			
	I_F = 3.0 mA, V_{CE} = 4.3 V		MCT5210	0.2			
	I_F = 1.6 mA, V_{CE} = 4.3 V		MCT5211	0.3			
	I_F = 1.0 mA, V_{CE} = 4.3 V			0.25			
Saturation Voltage	I_F = 10 mA, I_{CE} = 7.5 mA	$V_{CE(SAT)}$	MCT5200			0.4	V
	I_F = 5 mA, I_{CE} = 6 mA		MCT5201			0.4	
	I_F = 3.0 mA, I_{CE} = 1.8 mA		MCT5210			0.4	
	I_F = 1.6 mA, I_{CE} = 1.6 mA		MCT5211			0.4	

AC Characteristics	Test Conditions		Symbol	Device	Min	Typ	Max	Units
Propagation Delay High to Low(3)	R_L = 330 Ω, R_{BE} = ∞	I_F = 3.0 mA	T_{PHL}	MCT5210		10		µs
	R_L = 3.3 kΩ, R_{BE} = 39 kΩ	V_{CC} = 5.0 V				7		
	R_L = 750 Ω, R_{BE} = ∞	I_F = 1.6mA		MCT5211		14		
	R_L = 4.7 kΩ, R_{BE} = 91 kΩ	V_{CC} = 5.0V				15		
	R_L = 1.5 kΩ, R_{BE} = ∞	I_F = 1.0mA				17		
	R_L = 10 kΩ, R_{BE} = 160 kΩ	V_{CC} = 5.0V				24		
	V_{CE} = 0.4V, V_{CC} = 5V, R_L = fig. 13, R_{BE} = 330 kΩ	I_F = 10mA		MCT5200		1.6	12	
		I_F = 5mA		MCT5201		3	30	
Propagation Delay Low to High(4)	R_L = 330 Ω, R_{BE} = ∞	I_F = 3.0 mA	T_{PLH}	MCT5210		0.4		µs
	R_L = 3.3 kΩ, R_{BE} = 39 kΩ	V_{CC} = 5.0 V				8		
	R_L = 750 Ω, R_{BE} = ∞	I_F = 1.6mA		MCT5211		2.5		
	R_L = 4.7 kΩ, R_{BE} = 91 kΩ	V_{CC} = 5.0V				11		
	R_L = 1.5 kΩ, R_{BE} = ∞	I_F = 1.0mA				7		
	R_L = 10 kΩ, R_{BE} = 160 kΩ	V_{CC} = 5.0 V				16		
	V_{CE} = 0.4V, V_{CC} = 5V, R_L = fig. 13, R_{BE} = 330 kΩ	I_F = 10mA		MCT5200		18	20	
		I_F = 5mA		MCT5201		12	13	
Delay Time(5)	V_{CE} = 0.4V, R_{BE} = 330 kΩ, R_L = 1 kΩ, V_{CC} = 5V	I_F = 10mA	t_d	MCT5200		0.5	7	µs
		I_F = 5mA		MCT5201		1.1	15	
Rise Time(6)	V_{CE} = 0.4V, R_{BE} = 330 kΩ, R_L = 1 kΩ, V_{CC} = 5V	I_F = 10mA	t_r	MCT5200		1.3	6	µs
		I_F = 5mA		MCT5201		2.5	20	

TRANSFER CHARACTERISTICS (T_A = 0°C to 70°C Unless otherwise specified.) (Continued)

DC Characteristics	Test Conditions		Symbol	Device	Min	Typ**	Max	Units
Storage Time(7)	V_{CE} = 0.4V, R_{BE} = 330 kΩ, R_L = 1 kΩ, V_{CC} = 5V	I_F = 10mA	t_s	MCT5200		15	18	µs
		I_F = 5mA		MCT5201		10	13	
Fall Time(8)	V_{CE} = 0.4V, R_{BE} = 330 kΩ, R_L = 1 kΩ, V_{CC} = 5V	I_F = 10mA	t_f	MCT5200		16	30	µs
		I_F = 5mA		MCT5201		16	30	

**All typicals at T_A = 25°C

Notes
1. DC Current Transfer Ratio (CTR_{CE}) is defined as the transistor collector current (I_{CE}) divided by the input LED current (I_F) x 100%, at a specified voltage between the collector and emitter (V_{CE}).
2. The collector base Current Transfer Ratio (CTR_{CB}) is defined as the transistor collector base photocurrent(I_{CB}) divided by the input LED current (I_F) time 100%.
3. Referring to Figure 14 the T_{PHL} propagation delay is measured from the 50% point of the rising edge of the data input pulse to the 1.3V point on the falling edge of the output pulse.
4. Referring to Figure 14 the T_{PLH} propagation delay is measured from the 50% point of the falling edge of data input pulse to the 1.3V point on the rising edge of the output pulse.
5. Delay time (t_d) is measured from 50% of rising edge of LED current to 90% of Vo falling edge.
6. Rise time (t_r) is measured from 90% to 10% of Vo falling edge.
7. Storage time (t_s) is measured from 50% of falling edge of LED current to 10% of Vo rising edge.
8. Fall time (t_f) is measured from 10% to 90% of Vo rising edge.
9. C_{ISO} is the capacitance between the input (pins 1, 2, 3 connected) and the output, (pin 4, 5, 6 connected).
10. Device considered a two terminal device: Pins 1, 2, and 3 shorted together, and pins 5, 6 and 7 are shorted together.

TYPICAL PERFORMANCE GRAPHS

Fig. 1 LED Forward Voltage vs. Forward Current

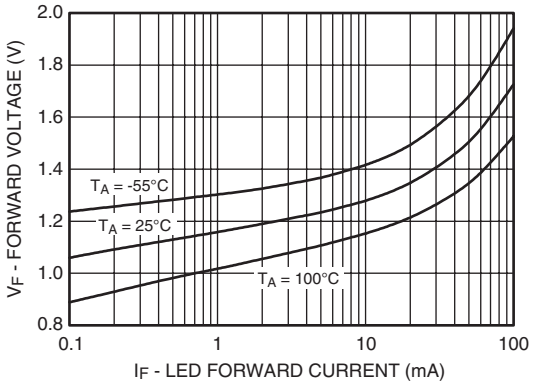

Fig. 2 Normalized Current Transfer Ratio vs. Forward Current

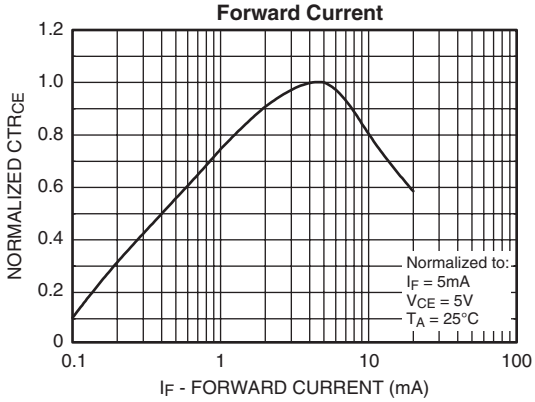

Fig. 3 Normalized CTR vs. Temperature

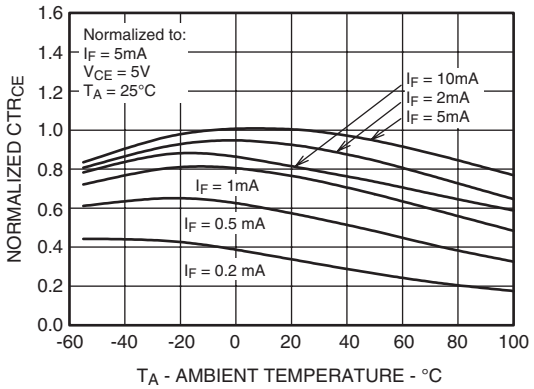

Fig. 4 Normalized Collector vs. Collector - Emitter Voltage

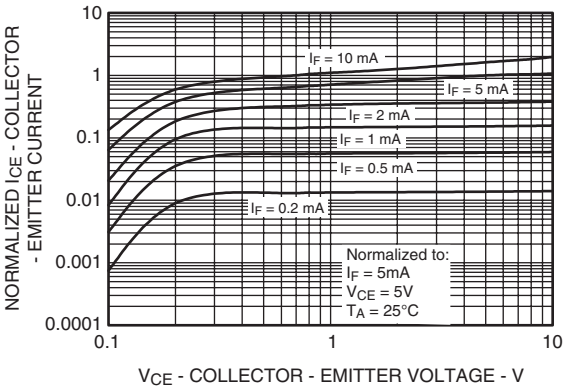

Fig. 5 Normalized Collector Base Photocurrent Ratio vs. Forward Current

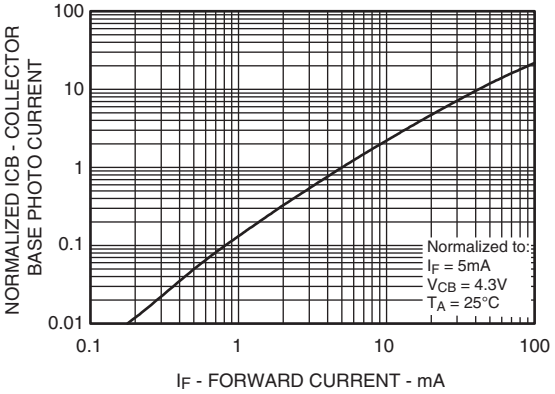

Fig. 6 Normalized Collector - Base Current vs. Temperature

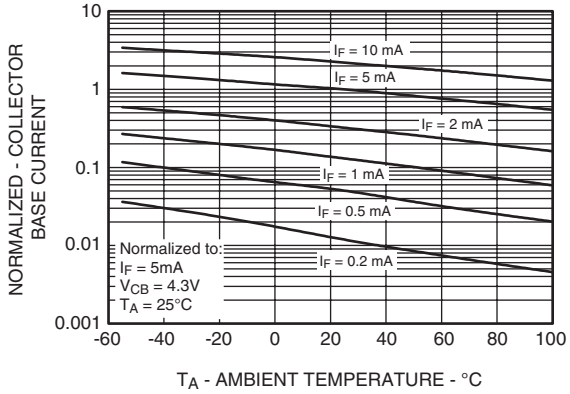

TYPICAL PERFORMANCE GRAPHS (Continued)

Fig. 7 Collector-Emitter Dark Current vs. Ambient Temperature

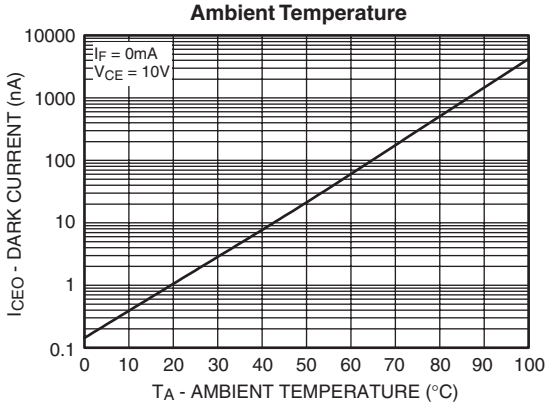

Fig. 8 Switching Time vs. Ambient Temperature

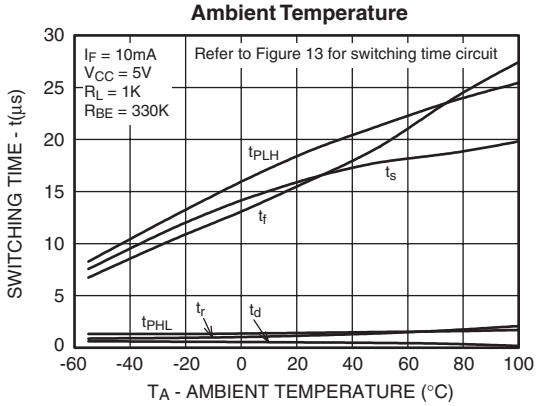

Fig. 9 Switching Time vs. Ambient Temperature

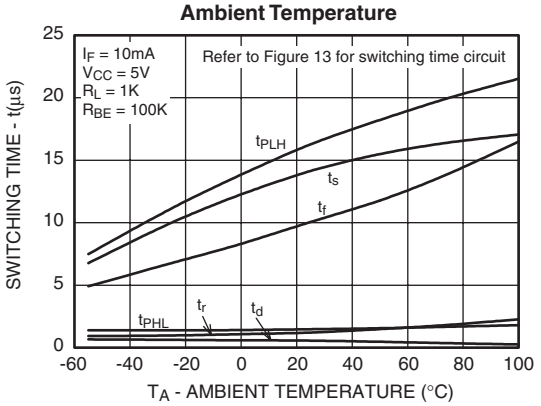

Fig. 10 Switching Time vs. Ambient Temperature

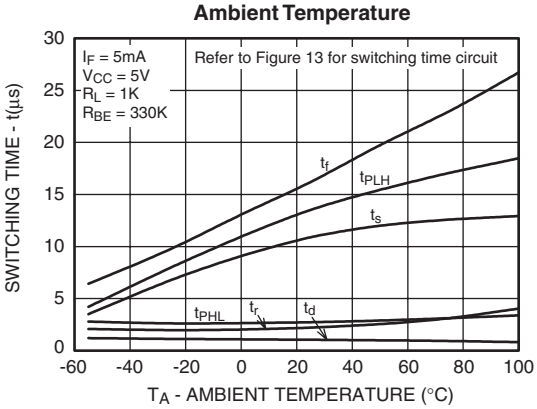

Fig. 11 Switching Time vs. Ambient Temperature

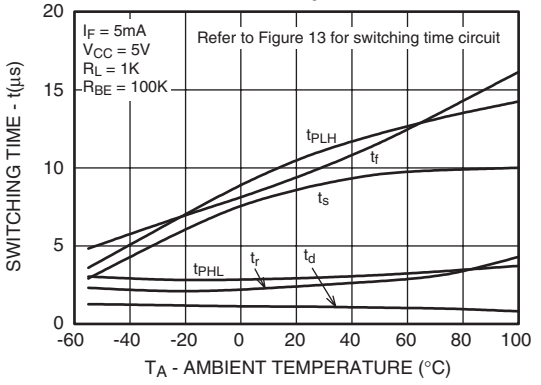

Fig. 12 Turn-on Time vs. Base-Emitter Resistance

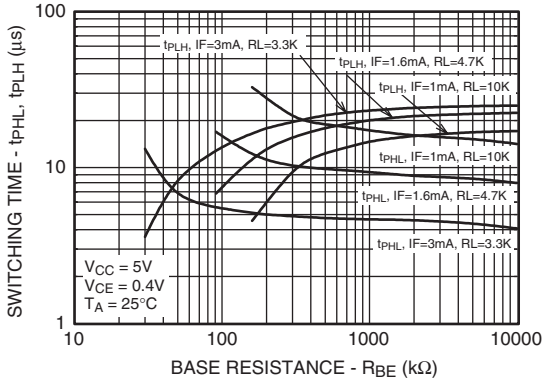

TYPICAL ELECTRO-OPTICAL CHARACTERISTICS (TA = 25°C Unless Otherwise Specified)

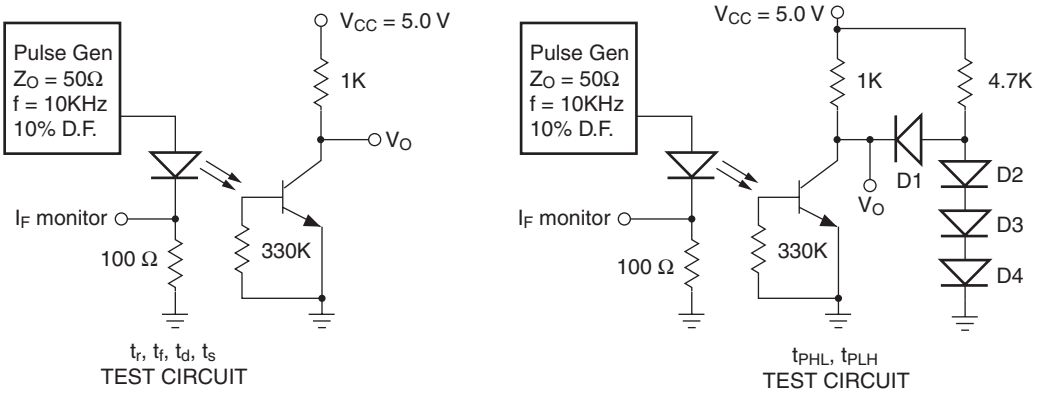

Figure 13.

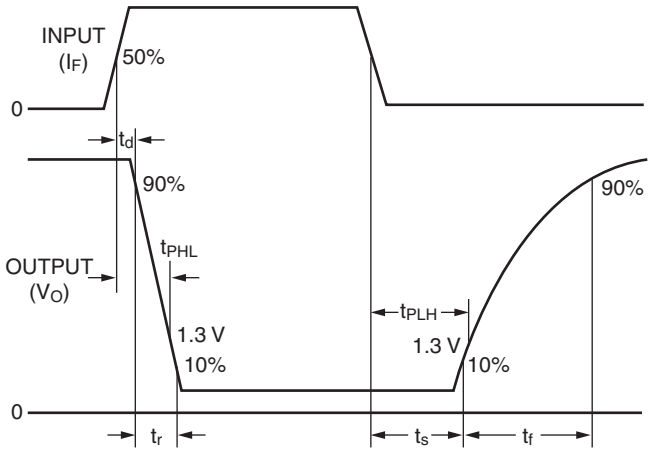

Figure 14. Switching Circuit Waveforms

FAIRCHILD SEMICONDUCTOR®

LOW INPUT CURRENT PHOTOTRANSISTOR OPTOCOUPLERS

MCT5200 MCT5201 MCT5210 MCT5211

Package Dimensions (Through Hole)

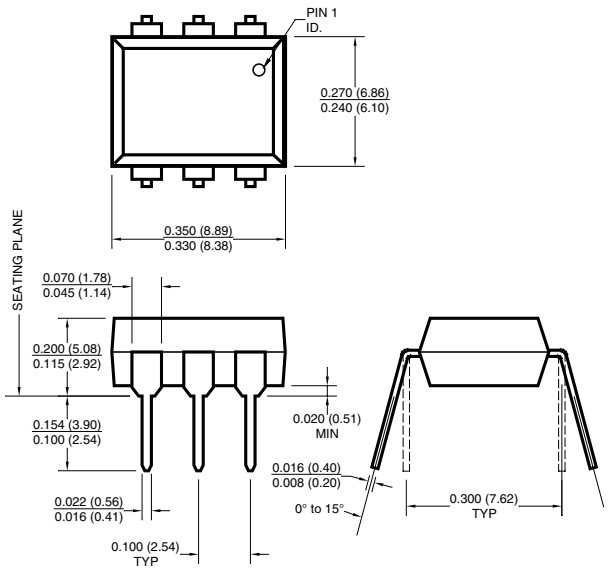

Package Dimensions (Surface Mount)

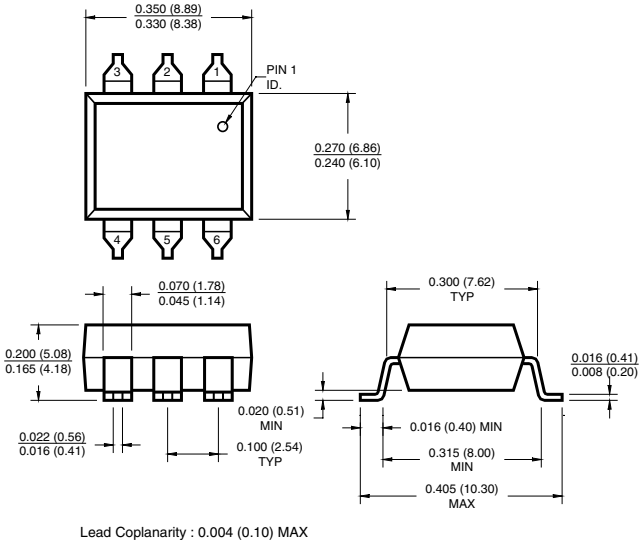

Package Dimensions (0.4" Lead Spacing)

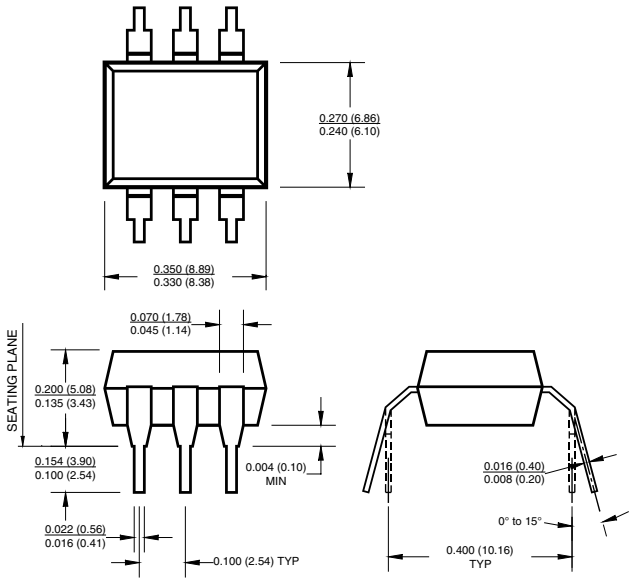

Recommended Pad Layout for Surface Mount Leadform

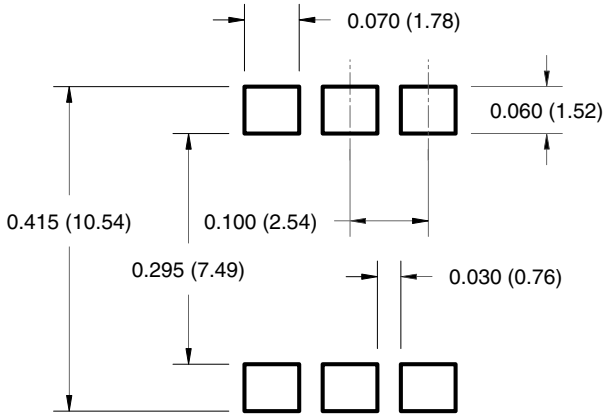

Note
All dimensions are in inches (millimeters)

FAIRCHILD SEMICONDUCTOR®

LOW INPUT CURRENT PHOTOTRANSISTOR OPTOCOUPLERS

MCT5200 MCT5201 MCT5210 MCT5211

ORDERING INFORMATION

Option	Order Entry Identifier	Description
S	.S	Surface Mount Lead Bend
SD	.SD	Surface Mount; Tape and Reel
W	.W	0.4" Lead Spacing
300	.300	VDE 0884
300W	.300W	VDE 0884, 0.4" Lead Spacing
3S	.3S	VDE 0884, Surface Mount
3SD	.3SD	VDE 0884, Surface Mount, Tape and Reel

MARKING INFORMATION

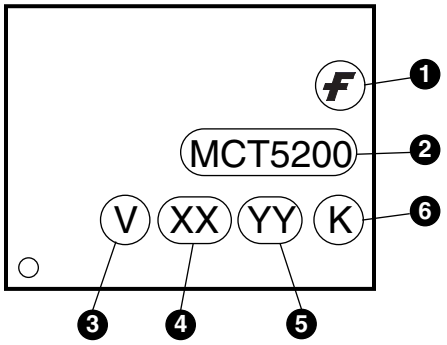

Definitions	
1	Fairchild logo
2	Device number
3	VDE mark (Note: Only appears on parts ordered with VDE option – See order entry table)
4	Two digit year code, e.g., ‘03’
5	Two digit work week ranging from ‘01’ to ‘53’
6	Assembly package code

Carrier Tape Specifications

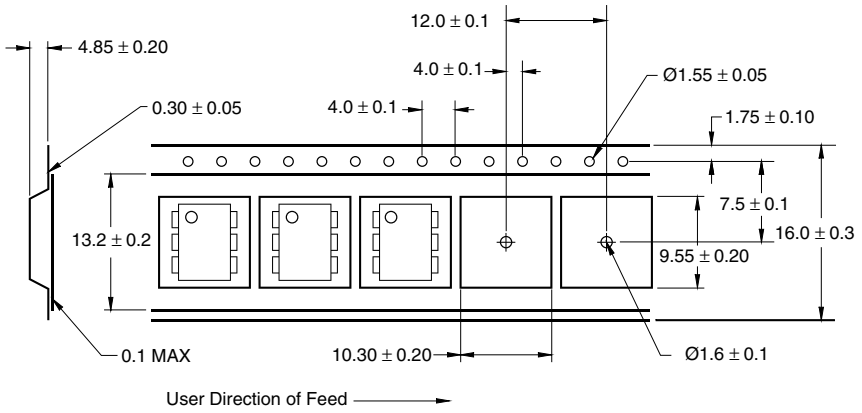

NOTE
All dimensions are in inches (millimeters)

Reflow Profile (Black Package, No Suffix)

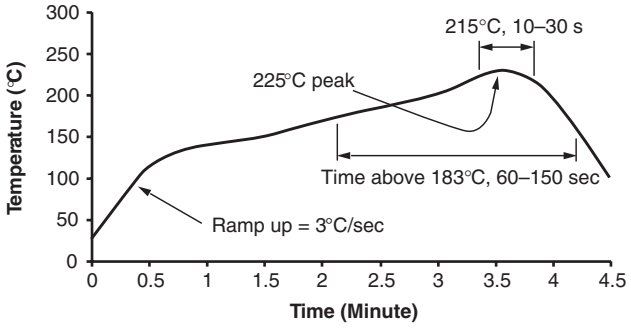

- Peak reflow temperature: 225°C (package surface temperature)
- Time of temperature higher than 183°C for 60–150 seconds
- One time soldering reflow is recommended

FAIRCHILD SEMICONDUCTOR®

LOW INPUT CURRENT PHOTOTRANSISTOR OPTOCOUPLERS

MCT5200 MCT5201 MCT5210 MCT5211

DISCLAIMER

FAIRCHILD SEMICONDUCTOR RESERVES THE RIGHT TO MAKE CHANGES WITHOUT FURTHER NOTICE TO ANY PRODUCTS HEREIN TO IMPROVE RELIABILITY, FUNCTION OR DESIGN. FAIRCHILD DOES NOT ASSUME ANY LIABILITY ARISING OUT OF THE APPLICATION OR USE OF ANY PRODUCT OR CIRCUIT DESCRIBED HEREIN; NEITHER DOES IT CONVEY ANY LICENSE UNDER ITS PATENT RIGHTS, NOR THE RIGHTS OF OTHERS.

LIFE SUPPORT POLICY

FAIRCHILD'S PRODUCTS ARE NOT AUTHORIZED FOR USE AS CRITICAL COMPONENTS IN LIFE SUPPORT DEVICES OR SYSTEMS WITHOUT THE EXPRESS WRITTEN APPROVAL OF THE PRESIDENT OF FAIRCHILD SEMICONDUCTOR CORPORATION. As used herein:

1. Life support devices or systems are devices or systems which, (a) are intended for surgical implant into the body, or (b) support or sustain life, and (c) whose failure to perform when properly used in accordance with instructions for use provided in the labeling, can be reasonably expected to result in a significant injury of the user.
2. A critical component in any component of a life support device or system whose failure to perform can be reasonably expected to cause the failure of the life support device or system, or to affect its safety or effectiveness.