PART NO.	"A" REF.	"B" THICKNESS RANGE	"C" REF.	"D" REF.	"E" ±.002 (0.05) HOLE DIA.
SFF–018	.71 (18.0)	.031–.059 (0.8–1.5)	.39 (10.0)	.79 (20.0)	.305 (7.75)
SFF–021	.79 (20.0)	.197–.315 (5.0–8.0)	.24 (6.0)	.83 (21.0)	
SFF–023	.91 (23.0)	.031–.059 (0.8–1.5)	.20 (5.0)	.98 (25.0)	
SFF–028	.71 (18.0)	.031–.059 (0.8–1.5)	.59 (15.0)	.79 (20.0)	

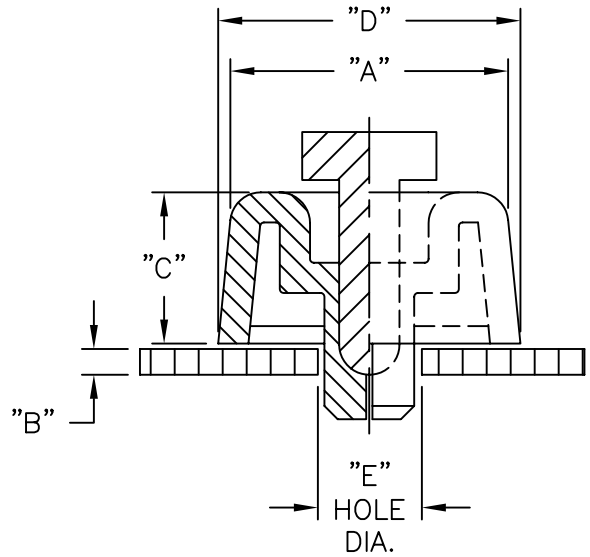

NOTES:
1. MATERIAL:
   FOOT: SANTOPRENE (RMS–42),
   80 DUROMETER, SHORE A.
   PIN: POLYPROPYLENE (RMS–126).
2. COLOR: BLACK.
3. SHEAR FORCE: 10 KG MIN.

REV	DESCRIPTION	ENGR DATE
F	CORRECTED TABLE; NOTE 3 WAS EXT. FORCE 8–15 KG, ADDED RMS–126 TO MAT'L NOTE & CHANGED FILE NO.	SM 05.30.01
E	ADDED NOTE 3.	SM 03.01.01
D	CORRECTED "A,C,D" DIM.	AM 5/6/99
C	TOL. ON "E" & "E" CHANGED	PB 08.17.95
B	CONVERTED TO ACAD	PB 06.08.95
A	ADDED P/N SFF–028	RS 01.22.92

TITLE: SOFT FAST FEET

DWG IN IN (MM)

TOLERANCES UNLESS NOTED
.XX=±.010
.XXX=±.005
FRAC=±1/64
ANG=±1°

FILE # SFF
MAT'L: SEE NOTES
RE: RICHCO, INC.

DWN: P.B.
DT: 06–08–95
APP:
DT:

RICHCO INC.
PO BOX 804238,CHICAGO,60680
(773) 539–4060

FINAL

PART # SEE TABLE

PRINT TYPE CA