查询SY100EL58供应商 捷多邦，专业PCB打样工厂，24小时加急出货

The Infinite Bandwidth Company™

2:1 MULTIPLEXER

SY10EL58
SY100EL58

FEATURES

- **230ps propagation delay**
- **High bandwidth output transitions**
- **Internal 75KΩ input pull-down resistors**
- **Available in 8-pin SOIC package**

DESCRIPTION

The SY10/100EL58 are 2:1 multiplexers. These devices are functionally equivalent to the E158 devices, with higher performance capabilities. With propagation delays and output transition times significantly faster than the E158, the EL58 is ideally suited for those applications which require the ultimate in AC performance.

PIN CONFIGURATION/BLOCK DIAGRAM

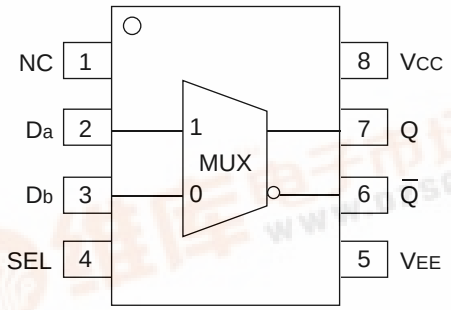

SOIC
TOP VIEW

TRUTH TABLE

SEL	Data
H	a
L	b

PIN NAMES

Pin	Function
D_a, D_b	Data Inputs
Q	Data Outputs
SEL	Select Input

找PDF 维库一下 pdf.dzsc.com

DC ELECTRICAL CHARACTERISTICS

V_{EE} = V_{EE} (Min.) to V_{EE} (Max.); V_{CC} = GND

Symbol	Parameter	T_A = -40°C			T_A = 0°C			T_A = +25°C			T_A = +85°C			Unit
		Min.	Typ.	Max.	Min.	Typ.	Max.	Min.	Typ.	Max.	Min.	Typ.	Max.	
I_{EE}	Power Supply Current													mA
	10EL	—	14	17	11	14	17	11	14	17	11	14	17	
	100EL	—	14	17	11	14	17	11	14	17	13	16	19	
V_{EE}	Power Supply Voltage													V
	10EL	–4.75	–5.2	–5.5	–4.75	–5.2	–5.5	–4.75	–5.2	–5.5	–4.75	–5.2	–5.5	
	100EL	–4.20	–4.5	–5.5	–4.20	–4.5	–5.5	–4.20	–4.5	–5.5	–4.20	–4.5	–5.5	
I_{IH}	Input HIGH Current	—	—	150	—	—	150	—	—	150	—	—	150	µA

AC ELECTRICAL CHARACTERISTICS

V_{EE} = V_{EE} (Min.) to V_{EE} (Max.); V_{CC} = GND

Symbol	Parameter	T_A = -40°C			T_A = 0°C			T_A = +25°C			T_A = +85°C			Unit
		Min.	Typ.	Max.	Min.	Typ.	Max.	Min.	Typ.	Max.	Min.	Typ.	Max.	
t_{PLH}	Propagation Delay to	60	220	380	110	220	330	120	230	340	140	250	360	ps
t_{PHL}	Output D	90	250	410	140	250	360	150	260	370	170	280	390	
t_r	Output Rise/Fall Times Q	100	225	350	100	225	350	100	225	350	100	225	350	ps
t_f	(20% to 80%)													

PRODUCT ORDERING CODE

Ordering Code	Package Type	Operating Range
SY10EL58ZC	Z8-1	Commercial
SY10EL58ZCTR	Z8-1	Commercial
SY100EL58ZC	Z8-1	Commercial
SY100EL58ZCTR	Z8-1	Commercial

8 LEAD SOIC .150" WIDE (Z8-1)

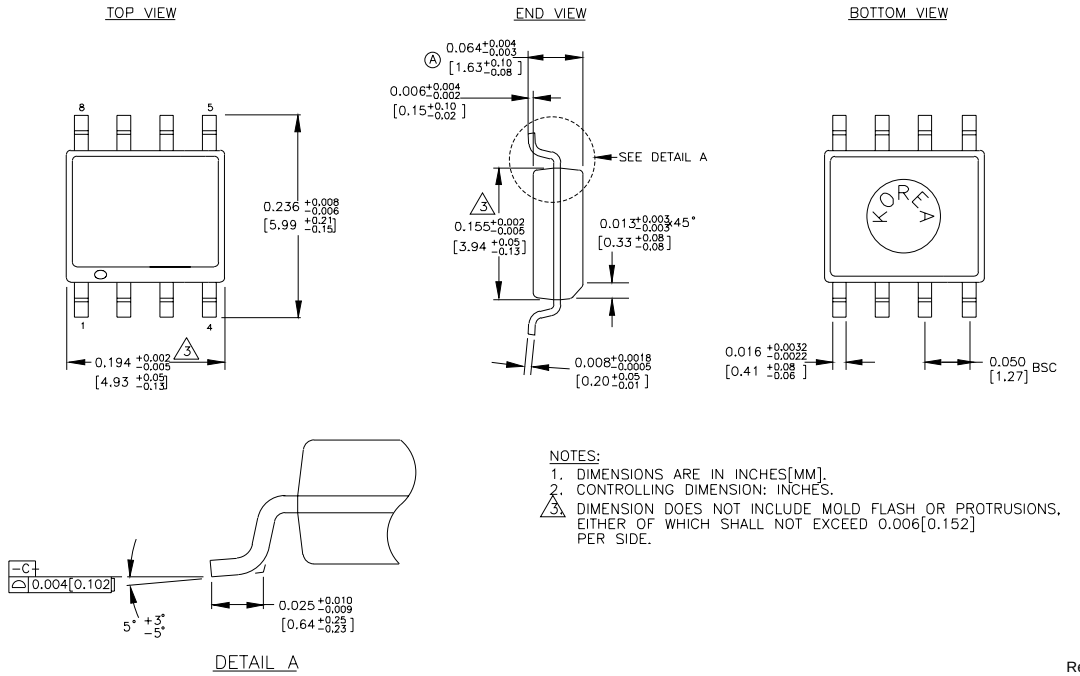

NOTES:
1. DIMENSIONS ARE IN INCHES[MM].
2. CONTROLLING DIMENSION: INCHES.
3. DIMENSION DOES NOT INCLUDE MOLD FLASH OR PROTRUSIONS, EITHER OF WHICH SHALL NOT EXCEED 0.006[0.152] PER SIDE.

Rev. 03

MICREL-SYNERGY 3250 SCOTT BOULEVARD SANTA CLARA CA 95054 USA
TEL + 1 (408) 980-9191 FAX + 1 (408) 914-7878 WEB http://www.micrel.com

This information is believed to be accurate and reliable, however no responsibility is assumed by Micrel for its use nor for any infringement of patents or other rights of third parties resulting from its use. No license is granted by implication or otherwise under any patent or patent right of Micrel Inc.

© 2000 Micrel Incorporated