查询TLS001供应商 捷多邦，专业PCB打样工厂，24小时加急出货

TLS Series Telecommunications Power Fuse

170 VDC ▪ Current Limiting ▪ 1 – 125 Amperes

Littelfuse® POWR-GARD™ Products

NEW

Littelfuse's TLS Series fuses are designed specifically for the protection of telecommunications equipment. TLS fuses have been engineered to operate up to 170 VDC to provide current limiting short circuit protection for cables and components found in the DC power distribution circuits of telecommunications systems. The TLS' compact design provides superior protection and high power density in an extremely compact package.

FEATURES

- 170 VDC
- Current limiting
- 1 to 125 amperes
- Multiple mounting configurations

SPECIFICATIONS

Voltage Rating: 170 VDC

Interrupting Rating: 100,000 amperes

Ampere Range: 1 – 125 amperes

Approvals: UL Recognized under the components program (File No: E71611)

Construction: Caps: Silver-plated brass
Body: Glass melamine

AMPERE RATINGS

1	6	20	35	60	90
3	10	25	40	70	100
5	15	30	50	80	125

Example part number (series & amperage): TLS050

ORDERING INFORMATION

Catalog No.	Catalog No. Leaded Version*	Ampere Rating
TLS001	TLS001L	1
TLS003	TLS003L	3
TLS005	TLS005L	5
TLS006	TLS006L	6
TLS010	TLS010L	10
TLS015	TLS015L	15
TLS020	TLS020L	20
TLS025	TLS025L	25
TLS030	TLS030L	30
TLS035	TLS035L	35
TLS040	TLS040L	40
TLS050	TLS050L	50
TLS060	TLS060L	60
TLS070	TLS070L	70
TLS080	TLS080L	80
TLS090	TLS090L	90
TLS100	TLS100L	100
TLS125	TLS125L	125

* Used for circuit board applications.

RECOMMENDED FUSE BLOCKS

LTFD series disconnect switches

Contact factory for more information.

Telecom Products

TLS TLS-V TLS-L TLS-LB

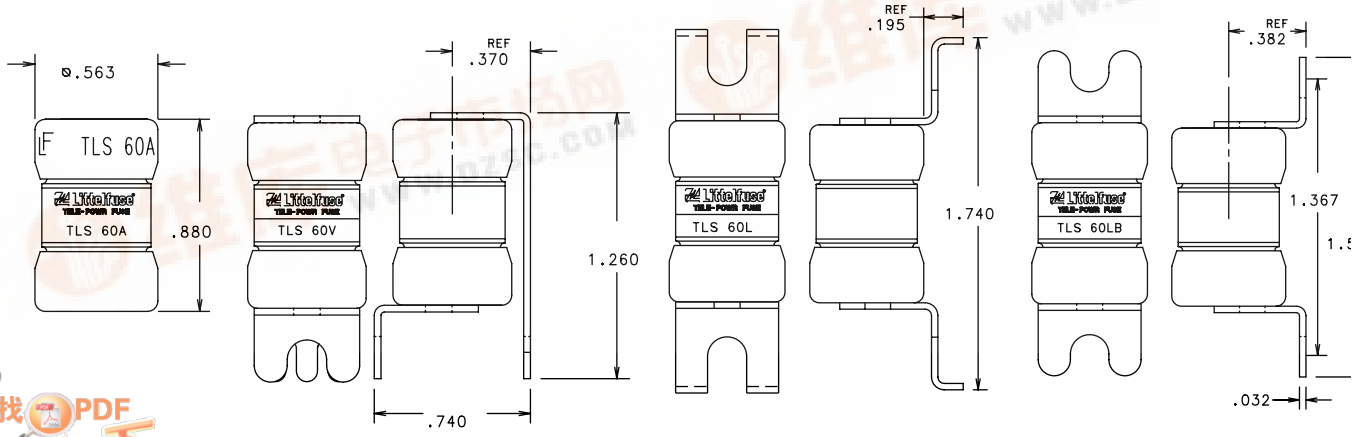

Contact Littelfuse for characteristic curves. Dimensions for reference only.
Replaces competitors' TPS and TGS Series.

找PDF 维库一下 pdf.dzsc.com