查询"74ACTQ823SCX"供应商

National Semiconductor

August 1998

54ACT823
9-Bit D Flip-Flop

General Description

The ACT823 is a 9-bit buffered register. It features Clock Enable and Clear which are ideal for parity bus interfacing in high performance microprogramming systems. The ACT823 offers noninverting outputs and is fully compatible with AMD's Am29823.

- TRI-STATE outputs for bus interfacing
- Inputs and outputs are on opposite sides
- ACT823 has TTL-compatible inputs
- Standard Microcircuit Drawing (SMD) 5962-9161001

Features

- Outputs source/sink 24 mA

Ordering Code

Order Number	Package Number	Package Description
54ACT823DMQB	J24A	24-Lead Ceramic Dual-in-line
54ACT823FMQB	W24C	24-Lead Cerpack
54ACT823LMQB	E28A	28-Lead Ceramic Leadless Chip Carrier, Type C

Logic Symbols

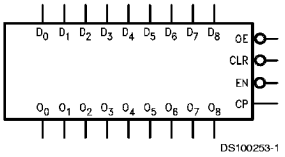

IEEE/IEC

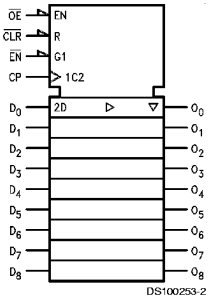

Pin Names	Description
D_0–D_8	Data Inputs
O_0–O_8	Data Outputs
$\overline{OE}$	Output Enable
$\overline{CLR}$	Clear
CP	Clock Input
$\overline{EN}$	Clock Enable

FACT™ is a trademark of Fairchild Semiconductor Corporation.
TRI-STATE™ is a trademark of National Semiconductor Corporation.

© 1998 National Semiconductor Corporation DS100253

Powered by ICminer.com Electronic-Library Service CopyRight 2003

查询"74ACTQ823SCX"供应商

Connection Diagrams

Pin Assignment for DIP and Cerpack

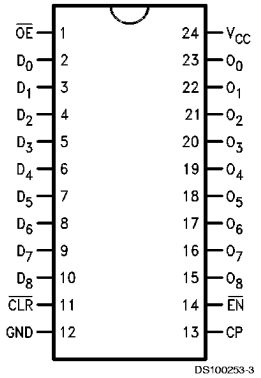

Pin Assignment for LCC

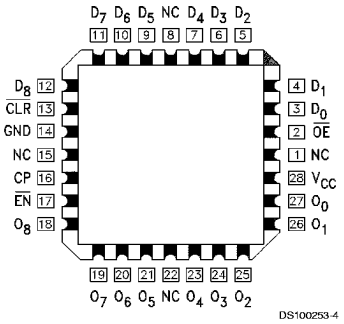

Powered by ICminer.com Electronic-Library Service CopyRight 2003

查询"74ACTQ823SCX"供应商

Functional Description

The ACT823 consists of nine D-type edge-triggered flip-flops. These have TRI-STATE outputs for bus systems organized with inputs and outputs on opposite sides. The buffered clock (CP) and buffered Output Enable ($\overline{OE}$) are common to all flip-flops. The flip-flops will store the state of their individual D inputs that meet the setup and hold time requirements on the LOW-to-HIGH CP transition. With $\overline{OE}$ LOW, the contents of the flip-flops are available at the outputs. When $\overline{OE}$ is HIGH, the outputs go to the high impedance state. Operation of the $\overline{OE}$ input does not affect the state of the flip-flops. In addition to the Clock and Output Enable pins, there are Clear ($\overline{CLR}$) and Clock Enable ($\overline{EN}$) pins. These devices are ideal for parity bus interfacing in high performance systems.

When $\overline{CLR}$ is LOW and $\overline{OE}$ is LOW, the outputs are LOW. When $\overline{CLR}$ is HIGH, data can be entered into the flip-flops. When $\overline{EN}$ is LOW, data on the inputs is transferred to the outputs on the LOW-to-HIGH clock transition. When the $\overline{EN}$ is HIGH, the outputs do not change state, regardless of the data or clock input transitions.

Function Table

Inputs					Internal	Output	Function
$\overline{OE}$	$\overline{CLR}$	$\overline{EN}$	CP	D	Q	O	
H	X	L	N	L	L	Z	High Z
H	X	L	N	H	H	Z	High Z
H	L	X	X	X	L	Z	Clear
L	L	X	X	X	L	L	Clear
H	H	H	X	X	NC	Z	Hold
L	H	H	X	X	NC	NC	Hold
H	H	L	N	L	L	Z	Load
H	H	L	N	H	H	Z	Load
L	H	L	N	L	L	L	Load
L	H	L	N	H	H	H	Load

H = HIGH Voltage Level
L = LOW Voltage Level
X = Immaterial
Z = High Impedance
N = LOW-to-HIGH Transition
NC = No Change

Logic Diagram

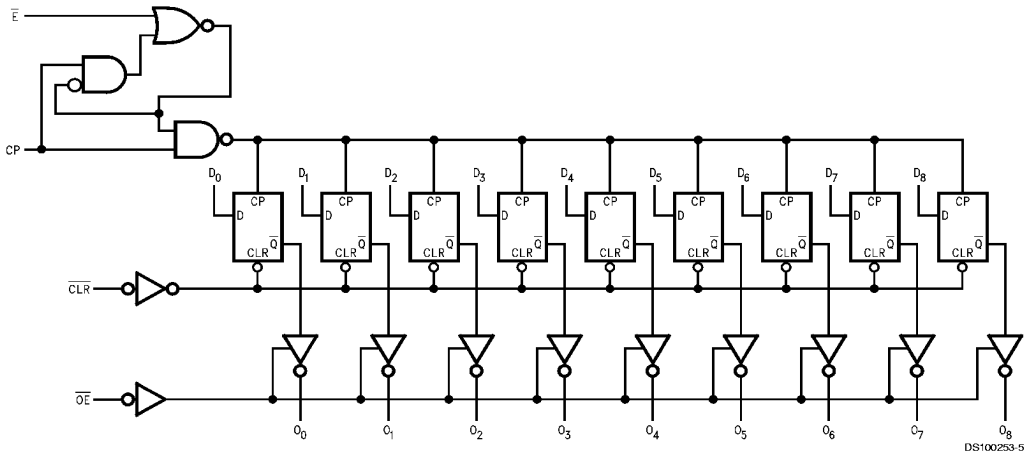

Please note that this diagram is provided only for the understanding of logic operations and should not be used to estimate propagation delays.

Powered by ICminer.com Electronic-Library Service CopyRight 2003

查询"74ACTQ823SCX"供应商

Absolute Maximum Ratings (Note 1)

If Military/Aerospace specified devices are required, please contact the National Semiconductor Sales Office/ Distributors for availability and specifications.

Supply Voltage (V_{CC})	−0.5V to 7.0V
DC Input Diode Current (I_{IK})	
V_I = −0.5V	−20 mA
V_I = V_{CC} + 0.5V	+20 mA
DC Input Voltage (V_I)	−0.5V to V_{CC} + 0.5V
DC Output Diode Current (I_{OK})	
V_O = −0.5V	−20 mA
V_O = V_{CC} + 0.5V	+20 mA
DC Output Voltage (V_O)	−0.5V to V_{CC} + 0.5V
DC Output Source or Sink Current (I_O)	±50 mA
DC V_{CC} or Ground Current per Output Pin (I_{CC} or I_{GND})	±50 mA
Storage Temperature (T_{STG})	−65˚C to +150˚C
Junction Temperature (T_J)	
CDIP	175˚C

Recommended Operating Conditions

Supply Voltage (V_{CC})	
ACT	4.5V to 5.5V
Input Voltage (V_I)	0V to V_{CC}
Output Voltage (V_O)	0V to V_{CC}
Operating Temperature (T_A)	
54ACT	−55˚C to +125˚C
Minimum Input Edge Rate (ΔV/Δt)	
ACT Devices	
V_{IN} from 0.8V to 2.0V	
V_{CC} @ 4.5V, 5.5V	125 mV/ns

Note 1: Absolute maximum ratings are those values beyond which damage to the device may occur. The databook specifications should be met, without exception, to ensure that the system design is reliable over its power supply, temperature, and output/input loading variables. National does not recommend operation of FACT™ circuits outside databook specifications.

DC Electrical Characteristics

Symbol	Parameter	V_{CC} (V)	T_A = −55˚C to +125˚C	Units	Conditions
V_{IH}	Minimum High Level Input Voltage	4.5 5.5	2.0 2.0	V	V_{OUT} = 0.1V or V_{CC} −0.1V
V_{IL}	Maximum Low Level Input Voltage	4.5 4.5	0.8 0.8	V	V_{OUT} = 0.1V or V_{CC} −0.1V
V_{OH}	Minimum High Level Output Voltage	4.5	3.7	V	I_{OH} = −24 mA
V_{OL}	Maximum Low Level Output Voltage	4.5	0.5	V	I_{OL} = 24 mA
I_{IN}	Maximum Input Leakage Current	5.5	±1.0	μA	V_I = V_{CC}, GND
I_{OZ}	Maximum TRI-STATE Current	5.5	±10.0	μA	V_I = V_{IL}, V_{IH} V_O = V_{CC}, GND
I_{CCT}	Maximum I_{CC}/Input	5.5	1.6	mA	V_I = V_{CC} −2.1V
I_{OLD}	(Note 3) Minimum Dynamic Output Current	5.5	50	mA	V_{OLD} = 1.65V Max
I_{OHD}		5.5	−50	mA	V_{OHD} = 3.85V Min
I_{CC}	Maximum Quiescent Supply Current	5.5	160	μA	V_{IN} = V_{CC} or GND

Note 2: All outputs loaded; thresholds on input associated with output under test.

Note 3: Maximum test duration 2.0 ms, one output loaded at a time.

AC Electrical Characteristics

Symbol	Parameter	V_{CC} (V) (Note 4)	T_A = −55˚C to +125˚C C_L = 50 pF		Units
			Min	Max	
f_{max}	Maximum Clock Frequency	5.0	95		MHz
t_{PLH}	Propagation Delay CP to O_n	5.0	1.0	12.0	ns

Powered by ICminer.com Electronic-Library Service CopyRight 2003

查询"74ACTQ823SCX"供应商

AC Electrical Characteristics (Continued)

Symbol	Parameter	V_{CC} (V) (Note 4)	T_A = −55°C to +125°C C_L = 50 pF		Units
			Min	Max	
t_{PHL}	Propagation Delay CP to O_n	5.0	1.0	12.0	ns
t_{PHL}	Propagation Delay $\overline{CLR}$ to O_n	5.0	1.0	18.0	ns
t_{PZH}	Output Enable Time $\overline{OE}$ to O_n	5.0	1.0	11.5	ns
t_{PZL}	Output Enable Time $\overline{OE}$ to O_n	5.0	1.0	12.0	ns
t_{PHZ}	Output Disable Time $\overline{OE}$ to O_n	5.0	1.0	13.5	ns
t_{PLZ}	Output Disable Time $\overline{OE}$ to O_n	5.0	1.0	12.0	ns

Note 4: Voltage Range 5.0 is 5.0V ±0.5V

AC Operating Requirements

Symbol	Parameter	V_{CC}(V) (Note 5)	T_A = −55°C to +125°C C_L = 50 pF	Units
			Guaranteed Minimum	
t_s	Setup Time, HIGH or LOW D to CP	5.0	4.0	ns
t_h	Hold Time, HIGH or LOW D_n to CP	5.0	3.0	ns
t_s	Setup Time, HIGH or LOW $\overline{EN}$ to CP	5.0	4.0	ns
t_h	Hold Time, HIGH or LOW $\overline{EN}$ to CP	5.0	3.0	ns
t_w	CP Pulse Width HIGH or LOW	5.0	6.0	ns
t_w	$\overline{CLR}$ Pulse Width, LOW	5.0	7.5	ns
t_{rec}	$\overline{CLR}$ to CP Recovery Time	5.0	4.5	ns

Note 5: Voltage Range 5.0 is 5.0V ±0.5V

Powered by ICminer.com Electronic-Library Service CopyRight 2003

查询"74ACTQ823SCX"供应商

Capacitance

Symbol	Parameter	Max	Units	Conditions
C_{IN}	Input Capacitance	4.5	pF	V_{CC} = OPEN
C_{PD}	Power Dissipation Capacitance	4.4	pF	V_{CC} = 5.0V

Powered by ICminer.com Electronic-Library Service CopyRight 2003

查询"74ACTQ823SCX"供应商

Physical Dimensions inches (millimeters) unless otherwise noted

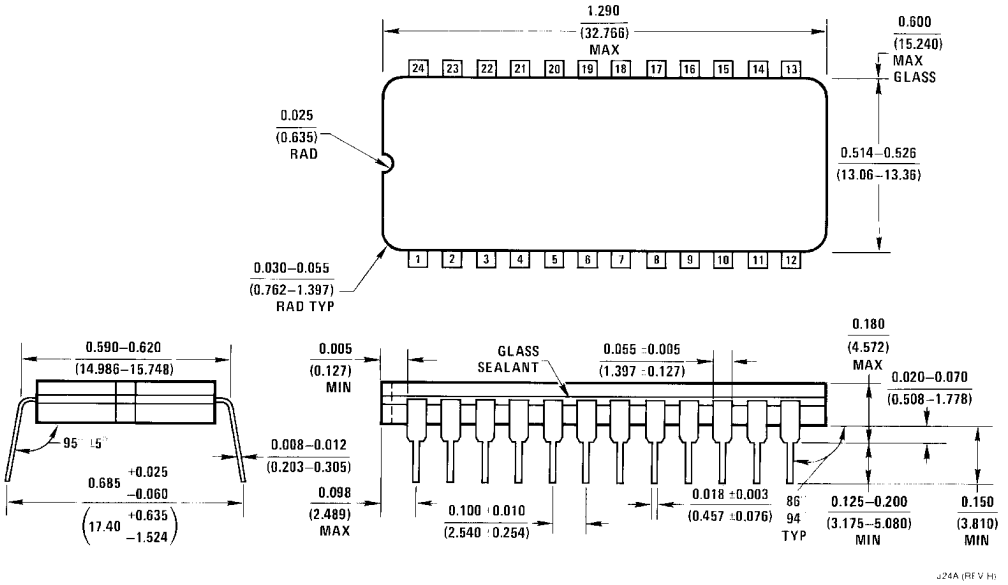

24 Lead Ceramic Dual-in-line
Package Number J24A

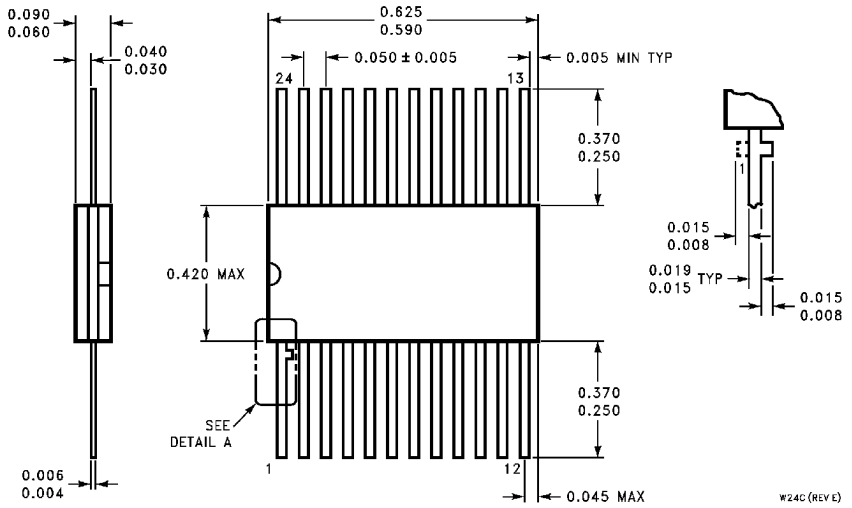

24 Lead Cerpack
Package Number W24C

Powered by ICminer.com Electronic-Library Service CopyRight 2003

查询"74ACTQ823SCX"供应商

Physical Dimensions inches (millimeters) unless otherwise noted (Continued)

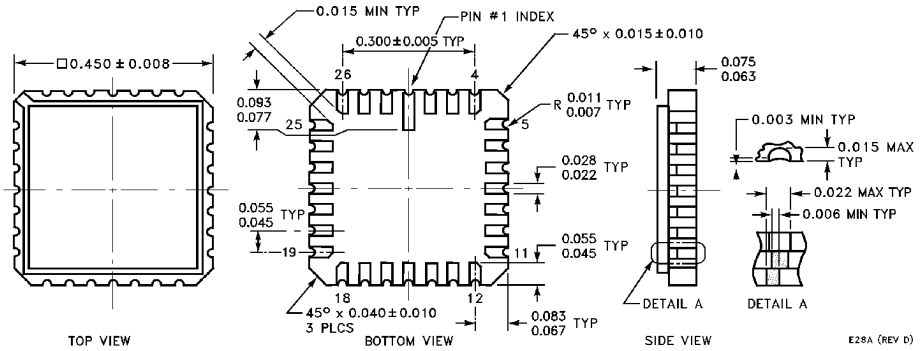

28 Lead Ceramic Leadless Chip Carrier
Package Number E28A

LIFE SUPPORT POLICY

NATIONAL'S PRODUCTS ARE NOT AUTHORIZED FOR USE AS CRITICAL COMPONENTS IN LIFE SUPPORT DEVICES OR SYSTEMS WITHOUT THE EXPRESS WRITTEN APPROVAL OF THE PRESIDENT OF NATIONAL SEMICONDUCTOR CORPORATION. As used herein:

1. Life support devices or systems are devices or systems which, (a) are intended for surgical implant into the body, or (b) support or sustain life, and whose failure to perform when properly used in accordance with instructions for use provided in the labeling, can be reasonably expected to result in a significant injury to the user.
2. A critical component in any component of a life support device or system whose failure to perform can be reasonably expected to cause the failure of the life support device or system, or to affect its safety or effectiveness.

National Semiconductor Corporation
Americas
Tel: 1-800-272-9959
Fax: 1-800-737-7018
Email: support@nsc.com

www.national.com

National Semiconductor Europe
Fax: +49 (0) 1 80-530 85 86
Email: europe.support@nsc.com
Deutsch Tel: +49 (0) 1 80-530 85 85
English Tel: +49 (0) 1 80-532 78 32
Français Tel: +49 (0) 1 80-532 93 58
Italiano Tel: +49 (0) 1 80-534 16 80

National Semiconductor Asia Pacific Customer Response Group
Tel: 65-2544466
Fax: 65-2504466
Email: sea.support@nsc.com

National Semiconductor Japan Ltd.
Tel: 81-3-5620-6175
Fax: 81-3-5620-6179

National does not assume any responsibility for use of any circuitry described, no circuit patent licenses are implied and National reserves the right at any time without notice to change said circuitry and specifications.

Powered by ICminer.com Electronic-Library Service CopyRight 2003