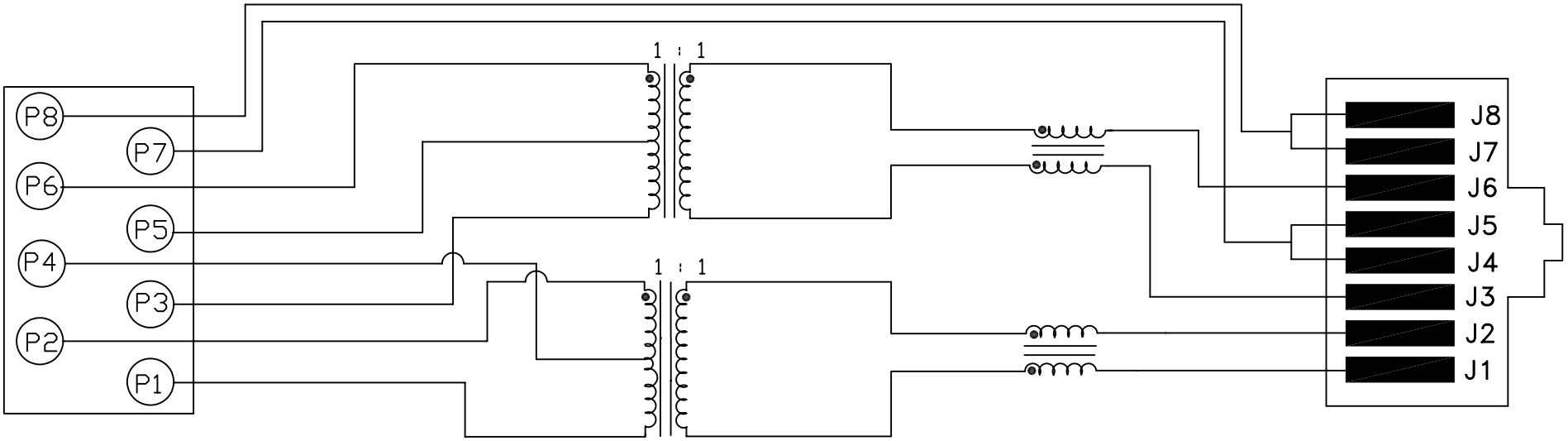

ELECTRICAL SPECIFICATIONS:

1.0 TURNS RATIO: (P3–P5–P6) : (J3–J6) : 1CT : 1CT ± 3%
(P1–P4–P2) : (J1–J2) : 1CT : 1CT ± 3%

2.0 INDUCTANCE: (P1–P2) : 350uH MIN. @ 0.1V, 100KHz, 8mA DC Bias
(P3–P6) : 350uH MIN. @ 0.1V, 100KHz, 8mA DC Bias

3.0 LEAKAGE INDUCTANCE: P6–P3 (WITH J6 AND J3 SHORT) : 0.3 MAX. @ 1MHz
P2–P1 (WITH J2 AND J1 SHORT) : 0.3 MAX. @ 1MHz

4.0 INTERWINDING CAPACITANCE: (P6,P5,P3) TO (J6,J3) : 30pf MAX @ 1MHz
(P2,P4,P1) TO (J2,J1) : 30pf MAX. @ 1MHZ

5.0 DC RESISTANCE: (J6–J3)=(J2–J1) : 1.2 ohms Max.

NOTES

1.0 PINS WITHOUT ELECTRICAL CONNECTION ARE OMITTED.

RoHS 2002/95/EC

查询"SI-60170-F"供应商

Bel Stewart Connector
11118 Susquehanna Trail, South
Glen Rock, Pa 17327-9199
717.234.7512

MagJack®

http://www.stewartconnector.com

THIS DRAWING AND THE SUBJECT MATTER SHOWN THEREON ARE CONFIDENTIAL AND PROPERTY OF BEL STEWART CONNECTOR AND SHALL NOT BE REPRODUCED, COPIED, OR USED IN ANY MANNER WITHOUT PRIOR WRITTEN CONTENT OF BEL STEWART CONNECTOR. THE SUBJECT MATTER MAY BE PATENTED OR A PATENT MAY BE PENDING.

RECEIVE

6.0 RETURN LOSS: (P6–P3)=100 OHMS AND (P1–P2)=100 OHM REF.

1MHz TO 30MHz	:	18dB MIN.
60MHz TO 80MHz	:	12dB MIN.

NOTE: 100 OHMS CONNECTED TO (J2–J1) OR (J6–J3).

7.0 DIELECTRIC WITHSTAND:

(J1, J2) TO (P1, P2)	:	1500 VAC
(J3, J6) TO (P3,P6)	:	1500 VAC

8.0 INSERTION LOSS: RS=RL=100 ohms

100KHz TO 100MHz	:	1.1 dB TYP

9.0 RISE TIME: RS=100 OHMS AND RL = 100 OHMS

OUTPUT VOLTAGE = 1 V peak	:	3.0 nS MAX
PULSE WIDTH= 112nS	:	3.0 nS MAX

10.0 CROSS TALK: 1MHz TO 100MHz : 40 dB TYP

11.0 COMMON TO COMMON MODE ATTENUATION: 30MHz TO 100MHz : 35dB TYP

查询"SI-60170-F"供应商

THIS DRAWING AND THE SUBJECT MATTER SHOWN THEREON ARE CONFIDENTIAL AND PROPERTY OF BEL STEWART CONNECTOR AND SHALL NOT BE REPRODUCED, COPIED, OR USED IN ANY MANNER WITHOUT PRIOR WRITTEN CONTENT OF BEL STEWART CONNECTOR. THE SUBJECT MATTER MAY BE PATENTED OR A PATENT MAY BE PENDING.

Bel Stewart Connector
11118 Susquehanna Trail, South
Glen Rock, Pa 17327-9199
717.234.7512
http://www.stewartconnector.com

MagJack®

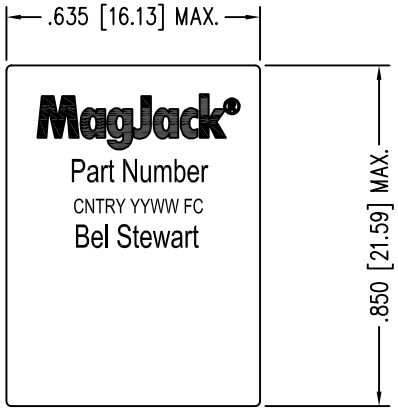

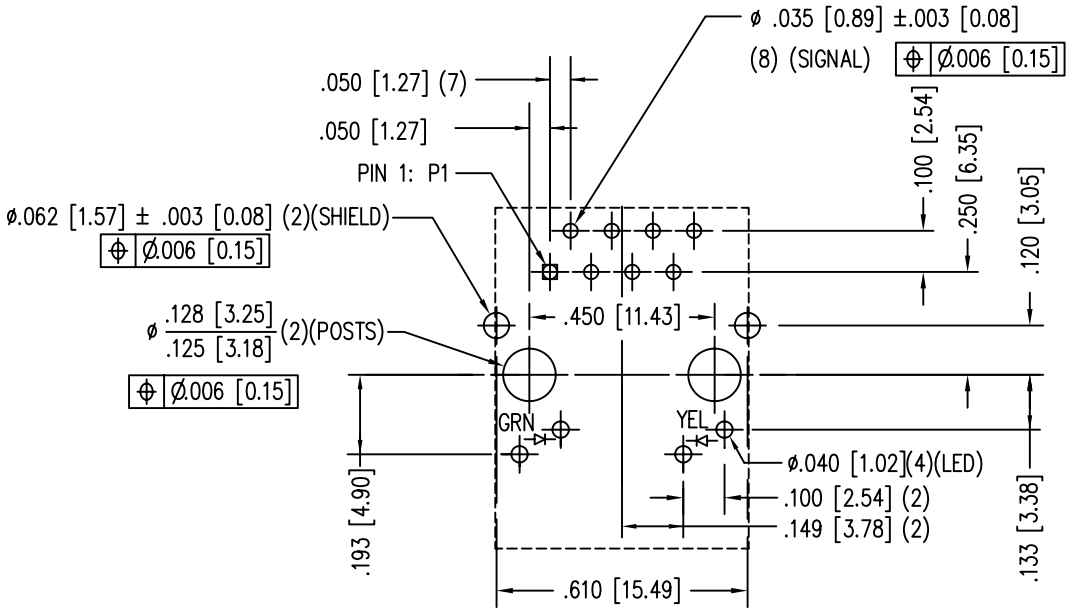

P.C.B. RECOMMENDED HOLE LAYOUT
SEEN FROM COMPONENT SIDE

ALL CENTERLINE DIMENSIONS ARE BASIC.

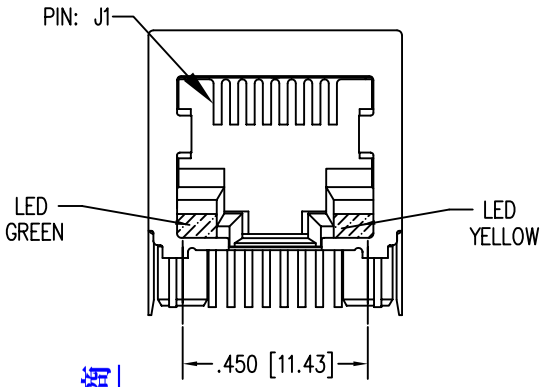

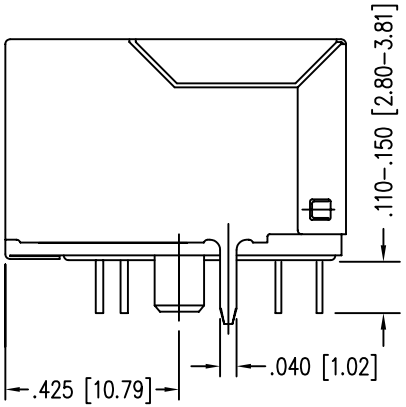

RoHS 2002/95/EC

NOTES:

1. CONNECTOR MATERIALS:
   HOUSING: THERMOPLASTIC UL94 V-0
   CONTACT/SHIELD: COPPER ALLOY
   SHIELD PLATING: NICKEL OR TIN
   CONTACT PLATING: SELECTIVE GOLD,
   50 MICRO-INCHES MIN. IN CONTACT AREA.
2. PIN NOT ELECTRICALLY CONNECTED MAYBE OMITTED.
   SEE ELECTRICAL DRAWING FOR OMITTED PINS.
3. TOLERANCES COMPLY WITH F.C.C. DIMENSION REQUIREMENTS.
4. ALL TOLERANCES NOT OTHERWISE SPECIFIED TO BE ±.005 [0.13]
5. WAVE SOLDER COMPATIBLE – PREHEAT 125°C/90SECS.
   HIGH TEMPERATURE REFLOW COMPATABLE – 230°C/90 SEC MAX.

查询"SI-60170-F"供应商

LED SPECIFICATION			
STANDARD LED	WAVELENGTH	FORWARD V (MAX)	* (TYP)
GREEN	565 nm	2.5 V	2.2 V
YELLOW	590 nm	2.5 V	2.1 V

*WITH A FORWARD CURRENT OF 20 mA (TYP)

LED POLARITY DETAIL

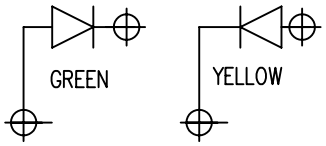

Bel Stewart Connector
11118 Susquehanna Trail, South
Glen Rock, Pa 17327-9199
717.234.7512

MagJack®
http://www.stewartconnector.com

THIS DRAWING AND THE SUBJECT MATTER SHOWN THEREON ARE CONFIDENTIAL AND PROPERTY OF BEL STEWART CONNECTOR AND SHALL NOT BE REPRODUCED, COPIED, OR USED IN ANY MANNER WITHOUT PRIOR WRITTEN CONTENT OF BEL STEWART CONNECTOR. THE SUBJECT MATTER MAY BE PATENTED OR A PATENT MAY BE PENDING.