multimec® 3F + 1D/1E/1F

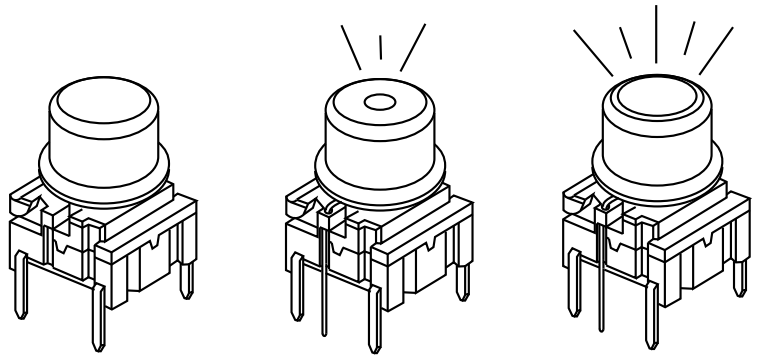

Technical Data:

- through-hole or SMD
- 50mA/24VDC
- single pole/momentary
- 10.000.000 operations life time
- IP67 sealing
- temperature range:
  low temp: -40/+65°C
  high temp: -40/+160°C

Dimensions (through-hole)

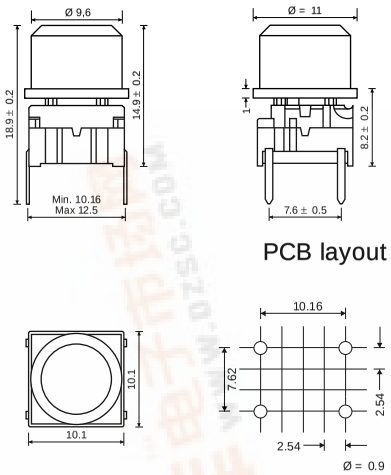

Dimensions (w/LED)

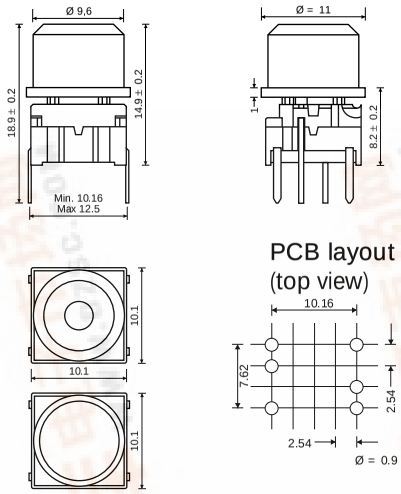

Dimensions (SMD)

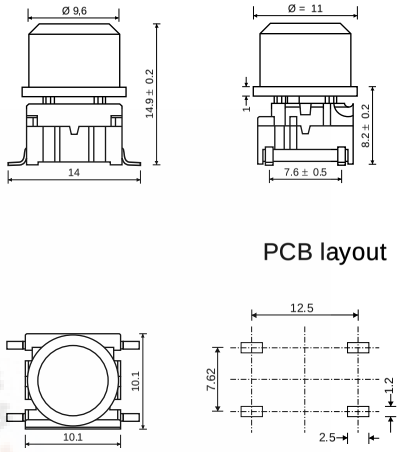

HOW TO ORDER

3 F			+	1 D	
Switch	**Mounting** **T** through-hole **S** surface mount	**L 6** low temp. **H 9** high temp.		**Cap**	**00** blue **02** green **03** grey **04** yellow **06** white **08** red **09** black

Standard versions:
3FTL6
3FTH9
3FSH9

3 F	T			+			
Switch	**Mounting** **T** through-hole	**L 6** low temp. **H 9** high temp.	**LED** **20** green **40** yellow **80** red		**Cap 1E** **Cap 1F**	**00** blue **02** green **03** grey **04** yellow **06** white **08** red **09** black	**Lens** **1** transparent **2** green **4** yellow **8** red

Standard versions:
3FTL6
3FTL6
3FTL6

查询"3FTH6"供应商

Ordering example: 3 FTL620 + 1E032

MEC · Industriparken 23 · P.O. BOX 26 · DK-2750 Ballerup · Denmark
Tel.: +45 44 97 33 66 · Fax: +45 44 68 15 14 · Web: http://www.mec.dk · E-mail: danmec@vip.cybercity.dk

找PDF 一键 pdf.dzsc.com