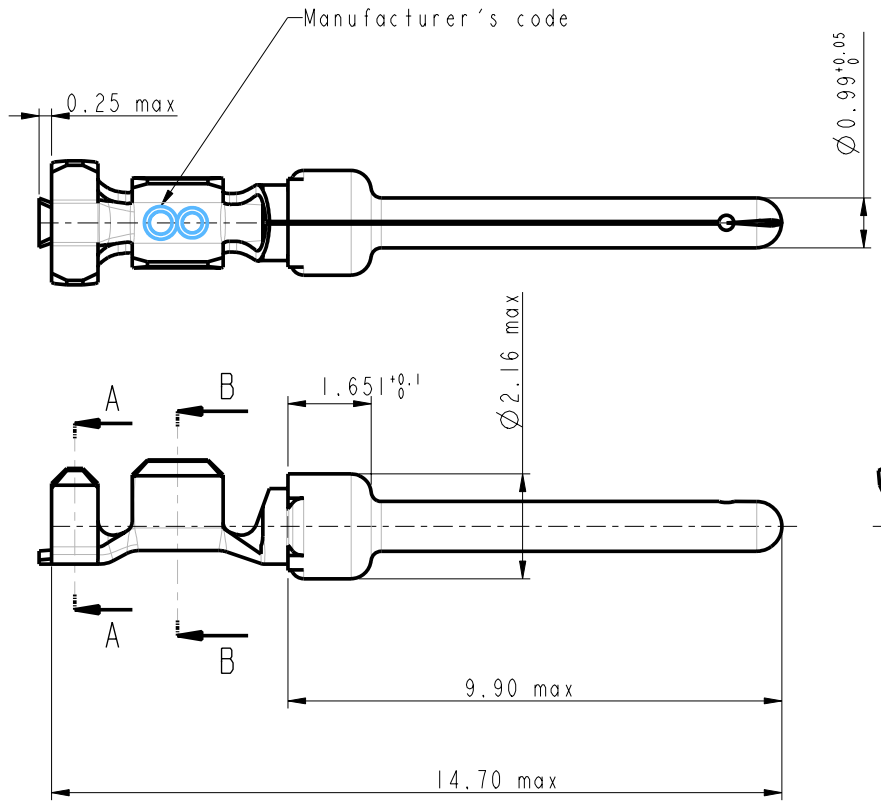

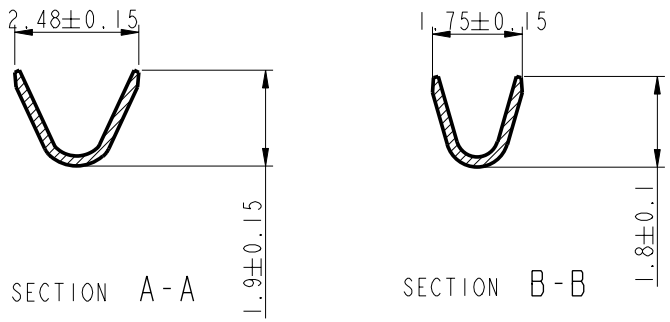

NOTES:

1-Material:brass,thickness 0.20
2-Finish on contact area:see table
finish on termination:bright tin lead over nickel
3-Wire range:20 to 24 AWG
4-Max outer dia of wire insulator:1.73 mm
5-Current carrying capacity per contact:
5.Amps max when crimped to #20 AWG
5 Amps max when crimped to #22 AWG
3 Amps max when crimped to #24 AWG
6-After 5 insertions into connector,
contact retention must be 5 pounds axial load min
7-When contact is crimped to 20 AWG,the insulation
support crimped height must be 1.78 mm max to ensure
a proper insertion into housing
6-Packaging:Box of 500 contacts

NOTE : ROHS INFORMATIONS
The LF products meet European union directives and other country regulations as described in GS-22-008
Terminations plating spec : 2um Nickel min + 2um Sn min
Packaging Spec : see GS-14-930

Core range	-
8656352064LF	Flash Au
8656352064	Flash Au
PART NUMBER	Plating

ltr	ecn no	dr	date
C	LS05-006	MPE	24/06/05
-	-	-	-
-	-	-	-
-	-	-	-
-	-	-	-
-	-	-	-
•	•	•	•

FCI www.fciconnect.com

Dr	C JARRY	28/01/97	Product family -
Eng			Spec ref
Chr			Material SEE NOTES
Appr			

surface - ✓ tolerance

projection

size A3 | Scale 10:1 | ECN

title: CRIMP PIN
#wire 20-24 in box 500 cts

dwg no: C01-8656-1523 | Rev. C

catalog no - | CUSTOMER COPY | sheet 1 of 1

PDM: Rev:C STATUS: Released Printed: Sep 28, 2005

查询"8656352064LF"供应商

Les droits strictement réservés. Reproduction ou communication à des tiers interdites sans l'accord préalable écrit de la propriétaire. Propriété de FCI. Droits de reproduction FCI.

All rights strictly reserved. Reproduction or issue to third parties is not allowed without written authority from the proprietor. Property of FCI. Copyright FCI.