THIS DRAWING IS UNPUBLISHED. RELEASED FOR PUBLICATION 20
© COPYRIGHT 20 BY TYCO ELECTRONICS CORPORATION. ALL RIGHTS RESERVED.

LOC	DIST
E	B

REVISIONS

P	LTR	DESCRIPTION	DATE	DWN	APVD
	1	FIRST ISSUE	02JAN01	RC	JJ

ITEM NO	PART NUMBER	DESCRIPTION	QTY/ ASSY
1	32186-0	TERMINAL RING TONGUE / 16-14 AWG	2
2	1337713-2	METTEX BRAIDED CABLE - 1.13mm²	A/R

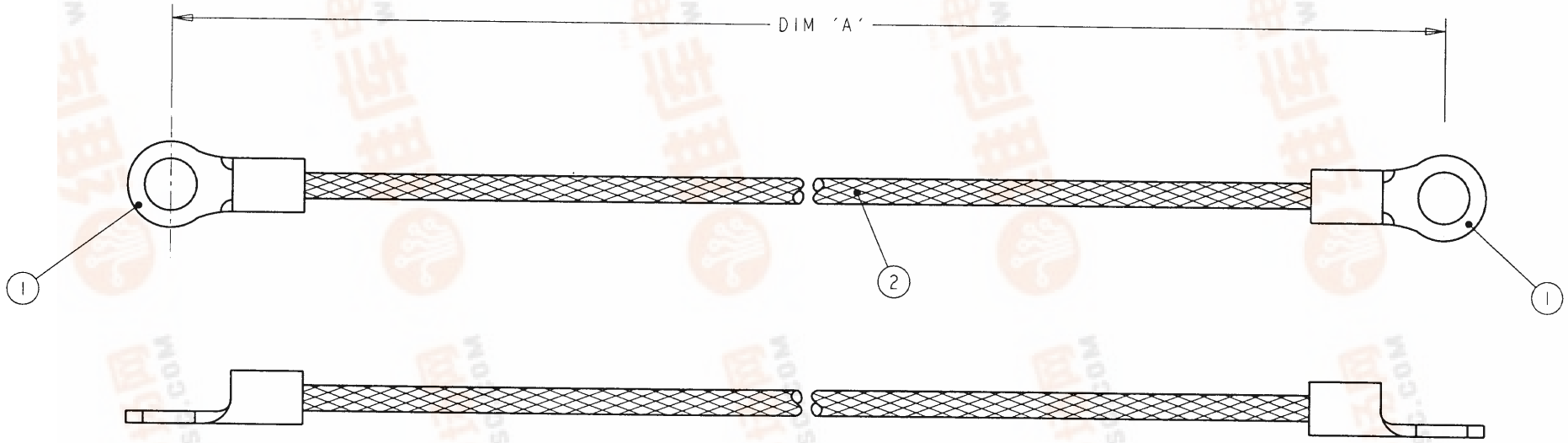

DIM 'A'	TYCO PART NUMBER
200 ±5	1337667-3
150 ±5	1337667-2
100 ±5	1337667-1

353 2872/2884/2896
查询"1337667-1"供应商

THIS DRAWING IS A CONTROLLED DOCUMENT FOR TYCO ELECTRONICS CORPORATION. IT IS SUBJECT TO CHANGE AND THE CONTROLLING ENGINEERING ORGANIZATION SHOULD BE CONTACTED FOR THE LATEST REVISION

DIMENSIONS: mm

TOLERANCES UNLESS OTHERWISE SPECIFIED:

0 PLC	±-
1 PLC	±0.1
2 PLC	±0.01
3 PLC	±0.001
4 PLC	±0.0001
ANGLES	±-

MATERIAL -

FINISH -

DWN R.CHURCHILL 02JAN2001
CHK D.CHICK 02JAN2001
APVD J. JEWELL 02JAN2001

PRODUCT SPEC -

APPLICATION SPEC -

WEIGHT -

tyco Electronics

AMP of Great Britain Ltd.
Stanmore, Middlesex, HA7 4RS.

NAME 1.13mmCSA BRAID M3.5-M3.5

SIZE A3 | CAGE CODE 00779 | DRAWING NO C-1337667 | RESTRICTED TO

CUSTOMER DRAWING

SCALE NTS | SHEET 1 OF 1 | REV

AMP 1470-19 REV 31MAR2000