查询"ACST10-7ST"供应商

ACST10

Transient protected AC power switch

Features

- Triac with overvoltage crowbar technology
- Low I_{GT} (<10 mA) or high immunity (I_{GT}<35 mA) version
- High noise immunity: static dV/dt > 2000 V/µs

Benefits

- Enables equipment to meet IEC 61000-4-5
- High off-state reliability with planar technology
- Need no external over voltage protection
- Reduces the power passive component count
- High immunity against fast transients described in IEC 61000-4-4 standards

Applications

- AC mains static switching in appliance and industrial control systems
- Drive of medium power AC loads like:
  - Universal drum motor of washing machine
  - Compressor for fridge or air conditioner

Description

The **ACST10 series** belongs to the ACS/ACST family built with the ASD (application specific discrete) technology. This high performance device is adapted to home appliances or industrial systems, and drives loads up to 10 A.

This ACST10 switch embeds a TRIAC structure and a high voltage clamping device able to absorb the inductive turn-off energy and withstand line transients such as those described in the IEC 61000-4-5 standards. The ACST10-7S needs only low gate current to be activated (I_{GT} < 10 mA) and still shows a high noise immunity complying with IEC standards such as IEC 61000-4-4 (Fast transient burst test). The ACST10-7C offers an extremely high static dV/dt immunity of 2 kV/µs minimum.

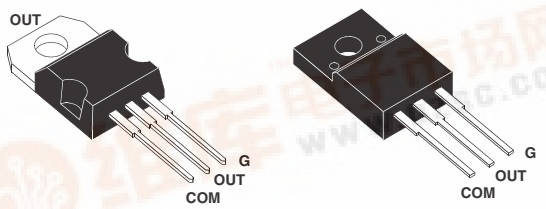

TO-220AB
ACST10-7xT

TO-220FPAB
ACST10-7xFT

Figure 1. Functional diagram

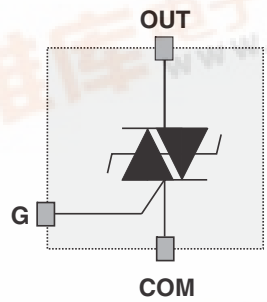

Table 1. Device summary

Symbol	Value	Unit
$I_{T(RMS)}$	10	A
V_{DRM}/V_{RRM}	700	V
I_{GT}	10 or 35	mA

pdf.dzsc.com

查询"ACST10-7ST"供应商

1 Characteristics

Table 2. Absolute ratings (limiting values)

Symbol	Parameter			Value	Unit
$I_{T(RMS)}$	On-state rms current (full sine wave)	TO-220AB	T_c = 105 °C	10	A
		TO-220FPAB	T_{amb} = 84 °C		
I_{TSM}	Non repetitive surge peak on-state current T_j initial = 25 °C, (full cycle sine wave)	F = 60 Hz	t_p = 16.7 ms	105	A
		F = 50 Hz	t_p = 20 ms	100	A
I^2t	I^2t for fuse selection		t_p = 10 ms	66	A^2s
dI/dt	Critical rate of rise on-state current $I_G = 2 \times I_{GT,}$ ($t_r \leq 100$ ns)	F = 120 Hz	T_j = 125 °C	100	A/µs
V_{PP}	Non repetitive line peak pulse voltage (1)		T_j = 25 °C	2	kV
$P_{G(AV)}$	Average gate power dissipation		T_j = 125 °C	0.1	W
P_{GM}	Peak gate power dissipation (t_p = 20 µs)		T_j = 125 °C	10	W
I_{GM}	Peak gate current (t_p = 20 µs)		T_j = 125 °C	1	A
T_{stg}	Storage temperature range			-40 to +150	°C
T_j	Operating junction temperature range			-40 to +125	°C

1. According to test described in IEC 61000-4-5 standard and *Figure 17*

Table 3. Electrical characteristics

Symbol	Test conditions	Quadrant	T_j		Value		Unit
					ACST10-7Sx	ACST10-7Cx	
I_{GT}(1)	V_{OUT} = 12 V, R_L = 33 Ω	I - II - III	25 °C	MAX.	10	35	mA
V_{GT}	V_{OUT} = 12 V, R_L = 33 Ω	I - II - III	25 °C	MAX.	1.0		V
V_{GD}	$V_{OUT} = V_{DRM}$, R_L = 3.3 Ω	I - II - III	125 °C	MIN.	0.2		V
I_H(2)	I_{OUT} = 500 mA		25 °C	MAX.	30	50	mA
I_L	$I_G = 1.2 \times I_{GT}$	I - II - III	25 °C	MAX.	50	70	mA
dV/dt(2)	V_{OUT} = 67 % V_{DRM}, gate open		125 °C	MIN.	200	2000	V/µs
(dI/dt)c(2)	(dV/dt)c = 15 V/µs		125 °C	MIN.	4.4		A/ms
	Without snubber					12	
V_{CL}	I_{CL} = 0.1 mA, t_p = 1 ms		25 °C	MIN.	850		V

1. Minimum I_{GT} is guaranteed at 5% of I_{GT} max
2. For both polarities of OUT pin referenced to COM pin

查询"A0SA10-7ST10-7ST"供应商

Table 4. Static characteristics

Symbol	Test conditions			Value	Unit
V_{TM}(1)	I_{OUT} = 14.1 A, t_p = 500 µs	T_j = 25 °C	MAX.	1.5	V
V_{T0}(1)	Threshold voltage	T_j = 125 °C	MAX.	0.9	V
R_d(1)	Dynamic resistance	T_j = 125 °C	MAX.	35	mΩ
I_{DRM} I_{RRM}	V_{OUT} = V_{DRM}/ V_{RRM}	T_j = 25 °C	MAX.	20	µA
		T_j = 125 °C	MAX.	1.2	mA

1. For both polarities of OUT pin referenced to COM pin

Table 5. Thermal characteristics

Symbol	Parameter		Value	Unit
$R_{th(j-c)}$	Junction to case (AC)	TO-220AB	1.7	°C/W
		TO-220FPAB	3.5	°C/W
$R_{th(j-a)}$	Junction to ambient	TO-220AB TO-220FPAB	60	°C/W

查询"ACST10-7ST"供应商

Figure 2. Maximum power dissipation vs. rms on-state current (full cycle)

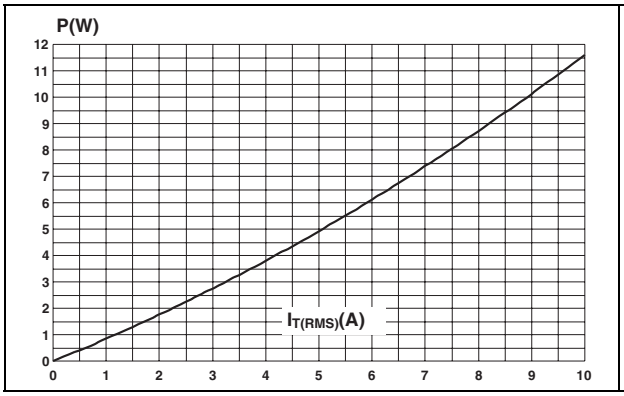

Figure 3. On-state rms current vs. case temperature (full cycle)

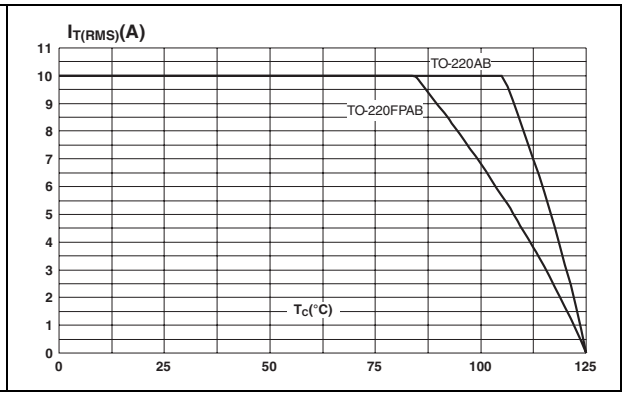

Figure 4. On-state rms current vs. ambient temperature (free air convection full cycle)

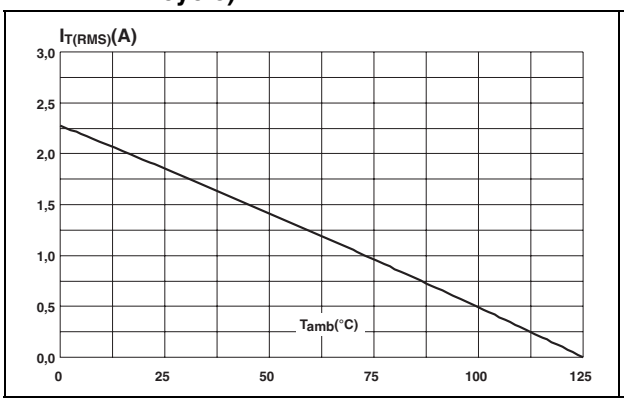

Figure 5. Relative variation of thermal impedance vs. pulse duration

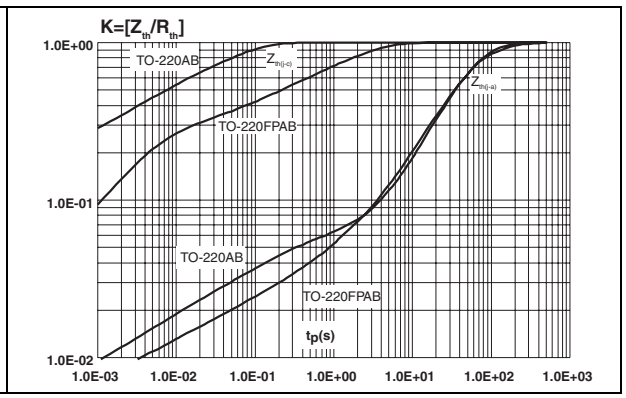

Figure 6. On-state characteristics (maximal values)

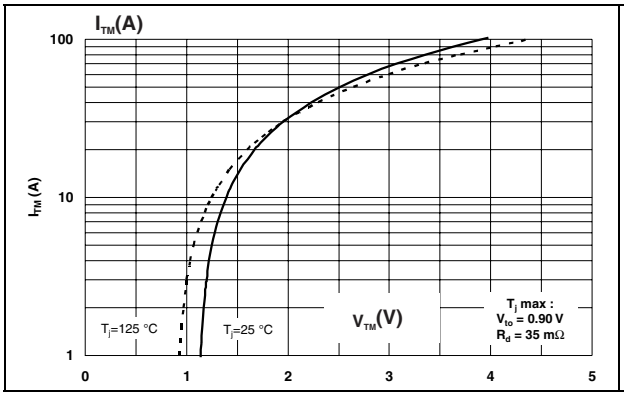

Figure 7. Non repetitive surge peak on-state current vs. number of cycles (T_j initial = 25 °C)

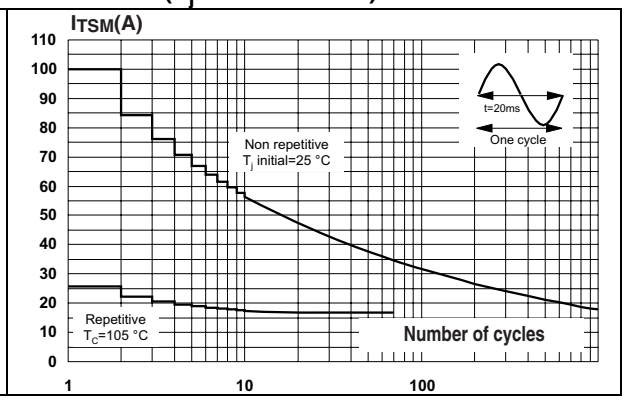

Figure 8. Non repetitive surge peak on-state current for a sinusoidal pulse and corresponding value of I²t

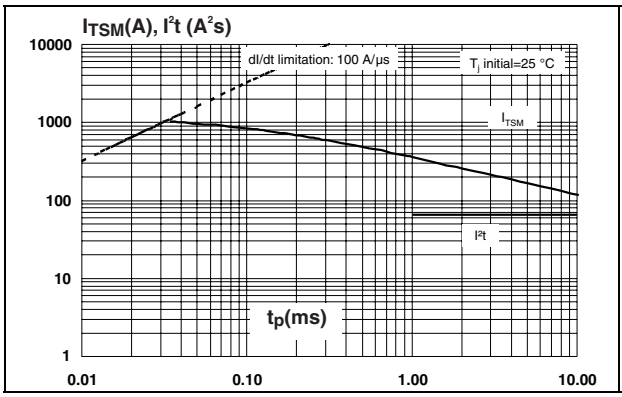

Figure 9. Relative variation of gate triggering current (I_{GT}) and gate triggering voltage vs. junction temperature

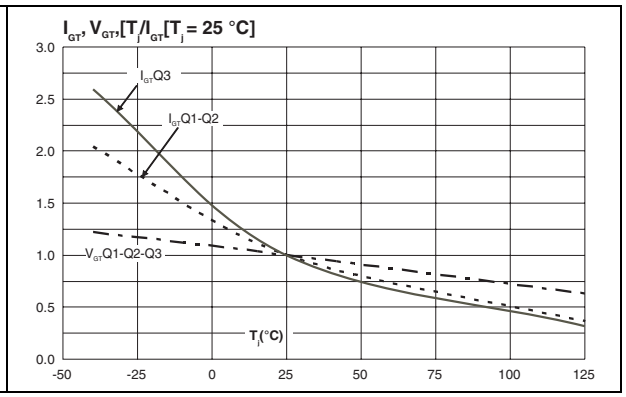

Figure 10. Relative variation of holding (I_H) and latching current (I_L) vs. junction temperature

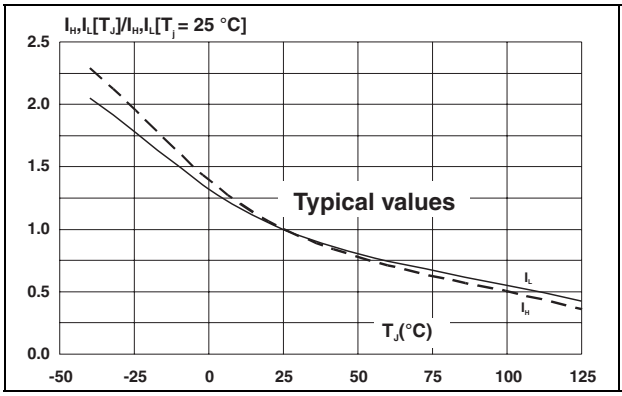

Figure 11. Relative variation of critical rate of decrease of main current (di/dt)c vs. (dV/dt)c

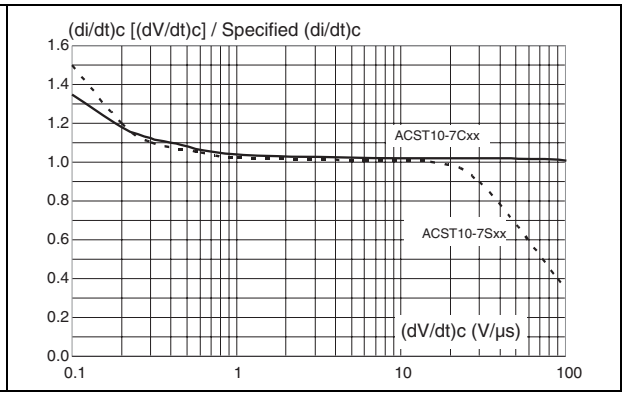

Figure 12. Relative variation of critical rate of decrease of main current (di/dt)c vs. junction temperature

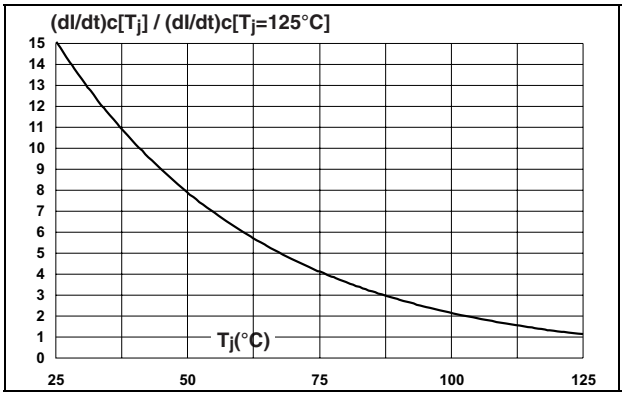

Figure 13. Relative variation of static dV/dt vs. junction temperature

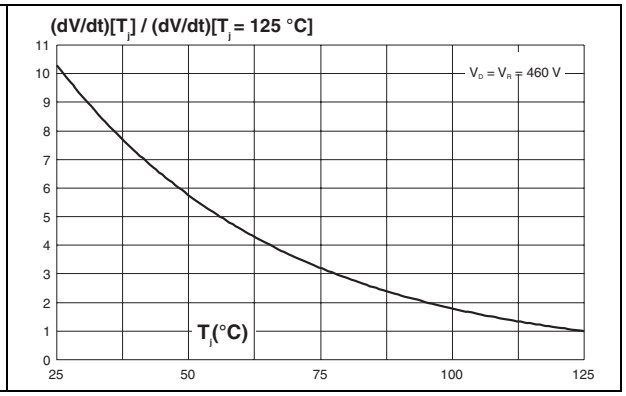

查询"ACST10-7ST"供应商

Figure 14. Relative variation of maximum clamping voltage, V_{CL} vs. junction temperature

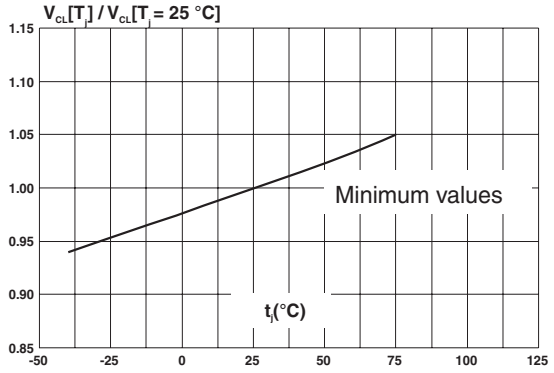

2 Application information

2.1 Typical application description

The ACST10 device has been designed to control medium power load, such as AC motors in home appliances. Thanks to its thermal and turn off commutation performances, the ACST10 switch is able to drive, with no turn off additional snubber, an inductive load up to 10 A. It also provides high thermal performances in static and transient modes such as the compressor inrush current or high torque operating conditions of an AC motor. Thanks to its low gate triggering current level, the ACST10-7S can be driven directly by an MCU through a simple gate resistor as shown *Figure 15*.

Figure 15. Compressor control – typical diagram

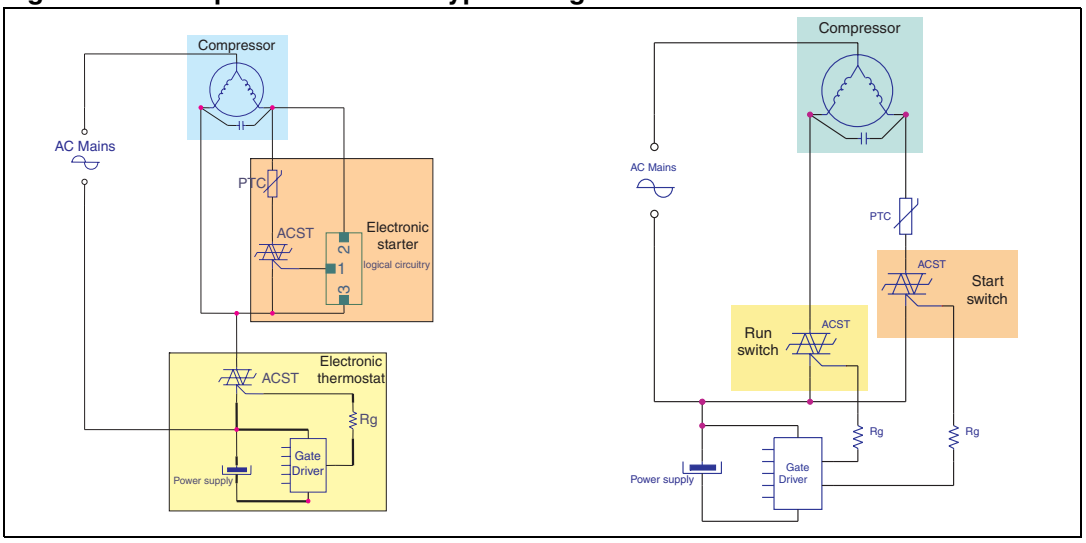

Figure 16. Universal drum motor control – typical diagram

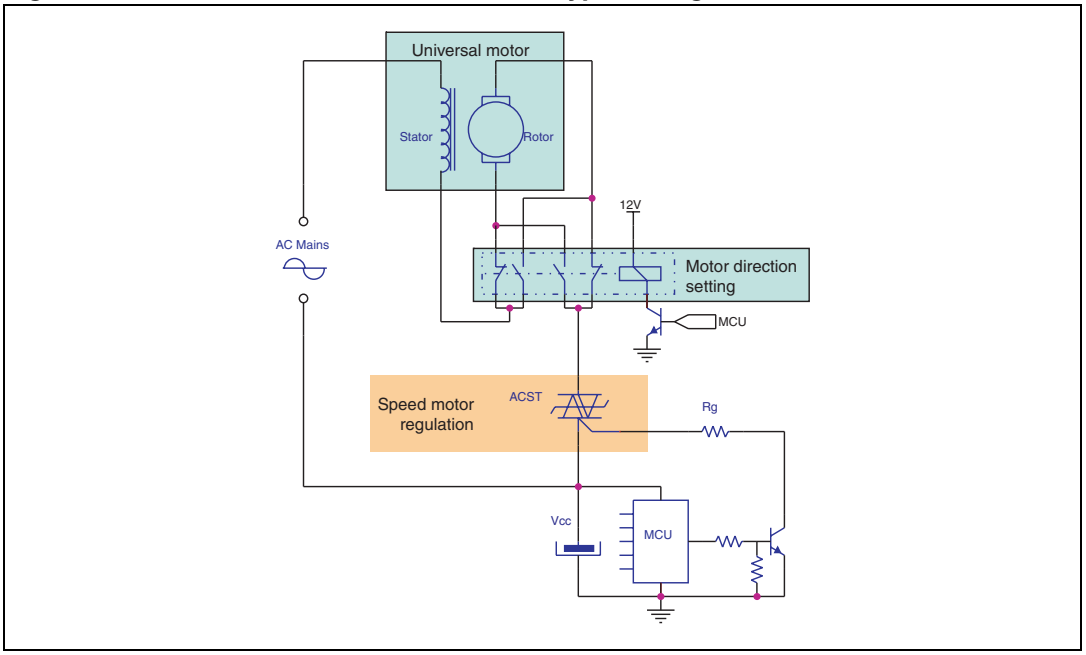

查询"ACST10-7ST"供应商

2.2 AC line transient voltage ruggedness

In comparison with standard TRIACs, which are not robust against surge voltage, the ACST10 is self-protected against over-voltage, specified by the new parameter V_{CL}. The ACST10 switch can safely withstand AC line transient voltages either by clamping the low energy spikes or by switching to the on state (for less than 10 ms) to dissipate higher energy shocks through the load. This safety feature works even with high turn-on current rises.

The test circuit of *Figure 17* represents the ACST10 application, and is used to stress the ACST switch according to the IEC 61000-4-5 standard conditions. Thanks to the load which is limiting the current, the ACST switch withstands the voltage spikes up to 2 kV above the peak line voltage. The protection is based on an overvoltage crowbar technology. The ACST10 switches safely to the on state as shown in *Figure 18*. The ACST10 recovers its blocking voltage capability after the surge. Such a non repetitive test can be done at least 10 times on each AC line voltage polarity.

Figure 17. Overvoltage ruggedness test circuit for resistive and inductive loads for IEC 61000-4-5 standards

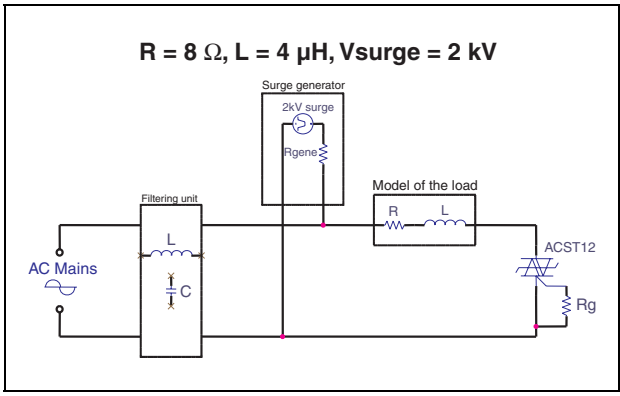

Figure 18. Typical current and voltage waveforms across the ACST10 during IEC 61000-4-5 standard test

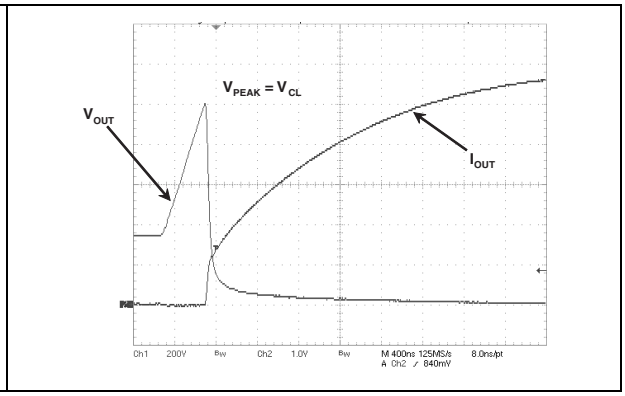

3 Ordering information scheme

Figure 19. Ordering information scheme

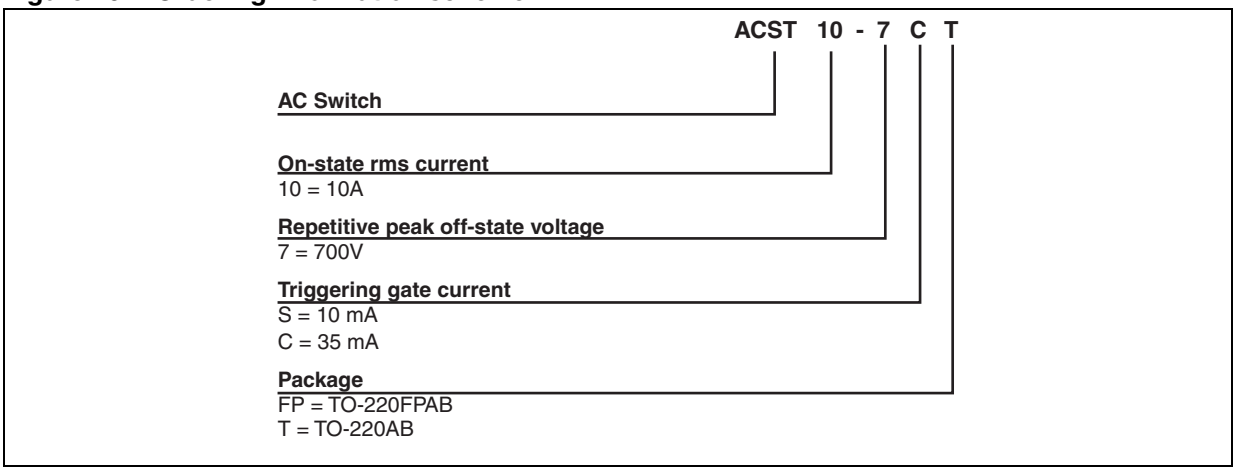

查询"AGST10-7ST"供应商

4 Package information

- Epoxy meets UL94, V0
- Recommended torque: 0.4 to 0.6 N·m

In order to meet environmental requirements, ST offers these devices in ECOPACK® packages. These packages have a lead-free second level interconnect. The category of second level interconnect is marked on the package and on the inner box label, in compliance with JEDEC Standard JESD97. The maximum ratings related to soldering conditions are also marked on the inner box label. ECOPACK is an ST trademark. ECOPACK specifications are available at *www.st.com*.

Table 6. TO-220AB dimensions

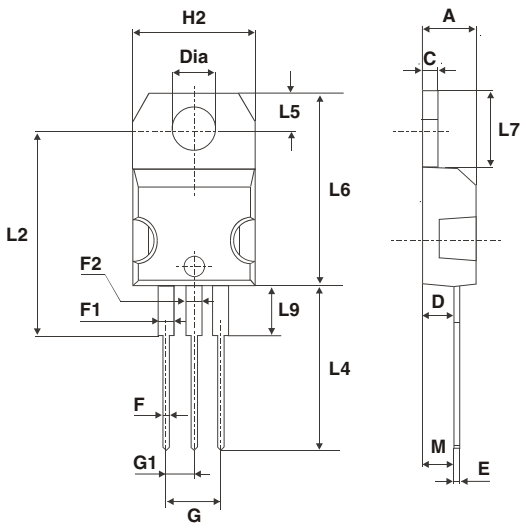

Ref.	Dimensions			
	Millimeters		Inches	
	Min.	Max.	Min.	Max.
A	4.40	4.60	0.173	0.181
C	1.23	1.32	0.048	0.051
D	2.40	2.72	0.094	0.107
E	0.49	0.70	0.019	0.027
F	0.61	0.88	0.024	0.034
F1	1.14	1.70	0.044	0.066
F2	1.14	1.70	0.044	0.066
G	4.95	5.15	0.194	0.202
G1	2.40	2.70	0.094	0.106
H2	10	10.40	0.393	0.409
L2	16.4 typ.		0.645 typ.	
L4	13	14	0.511	0.551
L5	2.65	2.95	0.104	0.116
L6	15.25	15.75	0.600	0.620
L7	6.20	6.60	0.244	0.259
L9	3.50	3.93	0.137	0.154
M	2.6 typ.		0.102 typ.	
Diam.	3.75	3.85	0.147	0.151

Table 7. TO-220FPAB dimensions

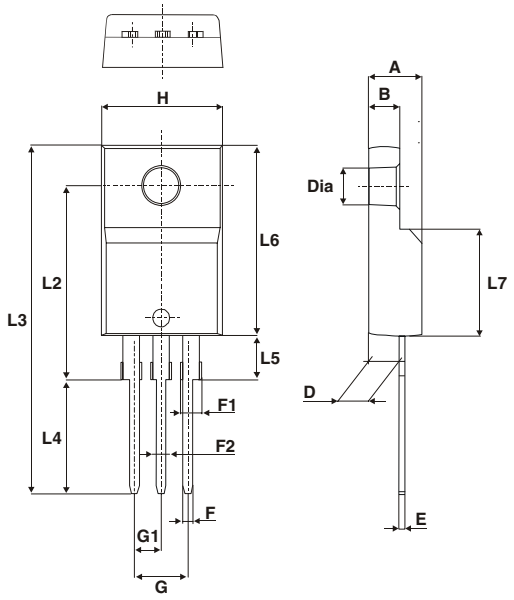

Ref.	Dimensions			
	Millimeters		Inches	
	Min.	Max.	Min.	Max.
A	4.4	4.6	0.173	0.181
B	2.5	2.7	0.098	0.106
D	2.5	2.75	0.098	0.108
E	0.45	0.70	0.018	0.027
F	0.75	1	0.030	0.039
F1	1.15	1.50	0.045	0.059
F2	1.15	1.50	0.045	0.059
G	4.95	5.20	0.195	0.205
G1	2.4	2.7	0.094	0.106
H	10	10.4	0.393	0.409
L2	16 Typ.		0.63 Typ.	
L3	28.6	30.6	1.126	1.205
L4	9.8	10.6	0.386	0.417
L5	2.9	3.6	0.114	0.142
L6	15.9	16.4	0.626	0.646
L7	9.00	9.30	0.354	0.366
Diam.	3.00	3.20	0.118	0.126

查询"ACST10-7ST"供应商

5 Ordering information

Table 8. Ordering information

Order code	Marking	Package	Weight	Base qty	Packing mode
ACST10-7ST	ACST107S	TO-220AB	2.3 g	50	Tube
ACST10-7SFP		TO-220FPAB	2.3 g	50	Tube
ACST10-7CT	ACST107C	TO-220AB	2.3 g	50	Tube
ACST10-7CFP		TO-220FPAB	2.3 g	50	Tube

6 Revision history

Table 9. Document revision history

Date	Revision	Changes
02-Dec-2008	1	First issue

Please Read Carefully:

Information in this document is provided solely in connection with ST products. STMicroelectronics NV and its subsidiaries (“ST”) reserve the right to make changes, corrections, modifications or improvements, to this document, and the products and services described herein at any time, without notice.

All ST products are sold pursuant to ST’s terms and conditions of sale.

Purchasers are solely responsible for the choice, selection and use of the ST products and services described herein, and ST assumes no liability whatsoever relating to the choice, selection or use of the ST products and services described herein.

No license, express or implied, by estoppel or otherwise, to any intellectual property rights is granted under this document. If any part of this document refers to any third party products or services it shall not be deemed a license grant by ST for the use of such third party products or services, or any intellectual property contained therein or considered as a warranty covering the use in any manner whatsoever of such third party products or services or any intellectual property contained therein.

UNLESS OTHERWISE SET FORTH IN ST’S TERMS AND CONDITIONS OF SALE ST DISCLAIMS ANY EXPRESS OR IMPLIED WARRANTY WITH RESPECT TO THE USE AND/OR SALE OF ST PRODUCTS INCLUDING WITHOUT LIMITATION IMPLIED WARRANTIES OF MERCHANTABILITY, FITNESS FOR A PARTICULAR PURPOSE (AND THEIR EQUIVALENTS UNDER THE LAWS OF ANY JURISDICTION), OR INFRINGEMENT OF ANY PATENT, COPYRIGHT OR OTHER INTELLECTUAL PROPERTY RIGHT.

UNLESS EXPRESSLY APPROVED IN WRITING BY AN AUTHORIZED ST REPRESENTATIVE, ST PRODUCTS ARE NOT RECOMMENDED, AUTHORIZED OR WARRANTED FOR USE IN MILITARY, AIR CRAFT, SPACE, LIFE SAVING, OR LIFE SUSTAINING APPLICATIONS, NOR IN PRODUCTS OR SYSTEMS WHERE FAILURE OR MALFUNCTION MAY RESULT IN PERSONAL INJURY, DEATH, OR SEVERE PROPERTY OR ENVIRONMENTAL DAMAGE. ST PRODUCTS WHICH ARE NOT SPECIFIED AS "AUTOMOTIVE GRADE" MAY ONLY BE USED IN AUTOMOTIVE APPLICATIONS AT USER’S OWN RISK.

Resale of ST products with provisions different from the statements and/or technical features set forth in this document shall immediately void any warranty granted by ST for the ST product or service described herein and shall not create or extend in any manner whatsoever, any liability of ST.

ST and the ST logo are trademarks or registered trademarks of ST in various countries.

Information in this document supersedes and replaces all information previously supplied.

The ST logo is a registered trademark of STMicroelectronics. All other names are the property of their respective owners.

© 2008 STMicroelectronics - All rights reserved

STMicroelectronics group of companies

Australia - Belgium - Brazil - Canada - China - Czech Republic - Finland - France - Germany - Hong Kong - India - Israel - Italy - Japan - Malaysia - Malta - Morocco - Singapore - Spain - Sweden - Switzerland - United Kingdom - United States of America

www.st.com