REVISION			
REV.	DESCRIPTION	DATE	APPROVED

查询"1321002-03"供应商

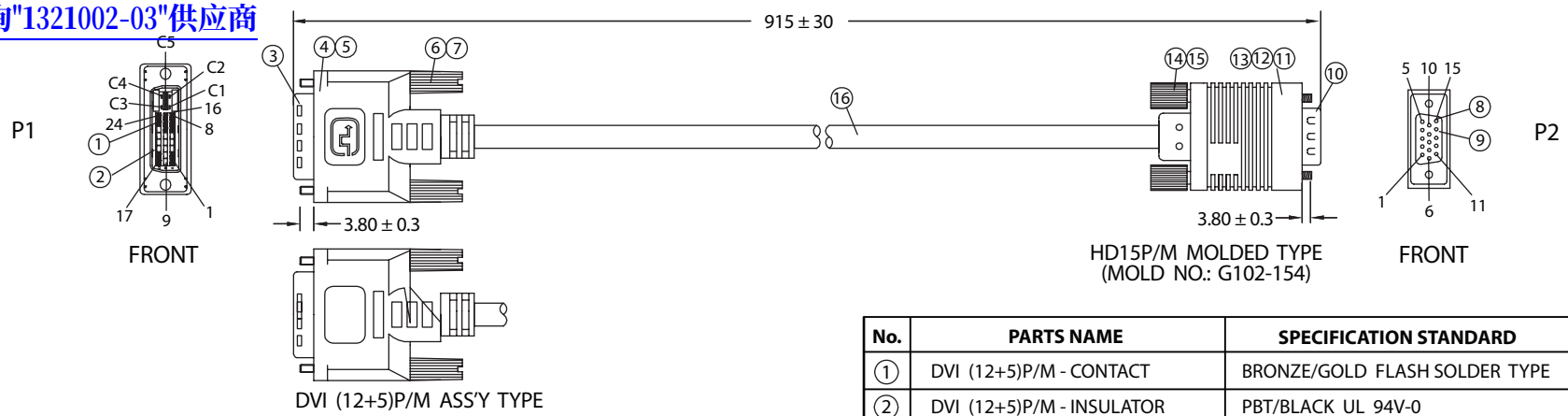

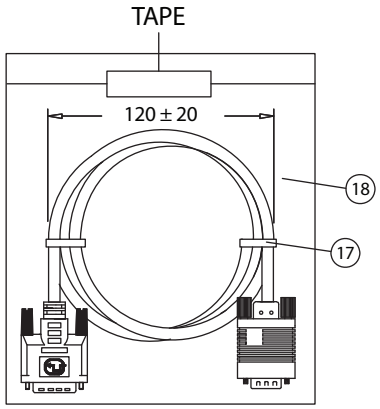

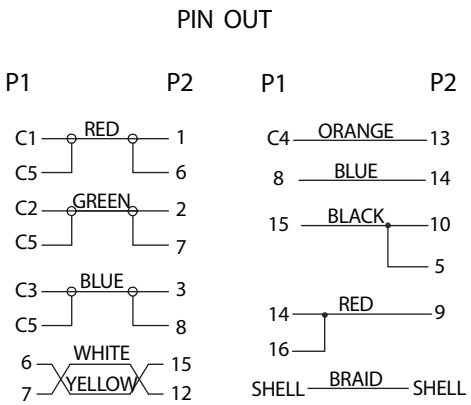

No.	PARTS NAME	SPECIFICATION STANDARD	QTY	
①	DVI (12+5)P/M - CONTACT	BRONZE/GOLD FLASH SOLDER TYPE	17	
②	DVI (12+5)P/M - INSULATOR	PBT/BLACK UL 94V-0	1	
③	DVI (12+5)P/M - SHELL	STEEL NICKEL PLATED	1	
④	DVI (12+5)P/M - CAN	STEEL TIN PLATED	1	
⑤	DVI (12+5)P/M - COVER	45P PVC/COLOR: BEIGE	1	
⑥	THUMB SCREW	#4-40 2.8x45, NICKEL PLATED	2	
⑦	SCREW MOLD	35P PVC/COLOR: BLACK	2	
⑧	HD15P/M - CONTACT	BRASS GOLD FLASH SOLDER TYPE	15	
⑨	HD15P/M - INSULATOR	PBT/BLACK UL 94V-0	1	
⑩	HD15P/M - SHELL	STEEL NICKEL PLATED	1	
⑪	HD15P/M - INNER MOLD	PE NATURAL	1	
⑫	HD15P/M - COPPER FOIL	WIDTH: 28mm	1	
⑬	HD15P/M - OUTER MOLD	45P PVC/COLOR: BEIGE	1	
⑭	HD15P/M - THUMB SCREW	UNC #4-40 ∅4xL50, NICKEL PLATED	2	
⑮	HD15P/M - SCREW MOLD	35P PVC/COLOR: BLACK	2	
⑯	CABLE DVI 12+5 UL20276	L03010ABK01A	1	
⑰	MINI TIE	PE/BLACK	2	
⑱	POLYBAG	PE/0.8x160x200mm	1	

NOTES:

1. CABLE: UL20276
   (28AWGxSP+FOIL)x3C+28AWGx4C+28AWGx1P+MYLAR+FOIL+BD
   OUTER JACKET: BEIGE, OD: 6.5 ± 0.2mm
   PRINTING: "E166307 AWM 20276 28AWG 80°C 30V VW-1
   LOW VOLTAGE COMPUTER CABLE"
2. CONNECTORS: DVI (12+5)P/M-HD15P/M
3. HOOD: ASS'Y TYPE & MOLDED TYPE
4. ELECTRICAL TEST:
   <1>.100% OPEN SHORT & MISS WIRE TEST
   <2>.INSULATION RESISTANCE: DC400V 10M ohm MIN.
   <3>.CONDUCTOR RESISTANCE: 3 ohm MAX.
5. PACKING: 1PC/POLYBAG

Dim range (mm)	Tolerance +/- (mm)
0-1	0.15
1-6	0.20
6-18	0.30
18-50	0.50
50-120	0.70
120-250	0.90
250-500	1.20

Qualtek Electronics Corp.
WCI DIVISION

Part Number: 1321002-03 RoHS Compliant

Description: DVI (12+5)P/M - HD15P/M

Drawn / Date	Checked / Date	Approved / Date
B. Grubb 01-24-07	01-24-07	JJH / 01-24-07