查询"496R8C"供应商

Murata Power Solutions

4900 Series

Shielded Dual Winding Surface Mount Inductors

FEATURES

- RoHS compliant
- 2.2μH to 880μH[1]
- Up to 9.5A I_{DC}
- Bobbin format
- Dual winding
- Surface mount
- Integral EMI shield
- Compact size
- Tape and reel packaging
- No voltage breakdown at 500V_{DC}
- J-STD-020C reflow
- Backward compatible with Sn/Pb soldering systems

DESCRIPTION

The 4900 series is a range of dual wound inductors offering flexible options. Windings have a 1:1 ratio and can be connected in series or parallel to create a wide range of inductance combinations. The secondary winding could be used as a feedback winding in switched mode power supplies.

PIN CONNECTIONS (TOP VIEW)

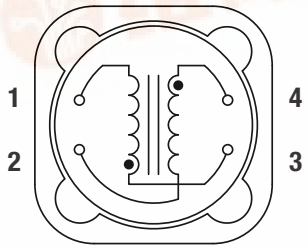

3 & 1 = Primary winding
4 & 2 = Secondary winding

RoHS COMPLIANT 2002/95/EC

For full details go to
www.murata-ps.com/rohs

SELECTION GUIDE

Order Code	Inductance[1] (10kHz, 100mVAC) 1&3, 2&4	Inductance Range (10kHz, 100mVAC) 1&3, 2&4	DC Current[2] (parallel connection)	DC Resistance
	Nom.	Min. - Max.	Max.	Max.
	μH	μH	A	mΩ
492R2C	2.2	1.77 - 2.65	9.50	12.6
493R3C	3.3	2.47 - 3.70	7.80	14.9
494R7C	4.7	3.29 - 4.93	6.50	17.1
496R8C	6.8	5.27 - 7.91	5.40	27.0
49100C	10	7.70 - 11.6	4.50	41.0
49150C	15	10.6 - 16.0	3.70	53.0
49220C	22	15.9 - 23.8	3.00	81.0
49330C	33	24.5 - 36.8	2.50	128
49470C	47	35.1 - 52.6	2.10	191
49680C	68	50.8 - 76.2	1.71	233
49101C	100	73.6 - 110	1.41	343
49151C	150	111 - 166	1.15	529
49221C	220	167 - 251	0.95	805

MECHANICAL DIMENSIONS

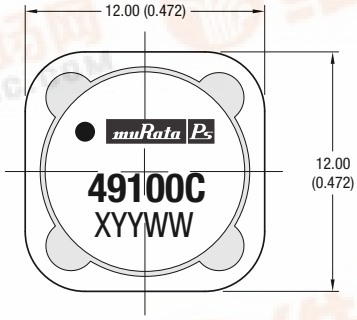

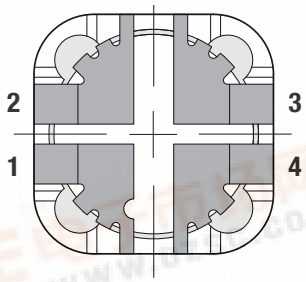

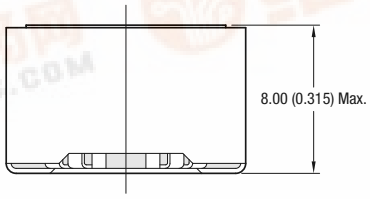

Recommended Footprint Details

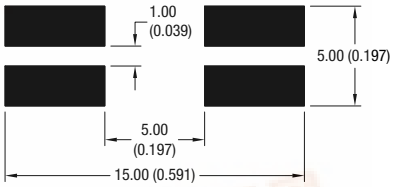

All dimensions in mm (inches). Package weight: 4g Typ.

ABSOLUTE MAXIMUM RATINGS

Isolation voltage (flash tested for 1 second), pins 3 & 4	500V_{DC}
Operating free air temperature range	-40°C to 85°C
Storage temperature range	-40°C to 125°C

SOLDERING INFORMATION[3]

Peak reflow temperature	245°C
Pin finish	Tin

Specifications typical at T_A = 25°C

1 When connecting windings in series, inductance will be 4 times the nominal figure shown.
2 If current is flowing in both windings, the maximum DC current occurs when either the inductance falls to 75% of its nominal value or when its temperature rise reaches 40°C, whichever is sooner.
3 For further information, please visit www.murata-ps.com/rohs

pdf.dzsc.com

TAPE & REEL SPECIFICATIONS

REEL OUTLINE DIMENSIONS

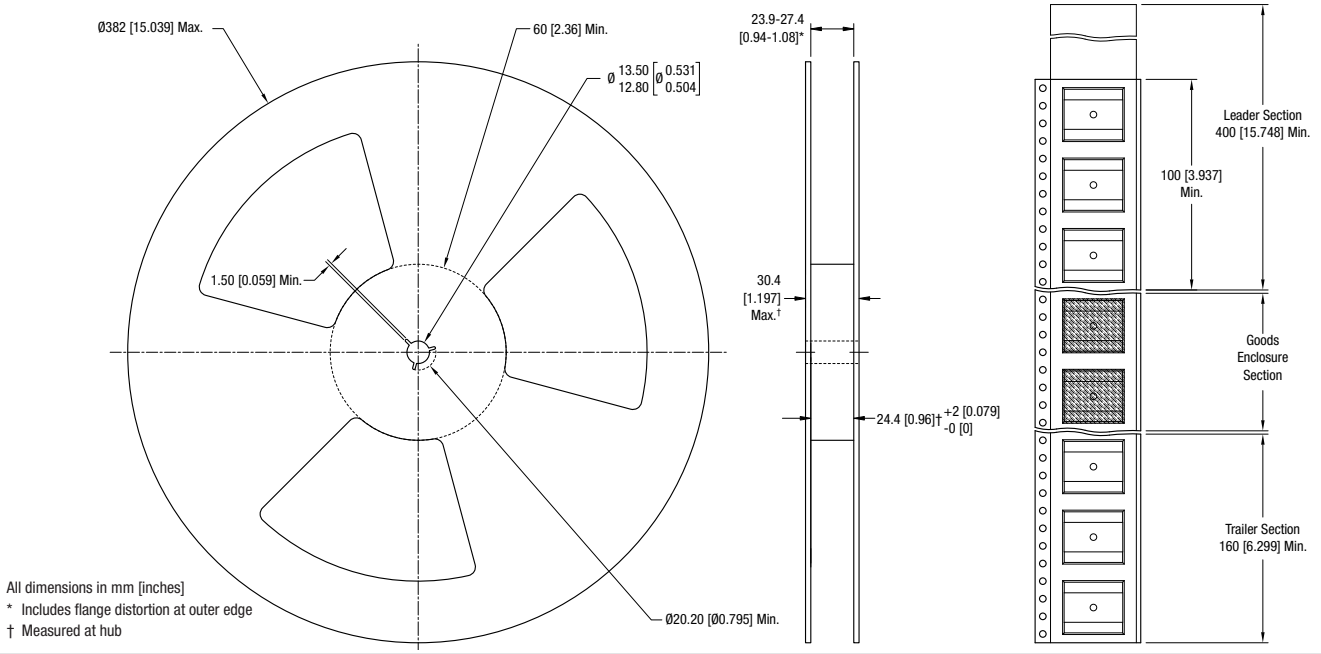

All dimensions in mm [inches]
* Includes flange distortion at outer edge
† Measured at hub

TAPE OUTLINE DIMENSIONS

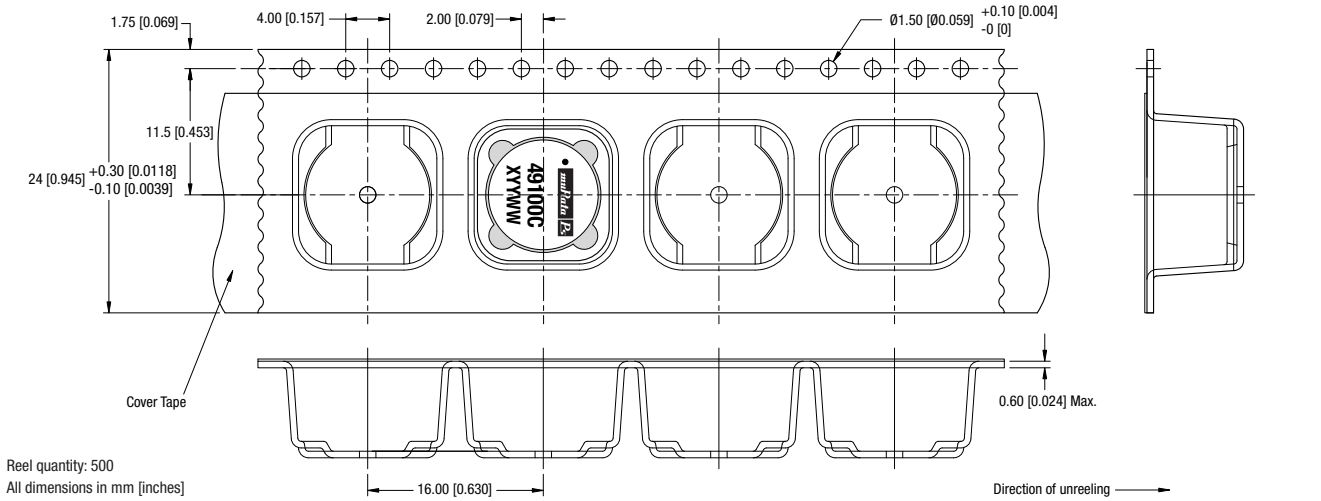

Reel quantity: 500
All dimensions in mm [inches]

Murata Power Solutions

Murata Power Solutions, Inc.
11 Cabot Boulevard, Mansfield, MA 02048-1151 U.S.A.
Tel: (508) 339-3000 (800) 233-2765 Fax: (508) 339-6356
www.murata-ps.com email: sales@murata-ps.com ISO 9001 REGISTERED

Murata Power Solutions, Inc. makes no representation that the use of its products in the circuits described herein, or the use of other technical information contained herein, will not infringe upon existing or future patent rights. The descriptions contained herein do not imply the granting of licenses to make, use, or sell equipment constructed in accordance therewith. Specifications are subject to change without notice.
© 2008 Murata Power Solutions, Inc.

USA: Mansfield (MA), Tel: (800) 233 2765, email: sales@murata-ps.com
Canada: Toronto, Tel: (866) 740 1232, email: toronto@murata-ps.com
UK: Milton Keynes, Tel: +44 (0)1908 615232, email: mk@murata-ps.com
France: Montigny Le Bretonneux, Tel: +33 (0)1 34 60 01 01, email: france@murata-ps.com
Germany: München, Tel: +49 (0)89-544334-0, email: ped.munich@murata-ps.com
Japan: Tokyo, Tel: 3-3779-1031, email: sales_tokyo@murata-ps.com
Osaka, Tel: 6-6354-2025, email: sales_osaka@murata-ps.com
Website: www.murata-ps.jp
China: Shanghai, Tel: +86 215 027 3678, email: shanghai@murata-ps.com
Guangzhou, Tel: +86 208 221 8066, email: guangzhou@murata-ps.com