查询"CS5341-CZZR"供应商

CS5341

# 105 dB, 192 kHz, Multi-Bit Audio A/D Converter

## Features

- Advanced Multi-bit Delta-Sigma Architecture
- 24-bit Conversion
- Supports All Audio Sample Rates Including 192 kHz
- 105 dB Dynamic Range at 5 V
- -98 dB THD+N
- 90 mW Power Consumption
- High-Pass Filter to Remove DC Offsets
- Analog/Digital Core Supplies from 3.3 V to 5 V
- Supports Logic Levels between 1.8 V and 5 V
- Auto-Detect Mode Selection in Slave Mode
- Auto-Detect MCLK Divider

## General Description

The CS5341 is a complete analog-to-digital converter for digital audio systems. It performs sampling, analog-to-digital conversion, and anti-alias filtering, generating 24-bit values for both left and right inputs in serial form at sample rates up to 200 kHz per channel.

The CS5341 uses a 5th-order, multi-bit Delta-Sigma modulator followed by digital filtering and decimation, which removes the need for an external anti-alias filter.

The CS5341 is available in a 16-pin TSSOP package for Commercial (-10° to +70° C) and Automotive grades (-40° to +85° C). The CDB5341 Customer Demonstration Board is also available for device evaluation and implementation suggestions. Please refer to "Ordering Information" on page 22 for complete ordering information.

The CS5341 is ideal for audio systems requiring wide dynamic range, negligible distortion and low noise, such as set-top boxes, DVD-karaoke players, DVD recorders, A/V receivers, and automotive applications.

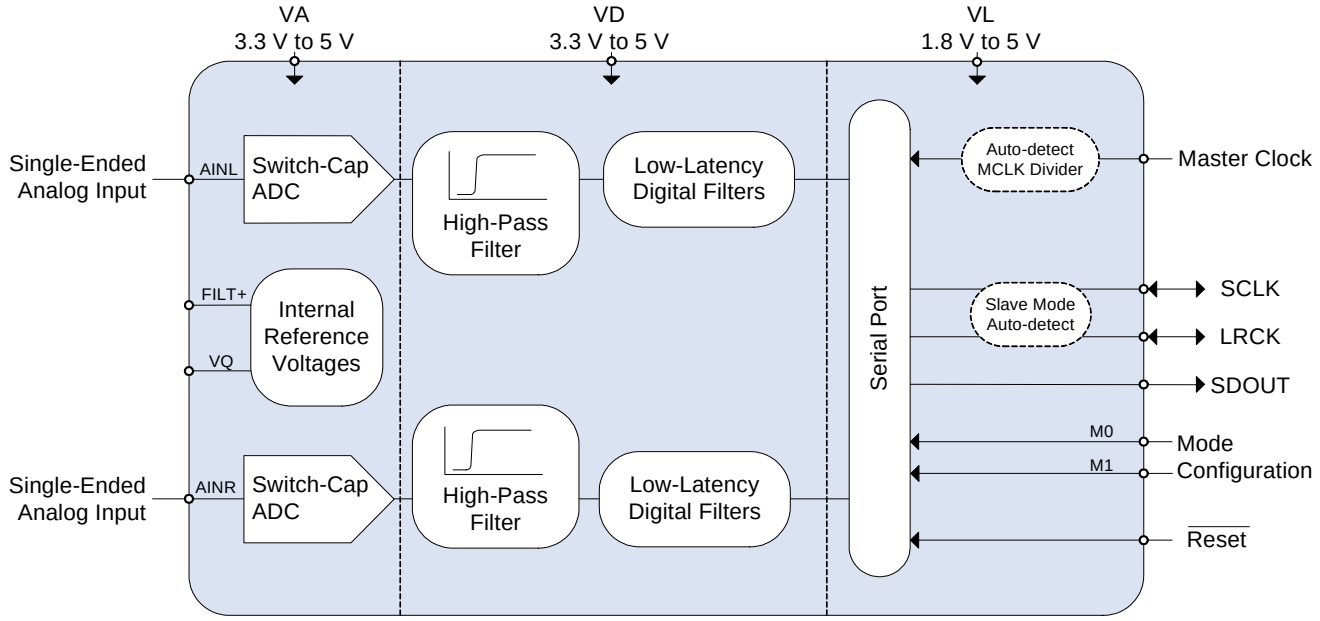



Copyright © Cirrus Logic, Inc. 2006
(All Rights Reserved)

查询"CS5341-CZZR"供应商

# TABLE OF CONTENTS

**1. CHARACTERISTICS AND SPECIFICATIONS ..... 4**
SPECIFIED OPERATING CONDITIONS ..... 4
ABSOLUTE MAXIMUM RATINGS ..... 4
ANALOG CHARACTERISTICS - COMMERCIAL GRADE ..... 5
ANALOG CHARACTERISTICS - AUTOMOTIVE GRADE ..... 6
DIGITAL FILTER CHARACTERISTICS ..... 7
DC ELECTRICAL CHARACTERISTICS ..... 10
DIGITAL CHARACTERISTICS ..... 10
SWITCHING CHARACTERISTICS - SERIAL AUDIO PORT ..... 11
**2. PIN DESCRIPTION ..... 13**
**3. TYPICAL CONNECTION DIAGRAM ..... 14**
**4. APPLICATIONS ..... 15**
4.1 Single-, Double-, and Quad-Speed Modes ..... 15
4.2 Operation as Either a Clock Master or Slave ..... 15
4.2.1 Operation as a Clock Master ..... 16
4.2.2 Operation as a Clock Slave with Auto-Detect ..... 16
4.2.3 Master Clock ..... 17
4.3 Serial Audio Interface ..... 17
4.4 Power-Up Sequence ..... 18
4.5 Analog Connections ..... 18
4.6 Grounding and Power Supply Decoupling ..... 18
4.7 Synchronization of Multiple Devices ..... 18
4.8 Capacitor Size on the Reference Pin (FILT+) ..... 19
**5. PARAMETER DEFINITIONS ..... 20**
**6. PACKAGE DIMENSIONS ..... 21**
THERMAL CHARACTERISTICS ..... 21
**7. ORDERING INFORMATION ..... 22**
**8. REVISION HISTORY ..... 22**

查询"CS5341-CZZR"供应商

## LIST OF FIGURES

Figure 1.Single-Speed Mode Stopband Rejection ..... 8
Figure 2.Single-Speed Mode Stopband Rejection ..... 8
Figure 3.Single-Speed Mode Transition Band (Detail) ..... 8
Figure 4.Single-Speed Mode Passband Ripple ..... 8
Figure 5.Double-Speed Mode Stopband Rejection ..... 8
Figure 6.Double-Speed Mode Stopband Rejection ..... 8
Figure 7.Double-Speed Mode Transition Band (Detail) ..... 9
Figure 8.Double-Speed Mode Passband Ripple ..... 9
Figure 9.Quad-Speed Mode Stopband Rejection ..... 9
Figure 10.Quad-Speed Mode Stopband Rejection ..... 9
Figure 11.Quad-Speed Mode Transition Band (Detail) ..... 9
Figure 12.Quad-Speed Mode Passband Ripple ..... 9
Figure 13.Master Mode, Left-Justified SAI ..... 12
Figure 14.Slave Mode, Left-Justified SAI ..... 12
Figure 15.Master Mode, I²S SAI ..... 12
Figure 16.Slave Mode, I²S SAI ..... 12
Figure 17.Typical Connection Diagram ..... 14
Figure 18.CS5341 Master Mode Clocking ..... 16
Figure 19.I²S Serial Audio Interface ..... 17
Figure 20.Left-Justified Serial Audio Interface ..... 17
Figure 21.CS5341 Recommended Analog Input Buffer ..... 18
Figure 22.CS5341 THD+N versus Frequency ..... 19

## LIST OF TABLES

Table 1. Speed Modes and the Associated Output Sample Rates (Fs) ..... 15
Table 2. CS5341 Mode Control ..... 15
Table 3. Master Clock (MCLK) Ratios ..... 17
Table 4. Master Clock (MCLK) Frequencies for Standard Audio Sample Rates ..... 17

查询"CS5341-CZZR"供应商

# 1. CHARACTERISTICS AND SPECIFICATIONS

(All Min/Max characteristics and specifications are guaranteed over the Specified Operating Conditions. Typical performance characteristics and specifications are derived from measurements taken at typical supply voltages and $T_A$ = 25°C.)

## SPECIFIED OPERATING CONDITIONS

(GND = 0 V, all voltages with respect to 0 V.)

| Parameter | | Symbol | Min | Typ | Max | Unit |
|---|---|---|---|---|---|---|
| Power Supplies | Analog | VA | 3.1 | (Note 1) | 5.25 | V |
| | Digital | VD | 3.1 | 3.3 | 5.25 | V |
| | Logic | VL | 1.7 | 3.3 | 5.25 | V |
| Ambient Operating Temperature | Commercial | $T_{AC}$ | -10 | - | 70 | °C |
| | Automotive | $T_{AC}$ | -40 | - | 85 | °C |

**Notes:**

1. This part is specified at typical analog voltages of 3.3 V and 5.0 V. See *Analog Characteristics - Commercial Grade* and *Analog Characteristics - Automotive Grade,* below, for details.

## ABSOLUTE MAXIMUM RATINGS

(GND = 0 V, All voltages with respect to ground.) (Note 2)

| Parameter | | Symbol | Min | Max | Units |
|---|---|---|---|---|---|
| DC Power Supplies: | Analog | VA | -0.3 | +6.0 | V |
| | Logic | VL | -0.3 | +6.0 | V |
| | Digital | VD | -0.3 | +6.0 | V |
| Input Current | (Note 3) | $I_{in}$ | -10 | +10 | mA |
| Analog Input Voltage | (Note 4) | $V_{IN}$ | GND-0.7 | VA+0.7 | V |
| Digital Input Voltage | (Note 4) | $V_{IND}$ | -0.7 | VL+0.7 | V |
| Ambient Operating Temperature (Power Applied) | | $T_A$ | -50 | +95 | °C |
| Storage Temperature | | $T_{stg}$ | -65 | +150 | °C |

2. Operation beyond these limits may result in permanent damage to the device. Normal operation is not guaranteed at these extremes.
3. Any pin except supplies. Transient currents of up to ±100 mA on the analog input pins will not cause SRC latch-up.
4. The maximum over/under voltage is limited by the input current.

查询"CS5341-CZZR"供应商

## ANALOG CHARACTERISTICS - COMMERCIAL GRADE

Test Conditions (unless otherwise specified): Input test signal is a 1 kHz sine wave; measurement bandwidth is 10 Hz to 20 kHz.

| Dynamic Performance for Commercial Grade | | | VA = 5 V | | | VA = 3.3 V | | | |
|---|---|---|---|---|---|---|---|---|---|
| ***Single-Speed Mode*** | ***Fs = 48 kHz*** | ***Symbol*** | ***Min*** | ***Typ*** | ***Max*** | ***Min*** | ***Typ*** | ***Max*** | ***Unit*** |
| Dynamic Range | A-weighted | | 99 | 105 | - | 96 | 102 | - | dB |
| | unweighted | | 96 | 102 | - | 93 | 99 | - | dB |
| Total Harmonic Distortion + Noise | (Note 5) | THD+N | | | | | | | |
| | -1 dB | | - | -98 | -92 | - | -95 | -89 | dB |
| | -20 dB | | - | -82 | - | - | -79 | - | dB |
| | -60 dB | | - | -42 | - | - | -39 | - | dB |
| ***Double-Speed Mode*** | ***Fs = 96 kHz*** | ***Symbol*** | ***Min*** | ***Typ*** | ***Max*** | ***Min*** | ***Typ*** | ***Max*** | ***Unit*** |
| Dynamic Range | A-weighted | | 99 | 105 | - | 96 | 102 | - | dB |
| | unweighted | | 96 | 102 | - | 93 | 99 | - | dB |
| | 40 kHz bandwidth unweighted | | - | 99 | - | - | 96 | - | dB |
| Total Harmonic Distortion + Noise | (Note 5) | THD+N | | | | | | | |
| | -1 dB | | - | -98 | -92 | - | -95 | -89 | dB |
| | -20 dB | | - | -82 | - | - | -79 | - | dB |
| | -60 dB | | - | -42 | - | - | -39 | - | dB |
| | 40 kHz bandwidth -1 dB | | - | -95 | - | - | -87 | - | dB |
| ***Quad-Speed Mode*** | ***Fs = 192 kHz*** | ***Symbol*** | ***Min*** | ***Typ*** | ***Max*** | ***Min*** | ***Typ*** | ***Max*** | ***Unit*** |
| Dynamic Range | A-weighted | | 99 | 105 | - | 96 | 102 | - | dB |
| | unweighted | | 96 | 102 | - | 93 | 99 | - | dB |
| | 40 kHz bandwidth unweighted | | - | 99 | - | - | 96 | - | dB |
| Total Harmonic Distortion + Noise | (Note 5) | THD+N | | | | | | | |
| | -1 dB | | - | -98 | -92 | - | -95 | -89 | dB |
| | -20 dB | | - | -82 | - | - | -79 | - | dB |
| | -60 dB | | - | -42 | - | - | -39 | - | dB |
| | 40 kHz bandwidth -1 dB | | - | -95 | - | - | -87 | - | dB |

| ***Dynamic Performance All Modes*** | ***Min*** | ***Typ*** | ***Max*** | ***Unit*** |
|---|---|---|---|---|
| Interchannel Isolation | - | 90 | - | dB |
| ***DC Accuracy*** | | | | |
| Interchannel Gain Mismatch | - | 0.1 | - | dB |
| Gain Error | -5 | - | +5 | % |
| Gain Drift | - | ±100 | - | ppm/°C |
| ***Analog Input Characteristics*** | | | | |
| Full-Scale Input Voltage | 0.53*VA | 0.56*VA | 0.59*VA | Vpp |
| Input Impedance | - | 25 | - | kΩ |

5. Referred to the typical full-scale input voltage

查询"CS5341-CZZR"供应商

## ANALOG CHARACTERISTICS - AUTOMOTIVE GRADE

Test Conditions (unless otherwise specified): Input test signal is a 1 kHz sine wave; measurement bandwidth is 10 Hz to 20 kHz.

| Dynamic Performance for Automotive Grade | | | VA = 5 V | | | VA = 3.3 V | | | |
|---|---|---|---|---|---|---|---|---|---|
| ***Single-Speed Mode*** | ***Fs = 48 kHz*** | ***Symbol*** | ***Min*** | ***Typ*** | ***Max*** | ***Min*** | ***Typ*** | ***Max*** | ***Unit*** |
| Dynamic Range | A-weighted | | 97 | 105 | - | 94 | 102 | - | dB |
| | unweighted | | 94 | 102 | - | 91 | 99 | - | dB |
| Total Harmonic Distortion + Noise | (Note 6) | THD+N | | | | | | | |
| | -1 dB | | - | -98 | -90 | - | -95 | -87 | dB |
| | -20 dB | | - | -82 | - | - | -79 | - | dB |
| | -60 dB | | - | -42 | - | - | -39 | - | dB |
| ***Double-Speed Mode*** | ***Fs = 96 kHz*** | ***Symbol*** | ***Min*** | ***Typ*** | ***Max*** | ***Min*** | ***Typ*** | ***Max*** | ***Unit*** |
| Dynamic Range | A-weighted | | 97 | 105 | - | 94 | 102 | - | dB |
| | unweighted | | 94 | 102 | - | 91 | 99 | - | dB |
| | 40 kHz bandwidth unweighted | | - | 99 | - | - | 96 | - | dB |
| Total Harmonic Distortion + Noise | (Note 6) | THD+N | | | | | | | |
| | -1 dB | | - | -98 | -90 | - | -95 | -87 | dB |
| | -20 dB | | - | -82 | - | - | -79 | - | dB |
| | -60 dB | | - | -42 | - | - | -39 | - | dB |
| | 40 kHz bandwidth -1 dB | | - | -95 | - | - | -87 | - | dB |
| ***Quad-Speed Mode*** | ***Fs = 192 kHz*** | ***Symbol*** | ***Min*** | ***Typ*** | ***Max*** | ***Min*** | ***Typ*** | ***Max*** | ***Unit*** |
| Dynamic Range | A-weighted | | 97 | 105 | - | 94 | 102 | - | dB |
| | unweighted | | 94 | 102 | - | 91 | 99 | - | dB |
| | 40 kHz bandwidth unweighted | | - | 99 | - | - | 96 | - | dB |
| Total Harmonic Distortion + Noise | (Note 6) | THD+N | | | | | | | |
| | -1 dB | | - | -98 | -90 | - | -95 | -87 | dB |
| | -20 dB | | - | -82 | - | - | -79 | - | dB |
| | -60 dB | | - | -42 | - | - | -39 | - | dB |
| | 40 kHz bandwidth -1 dB | | - | -95 | - | - | -87 | - | dB |

| ***Dynamic Performance All Modes*** | ***Min*** | ***Typ*** | ***Max*** | ***Unit*** |
|---|---|---|---|---|
| Interchannel Isolation | - | 90 | - | dB |
| ***DC Accuracy*** | | | | |
| Interchannel Gain Mismatch | - | 0.1 | - | dB |
| Gain Error | -10 | - | +10 | % |
| Gain Drift | - | ±100 | - | ppm/°C |
| ***Analog Input Characteristics*** | | | | |
| Full-Scale Input Voltage | 0.50*VA | 0.56*VA | 0.62*VA | Vpp |
| Input Impedance | - | 25 | - | kΩ |

6. Referred to the typical full-scale input voltage

查询"CS5341-CZZR"供应商

## DIGITAL FILTER CHARACTERISTICS

| Parameter | | | Symbol | Min | Typ | Max | Unit |
|---|---|---|---|---|---|---|---|
| ***Single-Speed Mode*** | | | | | | | |
| Passband | (-0.1 dB) | (Note 7) | | 0 | - | 0.4895 | Fs |
| Passband Ripple | | | | -0.035 | - | 0.035 | dB |
| Stopband | | (Note 7) | | 0.5687 | - | - | Fs |
| Stopband Attenuation | | | | 70 | - | - | dB |
| Total Group Delay (Fs = Output Sample Rate) | | | $t_{gd}$ | - | 12/Fs | - | s |
| ***Double-Speed Mode*** | | | | | | | |
| Passband | (-0.1 dB) | (Note 7) | | 0 | - | 0.4895 | Fs |
| Passband Ripple | | | | -0.025 | - | 0.025 | dB |
| Stopband | | (Note 7) | | 0.5604 | - | - | Fs |
| Stopband Attenuation | | | | 69 | - | - | dB |
| Total Group Delay (Fs = Output Sample Rate) | | | $t_{gd}$ | - | 9/Fs | - | s |
| ***Quad-Speed Mode*** | | | | | | | |
| Passband | (-0.1 dB) | (Note 7) | | 0 | - | 0.2604 | Fs |
| Passband Ripple | | | | -0.025 | - | 0.025 | dB |
| Stopband | | (Note 7) | | 0.5 | - | - | Fs |
| Stopband Attenuation | | | | 60 | - | - | dB |
| Total Group Delay (Fs = Output Sample Rate) | | | $t_{gd}$ | - | 5/Fs | - | s |
| ***High-Pass Filter Characteristics*** | | | | | | | |
| Frequency Response | -3.0 dB<br>-0.13 dB | <br>(Note 8) | | - | 1<br>20 | -<br>- | Hz<br>Hz |
| Phase Deviation | @ 20 Hz | (Note 8) | | - | 10 | - | Deg |
| Passband Ripple | | | | - | - | 0 | dB |

7. Filter characteristics scale precisely with Fs
8. Response shown is for Fs equal to 48 kHz. Filter characteristics scale with Fs.

查询"CS5341-CZZR"供应商

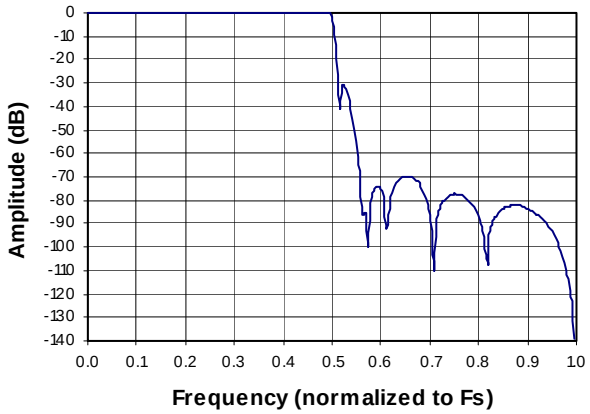


**Figure 1. Single-Speed Mode Stopband Rejection**

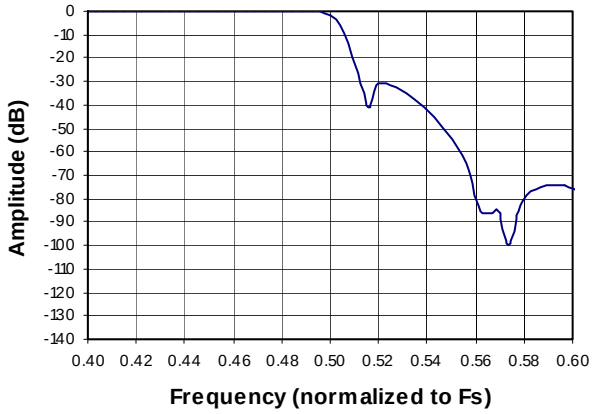


**Figure 2. Single-Speed Mode Stopband Rejection**

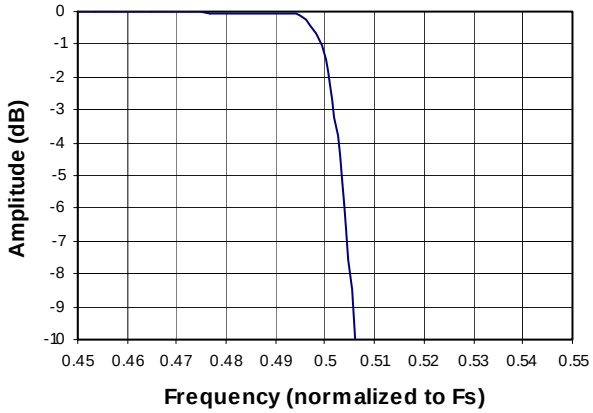


**Figure 3. Single-Speed Mode Transition Band (Detail)**

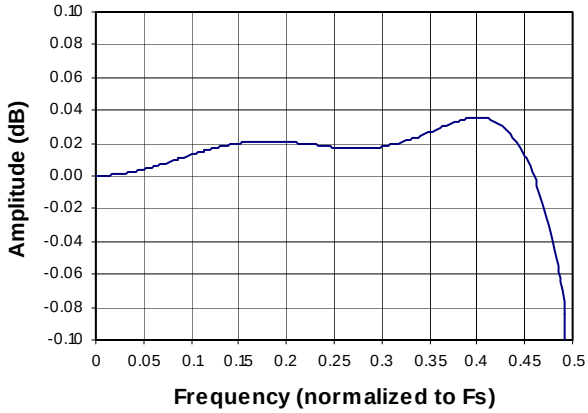


**Figure 4. Single-Speed Mode Passband Ripple**

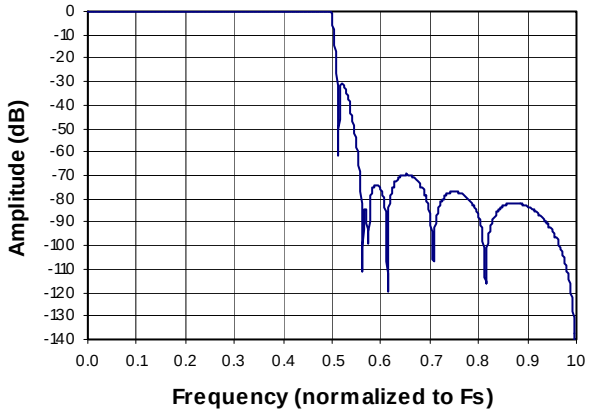


**Figure 5. Double-Speed Mode Stopband Rejection**

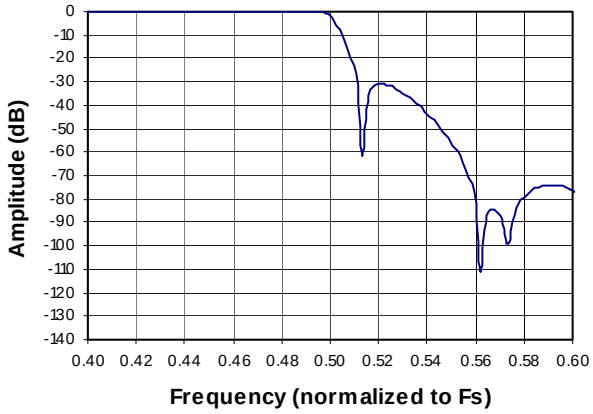


**Figure 6. Double-Speed Mode Stopband Rejection**

查询"CS5341-CZZR"供应商

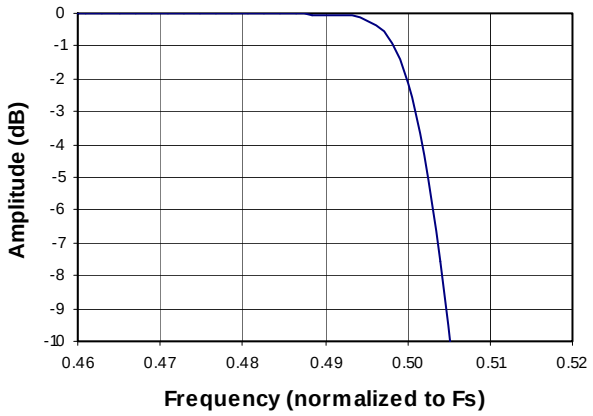


**Figure 7. Double-Speed Mode Transition Band (Detail)**

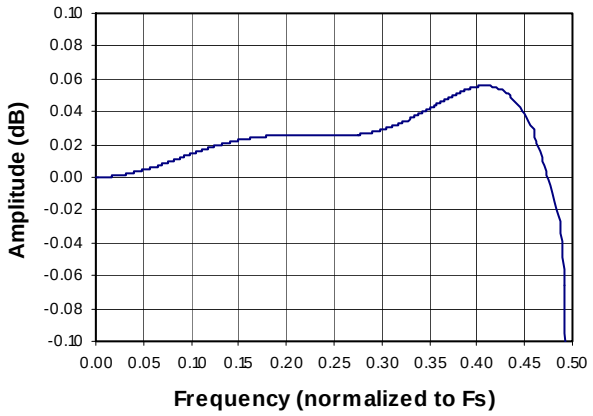


**Figure 8. Double-Speed Mode Passband Ripple**

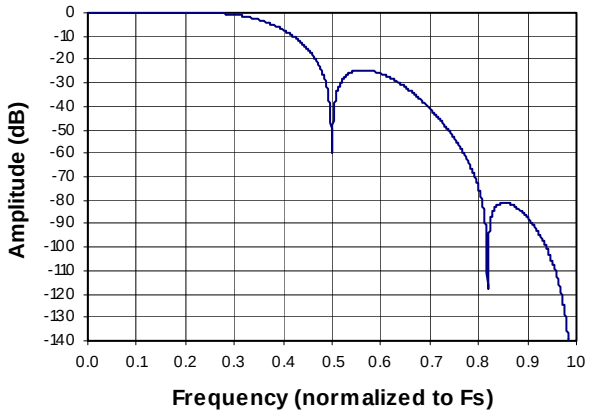


**Figure 9. Quad-Speed Mode Stopband Rejection**

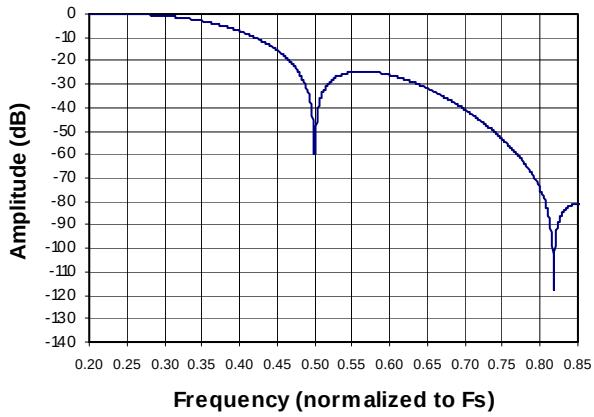


**Figure 10. Quad-Speed Mode Stopband Rejection**

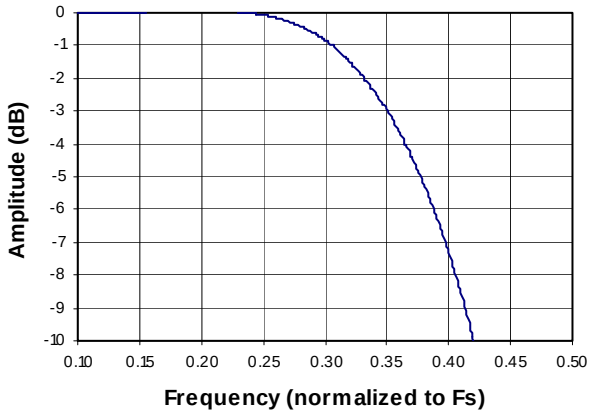


**Figure 11. Quad-Speed Mode Transition Band (Detail)**

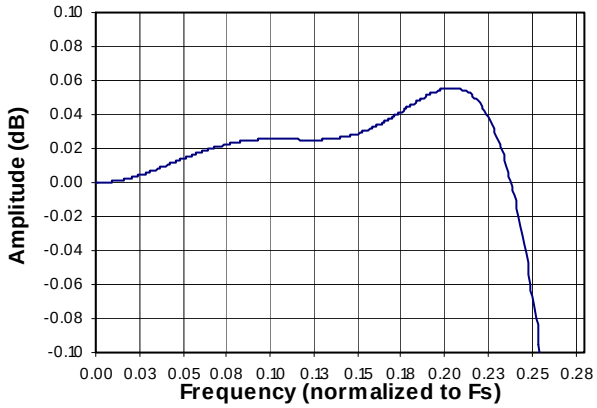


**Figure 12. Quad-Speed Mode Passband Ripple**

查询"CS5341-CZZR"供应商

## DC ELECTRICAL CHARACTERISTICS

(GND = 0 V, all voltages with respect to 0 V. MCLK=12.288 MHz; Master Mode)

| Parameter | | Symbol | Min | Typ | Max | Unit |
|---|---|---|---|---|---|---|
| DC Power Supplies: | Positive Analog | VA | 3.1 | - | 5.25 | V |
| | Positive Digital | VD | 3.1 | - | 5.25 | V |
| | Positive Logic | VL | 1.7 | - | 5.25 | V |
| Power Supply Current | VA = 5 V | $I_A$ | - | 21 | 25.5 | mA |
| (Normal Operation) | VA = 3.3 V | $I_A$ | - | 18.2 | 22.5 | mA |
| | VL,VD = 5 V | $I_D$ | - | 15 | 18.5 | mA |
| | VL,VD = 3.3 V | $I_D$ | - | 9 | 10 | mA |
| Power Supply Current | VA = 5 V | $I_A$ | - | 1.5 | - | mA |
| (Power-Down Mode) (Note 9) | VL,VD=5 V | $I_D$ | - | 0.4 | - | mA |
| Power Consumption | VL, VD, VA = 5 V | - | - | 180 | 220 | mW |
| (Normal Operation) | VL, VD, VA = 3.3 V | - | - | 90 | 107.2 | mW |
| | (Power-Down Mode) | - | - | 9.5 | - | mW |
| Power Supply Rejection Ratio (1 kHz) | (Note 10) | PSRR | - | 65 | - | dB |
| $V_Q$ Nominal Voltage | | | - | VA÷2 | - | V |
| Output Impedance | | | - | 25 | - | kΩ |
| Filt+ Nominal Voltage | | | - | VA | - | V |
| Output Impedance | | | - | 36 | - | kΩ |
| Maximum allowable DC current source/sink | | | - | 0.01 | - | mA |

9. Power-Down Mode is defined as $\overline{RST}$ = Low, with all clocks and data lines held static at a valid logic levels.
10. Valid with the recommended capacitor values on FILT+ and VQ as shown in the Typical Connection Diagram.

## DIGITAL CHARACTERISTICS

| Parameter | | Symbol | Min | Typ | Max | Units |
|---|---|---|---|---|---|---|
| High-Level Input Voltage | (% of VL) | $V_{IH}$ | 70% | - | - | V |
| Low-Level Input Voltage | (% of VL) | $V_{IL}$ | - | - | 30% | V |
| High-Level Output Voltage at $I_o$ = 100 µA | (% of VL) | $V_{OH}$ | 70% | - | - | V |
| Low-Level Output Voltage at $I_o$ =100 µA | (% of VL) | $V_{OL}$ | - | - | 15% | V |
| Input Leakage Current | | $I_{in}$ | -10 | - | +10 | µA |

查询"CS5341-CZZR"供应商

## SWITCHING CHARACTERISTICS - SERIAL AUDIO PORT

(Logic "0" = GND = 0 V; Logic "1" = VL, $C_L$ = 20 pF)

| Parameter | | Symbol | Min | Typ | Max | Unit |
|---|---|---|---|---|---|---|
| ***MCLK Specifications*** | | | | | | |
| MCLK Period | | $t_{clkw}$ | 39 | - | 45 | ns |
| | | | 78 | - | 1953 | ns |
| MCLK Pulse Duty Cycle | | | 40 | - | 60 | % |
| ***Master Mode*** | | | | | | |
| SCLK falling to LRCK | Single-Speed | $t_{mslr}$ | -20 | - | 20 | ns |
| | Double-Speed | | -20 | - | 20 | ns |
| | Quad-Speed | | -8 | - | 8 | ns |
| SCLK falling to SDOUT valid. | | $t_{sdo}$ | - | - | 32 | ns |
| SCLK Duty Cycle. | Single-Speed | | - | 50 | - | % |
| | Double-Speed | | - | 50 | - | % |
| | Quad-Speed | | - | 33 | - | % |
| ***Slave Mode*** | | | | | | |
| ***Single-Speed*** (Note 11) | | | | | | |
| LRCK Duty Cycle | | | 40 | 50 | 60 | % |
| SCLK Period | | $t_{sclkw}$ | 156 | - | - | ns |
| SCLK Duty Cycle | | | 45 | 50 | 55 | % |
| SDOUT valid before SCLK rising | | $t_{stp}$ | 10 | - | - | ns |
| SDOUT valid after SCLK rising | | $t_{hld}$ | 5 | - | - | ns |
| SCLK falling to LRCK edge | | $t_{slrd}$ | -20 | - | 20 | ns |
| ***Double-Speed*** (Note 11) | | | | | | |
| LRCK Duty Cycle | | | 40 | 50 | 60 | % |
| SCLK Period | | $t_{sclkw}$ | 156 | - | - | ns |
| SCLK Duty Cycle | | | 45 | 50 | 55 | % |
| SDOUT valid before SCLK rising | | $t_{stp}$ | 10 | - | - | ns |
| SDOUT valid after SCLK rising | | $t_{hld}$ | 5 | - | - | ns |
| SCLK falling to LRCK edge. | | $t_{slrd}$ | -20 | - | 20 | ns |
| ***Quad-Speed*** (Note 11) | | | | | | |
| LRCK Duty Cycle | | | 40 | 50 | 60 | % |
| SCLK Period | | $t_{sclkw}$ | 78 | - | - | ns |
| SCLK Duty Cycle | | | 29.7 | 33 | 50 | % |
| SDOUT valid before SCLK rising | | $t_{stp}$ | 10 | - | - | ns |
| SDOUT valid after SCLK rising | | $t_{hld}$ | 5 | - | - | ns |
| SCLK falling to LRCK edge. | | $t_{slrd}$ | -8 | - | 8 | ns |

11. For a description of speed modes, please refer to Table 1 on page 15.

查询"CS5341-CZZR"供应商

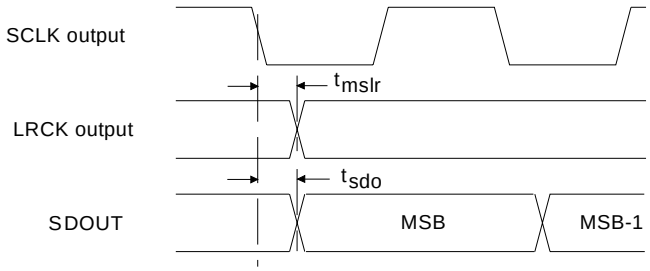


**Figure 13. Master Mode, Left-Justified SAI**

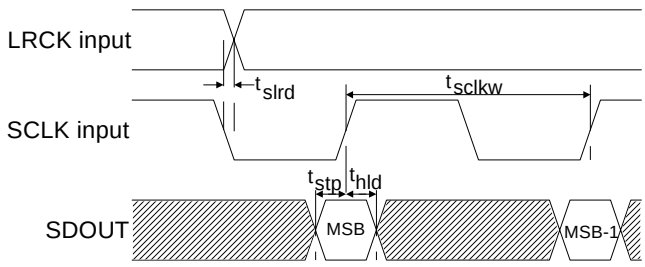


**Figure 14. Slave Mode, Left-Justified SAI**

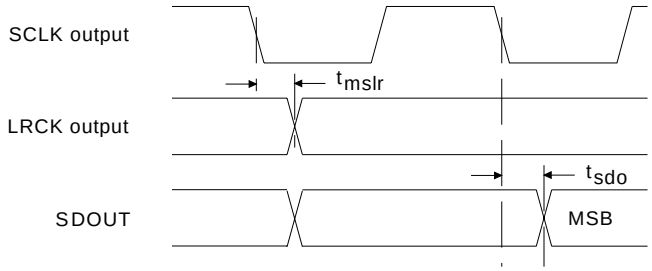


**Figure 15. Master Mode, I²S SAI**

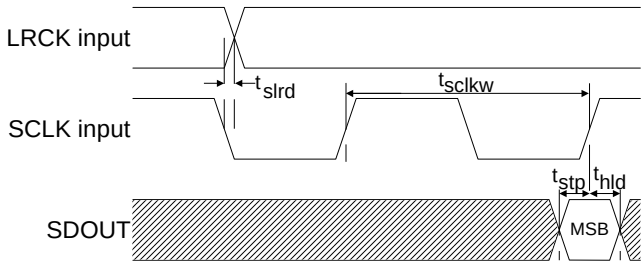


**Figure 16. Slave Mode, I²S SAI**

查询"CS5341-CZZR"供应商

## 2. PIN DESCRIPTION

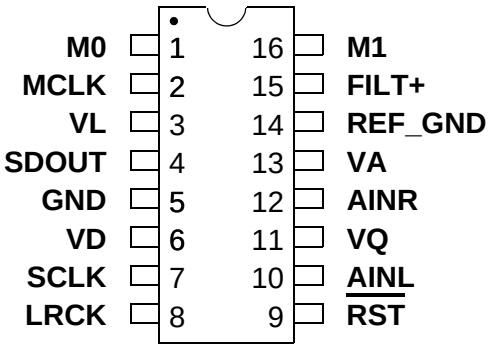


| Pin Name | # | Pin Description |
|---|---|---|
| M0<br>M1 | 1<br>16 | **Mode Selection** (*Input*) - Determines the operational mode of the device. |
| MCLK | 2 | **Master Clock** (*Input*) - Clock source for the delta-sigma modulator and digital filters. |
| VL | 3 | **Logic Power** (*Input*) **-** Positive power for the digital input/output. |
| SDOUT | 4 | **Serial Audio Data Output** (*Output*) - Output for two's complement serial audio data. |
| GND | 5,14 | **Ground** (*Input*) - Ground reference. Must be connected to analog ground. |
| VD | 6 | **Digital Power** (*Input*) **-** Positive power supply for the digital section. |
| SCLK | 7 | **Serial Clock** (*Input*/*Output*) - Serial clock for the serial audio interface. |
| LRCK | 8 | **Left Right Clock** (*Input*/*Output*) - Determines which channel, Left or Right, is currently active on the serial audio data line. |
| $\overline{\text{RST}}$ | 9 | **Reset** (*Input*) - The device enters a low power mode when low. |
| AINL<br>AINR | 10<br>12 | **Analog Input** (*Input*) - The full-scale analog input level is specified in the Analog Characteristics specification table. |
| VQ | 11 | **Quiescent Voltage** *(Output)* **-** Filter connection for the internal quiescent reference voltage. |
| VA | 13 | **Analog Power** (*Input*) **-** Positive power supply for the analog section. |
| FILT+ | 15 | **Positive Voltage Reference** (*Output*) **-** Positive reference voltage for the internal sampling circuits. |

查询"CS5341-CZZR"供应商

# 3. TYPICAL CONNECTION DIAGRAM

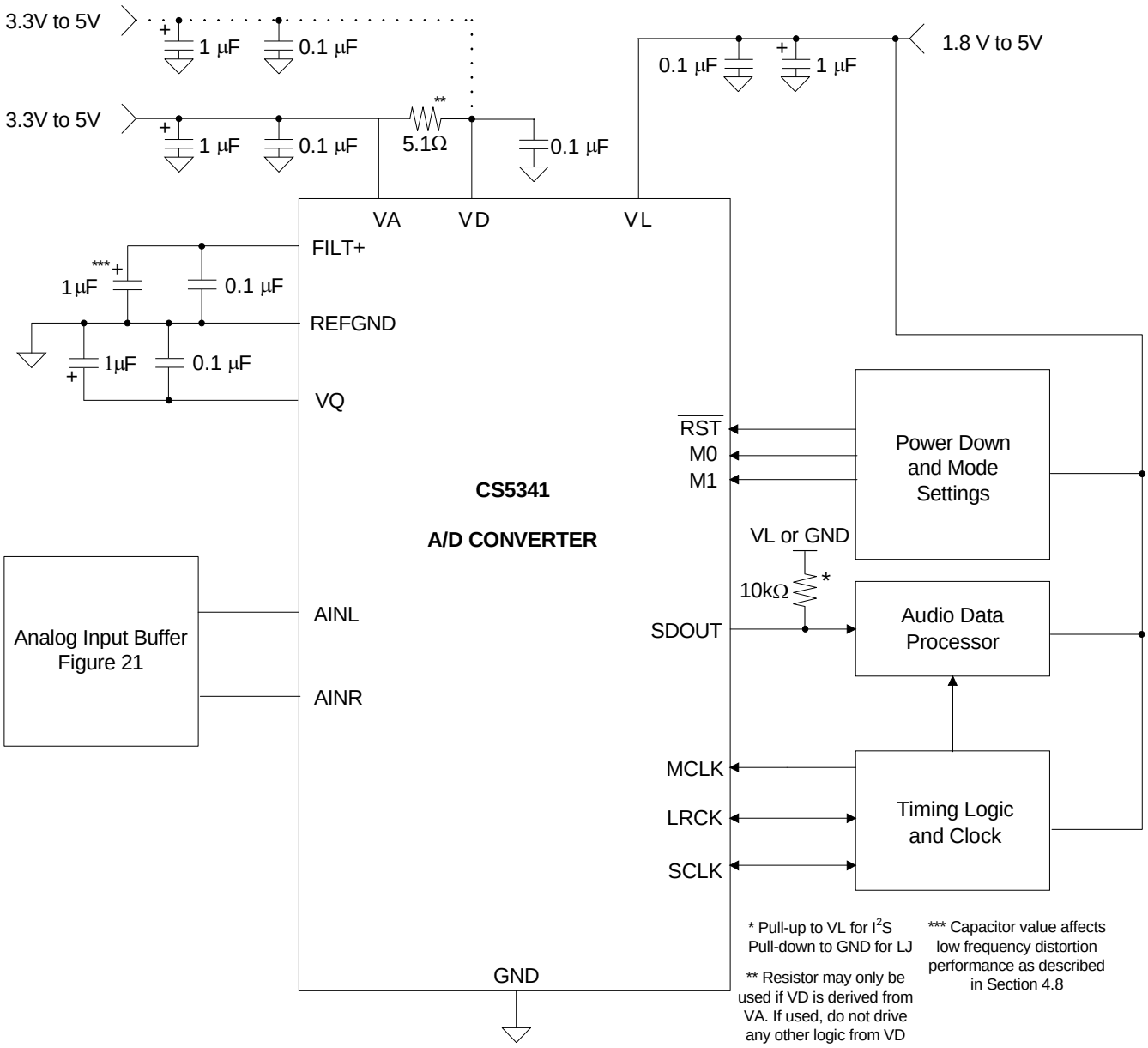

查询"CS5341-CZZR"供应商

# 4. APPLICATIONS

## 4.1 Single-, Double-, and Quad-Speed Modes

The CS5341 can support output sample rates from 2 kHz to 200 kHz. The proper speed mode can be determined by the desired output sample rate and the external MCLK/LRCK ratio, as shown in Table 1.

| Speed Mode | MCLK/LRCK Ratio | Output Sample Rate Range (kHz) |
|---|---|---|
| Single-Speed Mode | 512x | 43 - 50 |
| | 256x | 2 - 50 |
| Double-Speed Mode | 256x | 86 - 100 |
| | 128x | 50 - 100 |
| Quad-Speed Mode | 128x | 172 - 200 |
| | 64x* | 100 - 200 |
| * Quad-Speed Mode, 64x only available in Master Mode. | | |

**Table 1. Speed Modes and the Associated Output Sample Rates (Fs)**

## 4.2 Operation as Either a Clock Master or Slave

The CS5341 supports operation as either a clock master or slave. As a clock master, the LRCK and SCLK pins are outputs with the left/right and serial clocks synchronously generated on-chip. As a clock slave, the LRCK and SCLK pins are inputs and require the left/right and serial clocks to be externally generated. The selection of clock master or slave is made via the Mode pins as shown in Table 2.

| M1 (Pin 16) | M0 (Pin 1) | MODE |
|---|---|---|
| 0 | 0 | Clock Master, Single-Speed Mode |
| 0 | 1 | Clock Master, Double-Speed Mode |
| 1 | 0 | Clock Master, Quad-Speed Mode |
| 1 | 1 | Clock Slave, All Speed Modes |

**Table 2. CS5341 Mode Control**

查询"CS5341-CZZR"供应商

### 4.2.1 Operation as a Clock Master

As a clock master, LRCK and SCLK operate as outputs. The left/right and serial clocks are internally derived from the master clock with the left/right clock equal to Fs and the serial clock equal to 64x Fs, as shown in Figure 18.

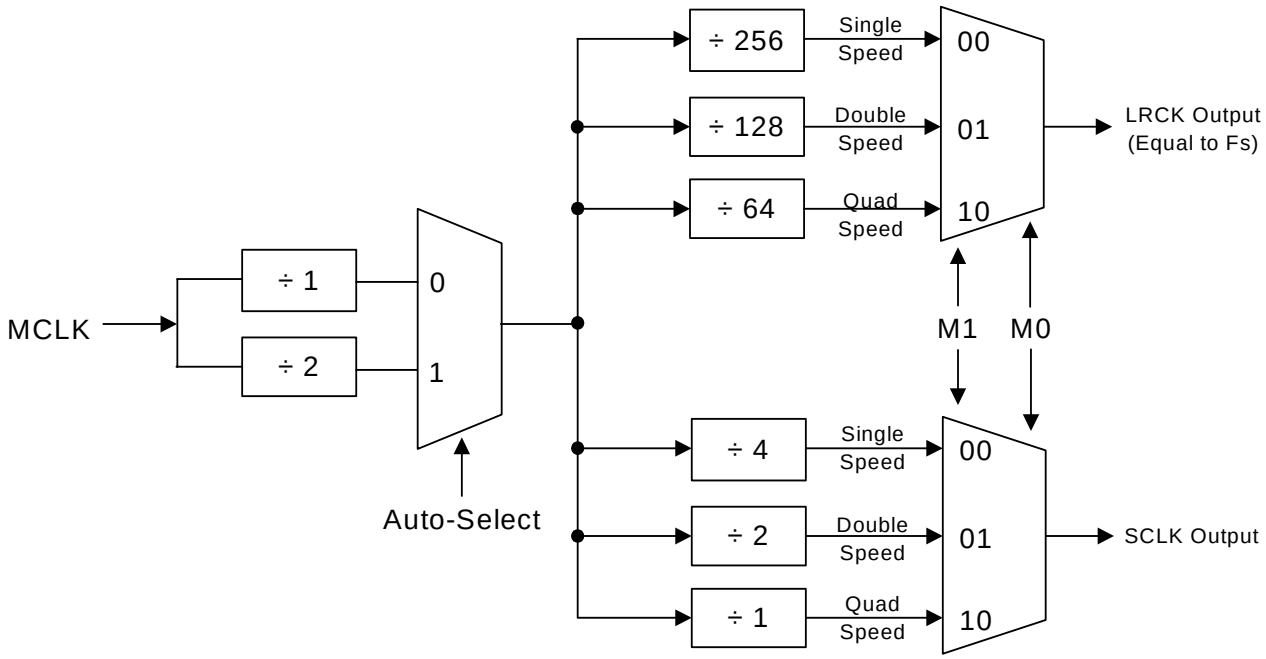


**Figure 18. CS5341 Master Mode Clocking**

### 4.2.2 Operation as a Clock Slave with Auto-Detect

LRCK and SCLK operate as inputs in clock Slave Mode. It is recommended that the left/right clock be synchronously derived from the master clock and must be equal to Fs. It is also recommended that the serial clock be synchronously derived from the master clock and be equal to 64x Fs to maximize system performance.

A unique feature of the CS5341 is the automatic selection of either Single-, Double- or Quad-Speed Mode when operating as a clock slave. The auto-mode select feature negates the need to configure the Mode pins to correspond to the desired mode. The auto-mode selection feature supports all standard audio sample rates from 2 to 200 kHz. However, there are ranges of non-standard audio sample rates that are not supported when operating with a fast MCLK (512x, 256x, 128x for Single-, Double-, and Quad-Speed Modes, respectively). Please refer to Table 1 for supported sample rate ranges.

查询"CS5341-CZZR"供应商

### 4.2.3 Master Clock

The CS5341 requires a Master clock (MCLK) which runs the internal sampling circuits and digital filters. There is also an internal MCLK divider which is automatically activated based on the speed mode and frequency of the MCLK. Table 3 shows a listing of the external MCLK/LRCK ratios that are required. Table 4 lists some common audio output sample rates and the required MCLK frequency. Please note that not all of the listed sample rates are supported when operating with a fast MCLK (512x, 256x, 128x for Single-, Double-, and Quad-Speed Modes, respectively).

| | Single-Speed Mode | Double-Speed Mode | Quad-Speed Mode |
|---|---|---|---|
| MCLK/LRCK Ratio | 256x, 512x | 128x, 256x | 64x*,128x |
| * Quad Speed, 64x only available in Master Mode. | | | |

**Table 3. Master Clock (MCLK) Ratios**

| SAMPLE RATE (kHz) | MCLK (MHz) |
|---|---|
| 32 | 8.192 |
| 44.1 | 11.2896<br>22.5792 |
| 48 | 12.288<br>24.576 |
| 64 | 8.192 |
| 88.2 | 11.2896<br>22.5792 |
| 96 | 12.288<br>24.576 |
| 192 | 12.288<br>24.576 |

**Table 4. Master Clock (MCLK) Frequencies for Standard Audio Sample Rates**

## 4.3 Serial Audio Interface

The CS5341 supports both I²S and Left-Justified serial audio formats. Upon start-up, the CS5341 will detect the logic level on SDOUT (pin 4). A 10 kΩ pull-up to VL is needed to select I²S format, and a 10 kΩ pull-down to GND is needed to select Left-Justified format. Figures 19 and 20 illustrate the I²S and Left-Justified audio formats. Please see Figures 13 through 16, for more information on the required timing for the two serial audio interface formats. Also see Application Note AN282 for a detailed discussion of the serial audio interface formats.

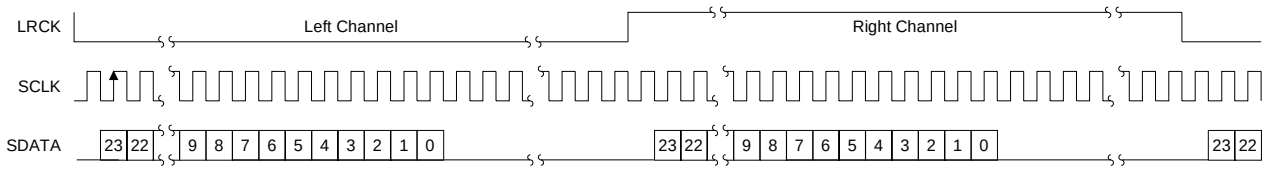


**Figure 19. I²S Serial Audio Interface**

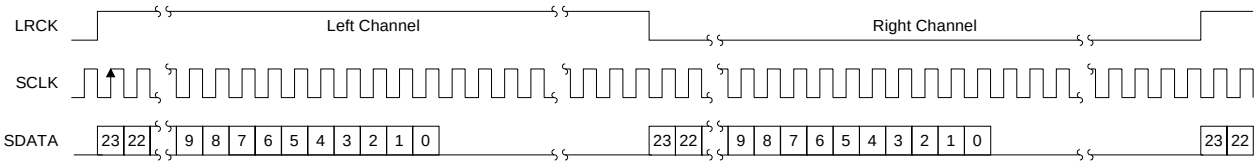


**Figure 20. Left-Justified Serial Audio Interface**

查询"CS5341-CZZR"供应商

## 4.4 Power-Up Sequence

Reliable power-up can be accomplished by keeping the device in reset until the power supplies, clocks and configuration pins are stable. It is also recommended that reset be enabled if the analog or digital supplies drop below the minimum specified operating voltages to prevent power-glitch-related issues.

## 4.5 Analog Connections

The analog modulator samples the input at half of the MCLK frequency, or nominally 6.144 MHz. The digital filter will reject signals within the stopband of the filter. However, there is no rejection for input signals which are multiples of the input sampling frequency (n × 6.144 MHz), where n=0,1,2,... Refer to Figure 21, which shows the suggested filter that will attenuate any noise energy at 6.144 MHz in addition to providing the optimum source impedance for the modulators. The use of capacitors that have a large voltage coefficient (such as general-purpose ceramics) must be avoided since these can degrade signal linearity.

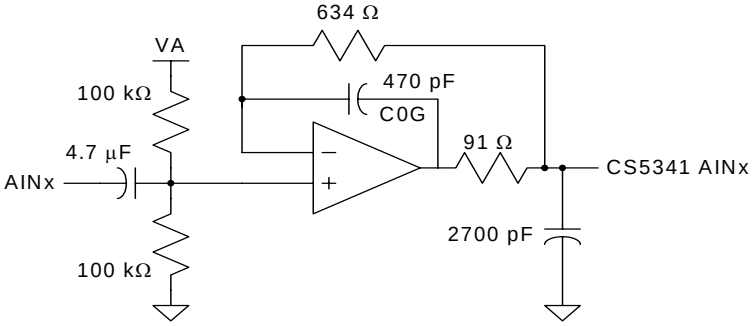


**Figure 21. CS5341 Recommended Analog Input Buffer**

## 4.6 Grounding and Power Supply Decoupling

As with any high resolution converter, achieving optimal performance from the CS5341 requires careful attention to power supply and grounding arrangements. Figure 17 shows the recommended power arrangements, with VA and VL connected to clean supplies. VD, which powers the digital filter, may be run from the system logic supply or may be powered from the analog supply via a resistor. In this case, no additional devices should be powered from VD. Decoupling capacitors should be as near to the ADC as possible, with the low-value ceramic capacitor being the nearest. All signals, especially clocks, should be kept away from the FILT+ and VQ pins in order to avoid unwanted coupling into the modulators. The FILT+ and VQ decoupling capacitors, particularly the 0.01 µF, must be positioned to minimize the electrical path from FILT+ and REF_GND. Furthermore, all ground pins on CS5341 should be referenced to the same ground reference. The CDB5341 evaluation board demonstrates the optimum layout and power supply arrangements. To minimize digital noise, connect the ADC digital outputs only to CMOS inputs.

## 4.7 Synchronization of Multiple Devices

In systems where multiple ADCs are required, the user can achieve simultaneous sampling if the MCLK and LRCK signals are the same for all of the CS5341's in the system. If only one master clock source is needed, one solution is to place one CS5341 in Master Mode, and slave all of the other CS5341's to the one master. If multiple master clock sources are needed, a possible solution would be to supply all clocks from the same external source and time the CS5341 reset with the inactive (falling) edge of MCLK. This will ensure that all converters begin sampling on the same clock edge.

查询"CS5341-CZZR"供应商

## 4.8 Capacitor Size on the Reference Pin (FILT+)

The CS5341 requires an external capacitance on the internal reference voltage pin, FILT+. The size of this decoupling capacitor will affect the low frequency distortion performance as shown in Figure 22, with larger capacitor values used to optimize low frequency distortion performance. This plot was taken using the CDB5341 evaluation platform, with the device running in Single-Speed Mode and VA=VD=VL=5 V.

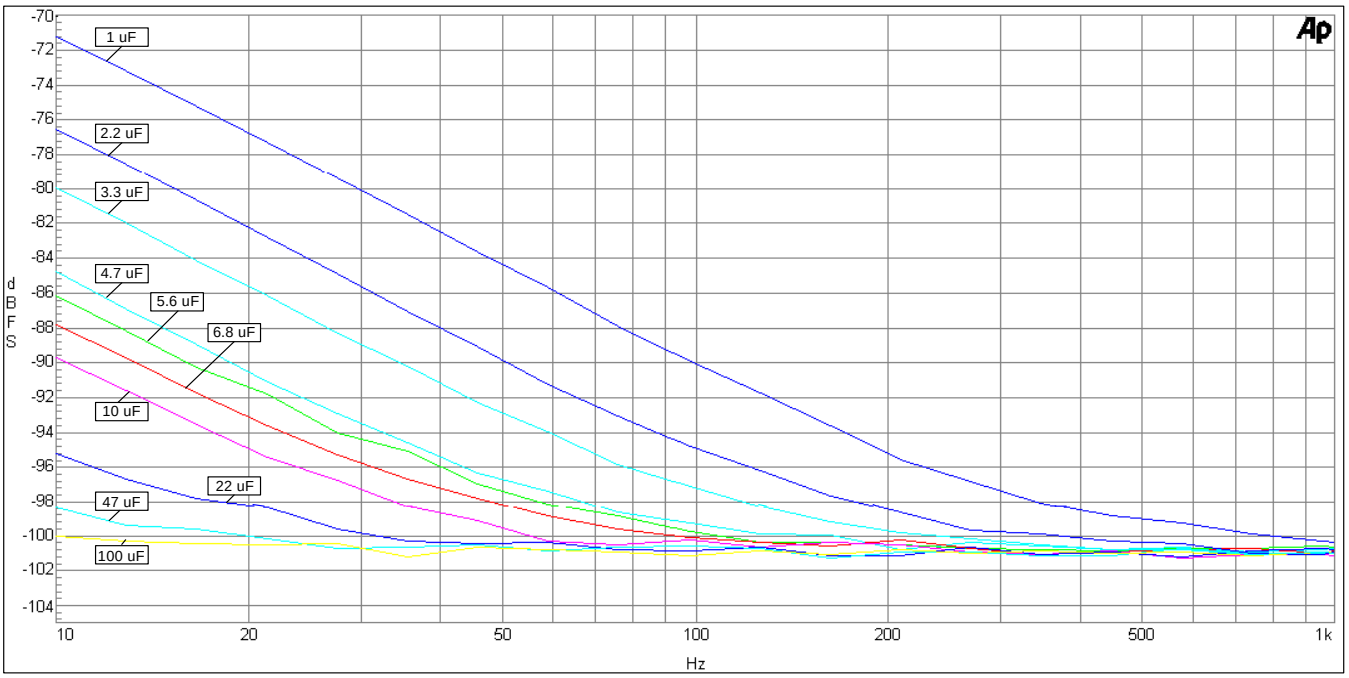


**Figure 22. CS5341 THD+N versus Frequency**

查询"CS5341-CZZR"供应商

# 5. PARAMETER DEFINITIONS

**Dynamic Range**

The ratio of the rms value of the signal to the rms sum of all other spectral components over the specified bandwidth. Dynamic Range is a signal-to-noise ratio measurement over the specified bandwidth made with a -60 dBFS signal. 60 dB is added to resulting measurement to refer the measurement to full-scale. This technique ensures that the distortion components are below the noise level and do not affect the measurement. This measurement technique has been accepted by the Audio Engineering Society, AES17-1991, and the Electronic Industries Association of Japan, EIAJ CP-307. Expressed in decibels.

**Total Harmonic Distortion + Noise**

The ratio of the rms value of the signal to the rms sum of all other spectral components over the specified bandwidth (typically 10 Hz to 20 kHz), including distortion components. Expressed in decibels. Measured at -1 and -20 dBFS as suggested in AES17-1991 Annex A.

**Frequency Response**

A measure of the amplitude response variation from 10 Hz to 20 kHz relative to the amplitude response at 1 kHz. Units in decibels.

**Interchannel Isolation**

A measure of crosstalk between the left and right channels. Measured for each channel at the converter's output with no signal to the input under test and a full-scale signal applied to the other channel. Units in decibels.

**Interchannel Gain Mismatch**

The gain difference between left and right channels. Units in decibels.

**Gain Error**

The deviation from the nominal full-scale analog input for a full-scale digital output.

**Gain Drift**

The change in gain value with temperature. Units in ppm/°C.

**Offset Error**

The deviation of the mid-scale transition (111...111 to 000...000) from the ideal. Units in mV.

查询"CS5341-CZZR"供应商

# 6. PACKAGE DIMENSIONS

## 16L TSSOP (4.4 mm BODY) PACKAGE DRAWING

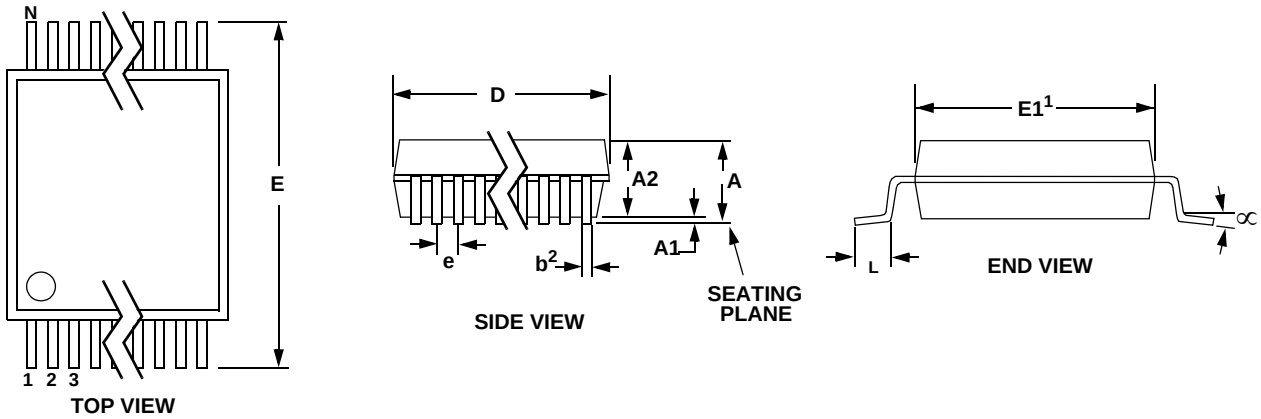


| | INCHES | | | MILLIMETERS | | | NOTE |
|---|---|---|---|---|---|---|---|
| DIM | MIN | NOM | MAX | MIN | NOM | MAX | |
| A | -- | -- | 0.043 | -- | -- | 1.10 | |
| A1 | 0.002 | 0.004 | 0.006 | 0.05 | -- | 0.15 | |
| A2 | 0.03346 | 0.0354 | 0.037 | 0.85 | 0.90 | 0.95 | |
| b | 0.00748 | 0.0096 | 0.012 | 0.19 | 0.245 | 0.30 | 2,3 |
| D | 0.193 | 0.1969 | 0.201 | 4.90 | 5.00 | 5.10 | 1 |
| E | 0.248 | 0.2519 | 0.256 | 6.30 | 6.40 | 6.50 | |
| E1 | 0.169 | 0.1732 | 0.177 | 4.30 | 4.40 | 4.50 | 1 |
| e | -- | 0.026 BSC | -- | -- | 0.65 BSC | -- | |
| L | 0.020 | 0.024 | 0.028 | 0.50 | 0.60 | 0.70 | |
| µ | 0° | 4° | 8° | 0° | 4° | 8° | |

***JEDEC #: MO-153***

*Controlling Dimension is Millimeters*

1. “D” and “E1” are reference datums and do not included mold flash or protrusions, but do include mold mismatch and are measured at the parting line, mold flash or protrusions shall not exceed 0.20 mm per side.
2. Dimension “b” does not include dambar protrusion/intrusion. Allowable dambar protrusion shall be 0.13 mm total in excess of “b” dimension at maximum material condition. Dambar intrusion shall not reduce dimension “b” by more than 0.07 mm at least material condition.
3. These dimensions apply to the flat section of the lead between 0.10 and 0.25 mm from lead tips.

## THERMAL CHARACTERISTICS

| Parameter | Symbol | Min | Typ | Max | Unit |
|---|---|---|---|---|---|
| Allowable Junction Temperature | | - | - | 135 | °C |
| Junction to Ambient Thermal Impedance | $\theta_{JA}$ | - | 75 | - | °C/W |

查询"CS5341-CZZR"供应商

# 7. ORDERING INFORMATION

| Product | Description | Package | Pb-Free | Grade | Temp Range | Container | Order # |
|---|---|---|---|---|---|---|---|
| CS5341 | 105 dB, 192 kHz, Multi-Bit Audio A/D Converter | 16-TSSOP | YES | Commercial | -10° to +70° C | Bulk | CS5341-CZZ |
| | | | | | | Tape & Reel | CS5341-CZZR |
| CS5341 | 105 dB, 192 kHz, Multi-Bit Audio A/D Converter | 16-TSSOP | YES | Automotive | -40° to +85° C | Bulk | CS5341-DZZ |
| | | | | | | Tape & Reel | CS5341-DZZR |
| CDB5341 | CS5341 Evaluation Board | - | - | - | - | - | CDB5341 |

# 8. REVISION HISTORY

| Release | Changes |
|---|---|
| A1 | Initial Advance release |
| A2 | Updated serial port timing specifications |
| PP1 | Change value of capacitors in analog input buffer diagram<br>Update Sample Rate range<br>Added Applications section on FILT+ filter capacitor<br>Add CS5341-CZZ as part number<br>Replace available part number CS5341-DZ with CS5341-DZZ<br>Initial Preliminary product release |
| PP2 | Add lead-free option to ordering information |
| F1 | Remove CS5341-CZ from Ordering Information<br>Redefine Serial Audio Port Switching Characteristics<br>Correct dimension “e” under Package Dimensions<br>Update maximum current and power specifications<br>Update Filt+ output impedance specification |

## Contacting Cirrus Logic Support

For all product questions and inquiries, contact a Cirrus Logic Sales Representative.
To find the one nearest to you, go to www.cirrus.com.

**IMPORTANT NOTICE**

Cirrus Logic, Inc. and its subsidiaries ("Cirrus") believe that the information contained in this document is accurate and reliable. However, the information is subject to change without notice and is provided "AS IS" without warranty of any kind (express or implied). Customers are advised to obtain the latest version of relevant information to verify, before placing orders, that information being relied on is current and complete. All products are sold subject to the terms and conditions of sale supplied at the time of order acknowledgment, including those pertaining to warranty, indemnification, and limitation of liability. No responsibility is assumed by Cirrus for the use of this information, including use of this information as the basis for manufacture or sale of any items, or for infringement of patents or other rights of third parties. This document is the property of Cirrus and by furnishing this information, Cirrus grants no license, express or implied under any patents, mask work rights, copyrights, trademarks, trade secrets or other intellectual property rights. Cirrus owns the copyrights associated with the information contained herein and gives consent for copies to be made of the information only for use within your organization with respect to Cirrus integrated circuits or other products of Cirrus. This consent does not extend to other copying such as copying for general distribution, advertising or promotional purposes, or for creating any work for resale.

CERTAIN APPLICATIONS USING SEMICONDUCTOR PRODUCTS MAY INVOLVE POTENTIAL RISKS OF DEATH, PERSONAL INJURY, OR SEVERE PROPERTY OR ENVIRONMENTAL DAMAGE (“CRITICAL APPLICATIONS”). CIRRUS PRODUCTS ARE NOT DESIGNED, AUTHORIZED OR WARRANTED FOR USE IN AIRCRAFT SYSTEMS, MILITARY APPLICATIONS, PRODUCTS SURGICALLY IMPLANTED INTO THE BODY, AUTOMOTIVE SAFETY OR SECURITY DEVICES, LIFE SUPPORT PRODUCTS OR OTHER CRITICAL APPLICATIONS. INCLUSION OF CIRRUS PRODUCTS IN SUCH APPLICATIONS IS UNDERSTOOD TO BE FULLY AT THE CUSTOMER’S RISK AND CIRRUS DISCLAIMS AND MAKES NO WARRANTY, EXPRESS, STATUTORY OR IMPLIED, INCLUDING THE IMPLIED WARRANTIES OF MERCHANTABILITY AND FITNESS FOR PARTICULAR PURPOSE, WITH REGARD TO ANY CIRRUS PRODUCT THAT IS USED IN SUCH A MANNER. IF THE CUSTOMER OR CUSTOMER’S CUSTOMER USES OR PERMITS THE USE OF CIRRUS PRODUCTS IN CRITICAL APPLICATIONS, CUSTOMER AGREES, BY SUCH USE, TO FULLY INDEMNIFY CIRRUS, ITS OFFICERS, DIRECTORS, EMPLOYEES, DISTRIBUTORS AND OTHER AGENTS FROM ANY AND ALL LIABILITY, INCLUDING ATTORNEYS’ FEES AND COSTS, THAT MAY RESULT FROM OR ARISE IN CONNECTION WITH THESE USES.

Cirrus Logic, Cirrus, and the Cirrus Logic logo designs are trademarks of Cirrus Logic, Inc. All other brand and product names in this document may be trademarks or service marks of their respective owners.

I²C is a registered trademark of Philips Semiconductor.