751 315

M/A-COM GREENPAR LIMITED Cambridge Road, Harlow, Essex. CM20 2ER

GREENPAR LIMITED

DO NOT SCALE IF IN DOUBT ASK

PART NUMBER	ISSUE
B67 N08	A

DESCRIPTION: PRINTED CIRCUIT SOCKET

SERIES: BT 43 | SK.NO.

SURFACE AREA | SCALE 2/1

MATERIAL

ALTERNATIVE MATERIAL

ORIGINAL SIZE A3

DRAWN MJW | DEV

CHECK A Smith | PROD

DATE 30·3·93 | Q.A.

GENERAL LIMITS (Unless stated otherwise)

All dimensions in mm

General tol. ±

Angles ± 1° Max. T.I.R.

GENERAL INSTRUCTIONS (Unless stated otherwise)

Machining limits ✓

All threads to STD 07-001

Burrs & sharp edges to STD 07-001

PIECE PART MATERIAL CHART.

PART DESCRIPTION.	MATERIAL. BRASS	BERYLLIUM COPPER	STAINLESS STEEL	SILICONE RUBBER	P.T.F.E.	OTHER
BODY.	✓					
MALE CONTACT.	✓					
FEMALE CONTACT.						
INSULATOR.					✓	
CLAMP NUT.						
PLAIN GASKET.						
HEX NUT.						
LOCKWASHER.						
CRIMP SLEEVE						
COUPLING NUT						

PLATING FINISHES.

√=STANDARD AVAILABLE FINISHES.	FINISH. E	H	J	G	W	Z	T

FINISH.	BODY.	CONTACT.	FINISH.	BODY.	CONTACT.
E	SILVER	SILVER	W	STAINLESS	GOLD
H	NICKEL	SILVER	Z*	STAINLESS	GOLD
G	GOLD	GOLD	T	GOLD	GOLD
J	NICKEL	GOLD			

*=Cable entry area is tinned for ease of soldering.

MOUNTING HOLES

SUFFIX	X dia

CABLE GROUPS.

CABLE GROUP.	DIMENSION. A	B

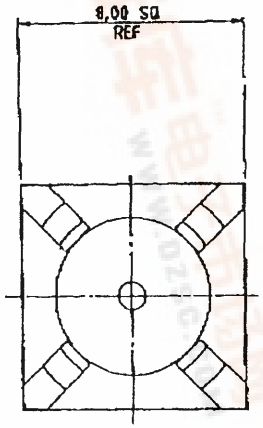

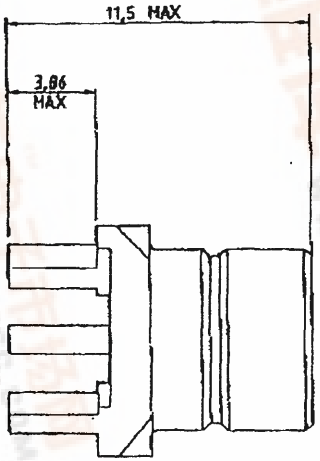

PRINTED CIRCUIT MOUNTING DETAILS.

N.T.S

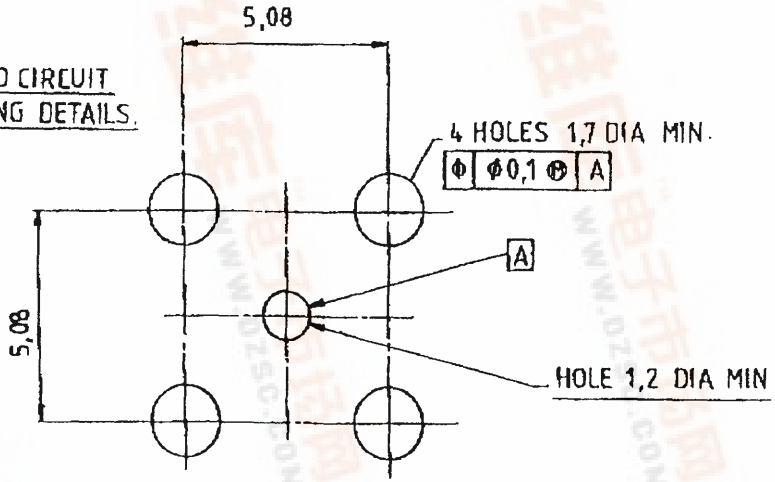

ENGINEERING DATA DRAWING

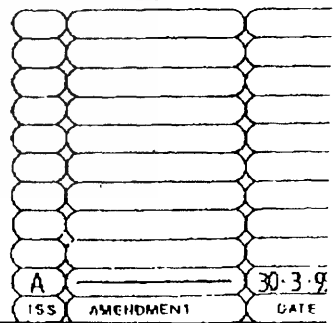

ISS	AMENDMENT	DATE
A		30·3·93

This drawing is the property of M/A-COM GREENPAR LIMITED and must not be disclosed to a third party without written permission

查询"0755-83251125-1"供应商 www.dzsc.com

找PDF 帮 pdf.dzsc.com