查询"74AC74MTCX"供应商

FAIRCHILD SEMICONDUCTOR™

November 1988
Revised November 1999

74AC74 • 74ACT74
Dual D-Type Positive Edge-Triggered Flip-Flop

General Description

The AC/ACT74 is a dual D-type flip-flop with Asynchronous Clear and Set inputs and complementary (Q, $\overline{Q}$) outputs. Information at the input is transferred to the outputs on the positive edge of the clock pulse. Clock triggering occurs at a voltage level of the clock pulse and is not directly related to the transition time of the positive-going pulse. After the Clock Pulse input threshold voltage has been passed, the Data input is locked out and information present will not be transferred to the outputs until the next rising edge of the Clock Pulse input.

Asynchronous Inputs:

LOW input to $\overline{S}_D$ (Set) sets Q to HIGH level

LOW input to $\overline{C}_D$ (Clear) sets Q to LOW level

Clear and Set are independent of clock

Simultaneous LOW on $\overline{C}_D$ and $\overline{S}_D$ makes both Q and $\overline{Q}$ HIGH

Features

- I_{CC} reduced by 50%
- Output source/sink 24 mA
- ACT74 has TTL-compatible inputs

Ordering Code:

Order Number	Package Number	Package Description
74AC74SC	M14A	14-Lead Small Outline Integrated Circuit (SOIC), JEDEC MS-120, 0.150" Narrow Body
74AC74SJ	M14D	14-Lead Small Outline Package (SOP), EIAJ TYPE II, 5.3mm Wide
74AC74MTC	MTC14	14-Lead Thin Shrink Small Outline Package (TSSOP), JEDEC MO-153, 4.4mm Wide
74AC74PC	N14A	14-Lead Plastic Dual-In-Line Package (PDIP), JEDEC MS-001, 0.300" Wide
74ACT74SC	M14A	14-Lead Small Outline Integrated Circuit (SOIC), JEDEC MS-120, 0.150" Narrow Body
74ACT74SJ	M14D	14-Lead Small Outline Package (SOP), EIAJ TYPE II, 5.3mm Wide
74ACT74MTC	MTC14	14-Lead Thin Shrink Small Outline Package (TSSOP), JEDEC MO-153, 4.4mm Wide
74ACT74PC	N14A	14-Lead Plastic Dual-In-Line Package (PDIP), JEDEC MS-001, 0.300" Wide

Device also available in Tape and Reel. Specify by appending suffix letter "X" to the ordering code.

Connection Diagram

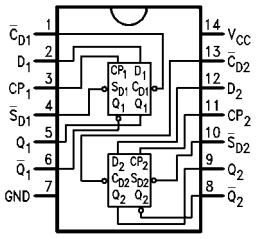

Pin Descriptions

Pin Names	Description
D_1, D_2	Data Inputs
CP_1, CP_2	Clock Pulse Inputs
$\overline{C}_{D1}$, $\overline{C}_{D2}$	Direct Clear Inputs
$\overline{S}_{D1}$, $\overline{S}_{D2}$	Direct Set Inputs
Q_1, $\overline{Q}_1$, Q_2, $\overline{Q}_2$	Outputs

FACT™ is a trademark of Fairchild Semiconductor Corporation.

© 1999 Fairchild Semiconductor Corporation

查询"74AC74MTCX"供应商

Logic Symbols

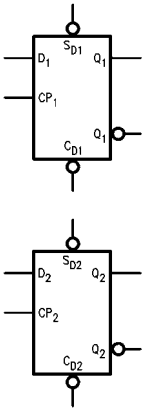

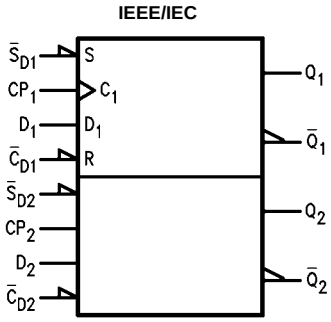

Truth Table

(Each Half)

Inputs				Outputs	
$\overline{S}_D$	$\overline{C}_D$	CP	D	Q	$\overline{Q}$
L	H	X	X	H	L
H	L	X	X	L	H
L	L	X	X	H	H
H	H	↗	H	H	L
H	H	↗	L	L	H
H	H	L	X	Q_0	$\overline{Q}_0$

H = HIGH Voltage Level
L = LOW Voltage Level
X = Immaterial
↗ = LOW-to-HIGH Clock Transition
Q_0 ($\overline{Q}_0$) = Previous Q ($\overline{Q}$) before LOW-to-HIGH Transition of Clock

Logic Diagram

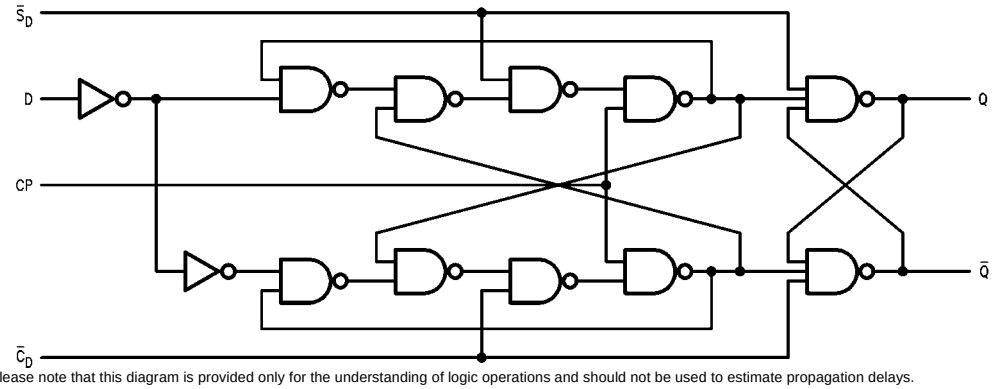

Please note that this diagram is provided only for the understanding of logic operations and should not be used to estimate propagation delays.

查询"74AC74MTCX"供应商

Absolute Maximum Ratings(Note 1)

Supply Voltage (V_{CC})	−0.5V to +7.0V
DC Input Diode Current (I_{IK})	
$V_I = -0.5V$	−20 mA
$V_I = V_{CC} + 0.5V$	+20 mA
DC Input Voltage (V_I)	−0.5V to V_{CC} + 0.5V
DC Output Diode Current (I_{OK})	
$V_O = -0.5V$	−20 mA
$V_O = V_{CC} + 0.5V$	+20 mA
DC Output Voltage (V_O)	−0.5V to V_{CC} + 0.5V
DC Output Source or Sink Current (I_O)	±50 mA
DC V_{CC} or Ground Current per Output Pin (I_{CC} or I_{GND})	±50 mA
Storage Temperature (T_{STG})	−65°C to +150°C
Junction Temperature (T_J)	
PDIP	140°C

Recommended Operating Conditions

Supply Voltage (V_{CC})	
AC	2.0V to 6.0V
ACT	4.5V to 5.5V
Input Voltage (V_I)	0V to V_{CC}
Output Voltage (V_O)	0V to V_{CC}
Operating Temperature (T_A)	−40°C to +85°C
Minimum Input Edge Rate (ΔV/Δt)	
AC Devices	
V_{IN} from 30% to 70% of V_{CC}	
V_{CC} @ 3.3V, 4.5V, 5.5V	125 mV/ns
Minimum Input Edge Rate (ΔV/Δt)	
ACT Devices	
V_{IN} from 0.8V to 2.0V	
V_{CC} @ 4.5V, 5.5V	125 mV/ns

Note 1: Absolute maximum ratings are those values beyond which damage to the device may occur. The databook specifications should be met, without exception, to ensure that the system design is reliable over its power supply, temperature, and output/input loading variables. Fairchild does not recommend operation of FACT™ circuits outside databook specifications.

DC Electrical Characteristics for AC

Symbol	Parameter	V_{CC} (V)	T_A = +25°C Typ	T_A = +25°C Guaranteed Limits	T_A = −40°C to +85°C Guaranteed Limits	Units	Conditions
V_{IH}	Minimum HIGH Level Input Voltage	3.0	1.5	2.1	2.1	V	V_{OUT} = 0.1V or V_{CC} − 0.1V
		4.5	2.25	3.15	3.15		
		5.5	2.75	3.85	3.85		
V_{IL}	Maximum LOW Level Input Voltage	3.0	1.5	0.9	0.9	V	V_{OUT} = 0.1V or V_{CC} − 0.1V
		4.5	2.25	1.35	1.35		
		5.5	2.75	1.65	1.65		
V_{OH}	Minimum HIGH Level Output Voltage	3.0	2.99	2.9	2.9	V	I_{OUT} = −50 µA
		4.5	4.49	4.4	4.4		
		5.5	5.49	5.4	5.4		
						V	$V_{IN} = V_{IL}$ or V_{IH}
		3.0		2.56	2.46		I_{OH} = −12 mA
		4.5		3.86	3.76		I_{OH} = −24 m
		5.5		4.86	4.76		I_{OH} = −24 m (Note 2)
V_{OL}	Maximum LOW Level Output Voltage	3.0	0.002	0.1	0.1	V	I_{OUT} = 50 µA
		4.5	0.001	0.1	0.1		
		5.5	0.001	0.1	0.1		
						V	$V_{IN} = V_{IL}$ or V_{IH}
		3.0		0.36	0.44		I_{OL} = 12 mA
		4.5		0.36	0.44		I_{OL} = 24 mA
		5.5		0.36	0.44		I_{OL} = 24 mA (Note 2)
I_{IN} (Note 4)	Maximum InputLeakage Current	5.5		± 0.1	± 1.0	µA	$V_I = V_{CC}$, GND
I_{OLD}	Minimum Dynamic	5.5			75	mA	V_{OLD} = 1.65V Max
I_{OHD}	Output Current (Note 3)	5.5			−75	mA	V_{OHD} = 3.85V Min
I_{CC} (Note 4)	Maximum Quiescent Supply Current	5.5		2.0	20.0	µA	$V_{IN} = V_{CC}$ or GND

Note 2: All outputs loaded; thresholds on input associated with output under test.

Note 3: Maximum test duration 2.0 ms, one output loaded at a time.

Note 4: I_{IN} and I_{CC} @ 3.0V are guaranteed to be less than or equal to the respective limit @ 5.5V V_{CC}.

查询"74AC74MTCX"供应商

DC Electrical Characteristics for ACT

Symbol	Parameter	V_{CC} (V)	$T_A = +25°C$ Typ	$T_A = +25°C$ Guaranteed Limits	$T_A = -40°C$ to $+85°C$ Guaranteed Limits	Units	Conditions
V_{IH}	Minimum HIGH Level Input Voltage	4.5	1.5	2.0	2.0	V	$V_{OUT} = 0.1V$ or $V_{CC} - 0.1V$
		5.5	1.5	2.0	2.0		
V_{IL}	Maximum LOW Level Output Voltage	4.5	1.5	0.8	0.8	V	$V_{OUT} = 0.1V$ or $V_{CC} - 0.1V$
		5.5	1.5	0.8	0.8		
V_{OH}	Minimum HIGH Level Output Voltage	4.5	4.49	4.4	4.4	V	$I_{OUT} = -50\ \mu A$
		5.5	5.49	5.4	5.4		
		4.5		3.86	3.76	V	$V_{IN} = V_{IL}$ or V_{IH} $I_{OH} = -24$ mA
		5.5		4.86	4.76		$I_{OH} = -24$ mA (Note 5)
V_{OL}	Maximum LOW Level Output Voltage	4.5	0.001	0.1	0.1	V	$I_{OUT} = 50\ \mu A$
		5.5	0.001	0.1	0.1		
		4.5		0.36	0.44	V	$V_{IN} = V_{IL}$ or V_{IH} $I_{OL} = 24$ mA
		5.5		0.36	0.44		$I_{OL} = 24$ mA (Note 5)
I_{IN}	Maximum Input Leakage Current	5.5		±0.1	±1.0	µA	$V_I = V_{CC}$, GND
I_{CCT}	Maximum I_{CC}/Input	5.5	0.6		1.5	mA	$V_I = V_{CC} - 2.1V$
I_{OLD}	Minimum Dynamic Output Current (Note 6)	5.5			75	mA	$V_{OLD} = 1.65V$ Max
I_{OHD}		5.5			−75	mA	$V_{OHD} = 3.85V$ Min
I_{CC}	Maximum Quiescent Supply Current	5.5		2.0	20.0	µA	$V_{IN} = V_{CC}$ or GND

Note 5: All outputs loaded; thresholds on input associated with output under test.

Note 6: Maximum test duration 2.0 ms, one output loaded at a time.

AC Electrical Characteristics for AC

Symbol	Parameter	V_{CC} (V) (Note 7)	$T_A = +25°C$, $C_L = 50$ pF Min	Typ	Max	$T_A = -40°C$ to $+85°C$, $C_L = 50$ pF Min	Max	Units
f_{MAX}	Maximum Clock Frequency	3.3	100	125		95		MHz
		5.0	140	160		125		
t_{PLH}	Propagation Delay $\overline{C}_{Dn}$ or $\overline{S}_{Dn}$ to Q_n or $\overline{Q}_n$	3.3	3.5	8.0	12.0	2.5	13.0	ns
		5.0	2.5	6.0	9.0	2.0	10.0	
t_{PHL}	Propagation Delay $\overline{C}_{Dn}$ or $\overline{S}_{Dn}$ to Q_n or $\overline{Q}_n$	3.3	4.0	10.5	12.0	3.5	13.5	ns
		5.0	3.0	8.0	9.5	2.5	10.5	
t_{PLH}	Propagation Delay CP_n to Q_n or $\overline{Q}_n$	3.3	4.5	8.0	13.5	4.0	16.0	ns
		5.0	3.5	6.0	10.0	3.0	10.5	
t_{PHL}	Propagation Delay CP_n to Q_n or $\overline{Q}_n$	3.3	3.5	8.0	14.0	3.5	14.5	ns
		5.0	2.5	6.0	10.0	2.5	10.5	

Note 7: Voltage Range 3.3 is 3.3V ± 0.3V
Voltage Range 5.0 is 5.0V ± 0.5V

查询"74AC74MTCX"供应商

AC Operating Requirements for AC

Symbol	Parameter	V_{CC} (V) (Note 8)	$T_A = +25°C$ $C_L = 50$ pF Typ	$T_A = +25°C$ $C_L = 50$ pF Guaranteed Minimum	$T_A = -40°C$ to $+85°C$ $C_L = 50$ pF Guaranteed Minimum	Units
t_S	Set-up Time, HIGH or LOW	3.3	1.5	4.0	4.5	ns
	D_n to CP_n	5.0	1.0	3.0	3.0	
t_H	Hold Time, HIGH or LOW	3.3	–2.0	0.5	0.5	ns
	D_n to CP_n	5.0	–1.5	0.5	0.5	
t_W	CP_n or $\overline{C}_{Dn}$ or $\overline{S}_{Dn}$	3.3	3.0	5.5	7.0	ns
	Pulse Width	5.0	2.5	4.5	5.0	
t_{rec}	Recovery Time	3.3	–2.5	0	0	ns
	$\overline{C}_{Dn}$ or $\overline{S}_{Dn}$ to CP	5.0	–2.0	0	0	

Note 8: Voltage Range 3.3 is 3.3V ± 0.3V
Voltage Range 5.0 is 5.0V ± 0.5V

AC Electrical Characteristics for ACT

Symbol	Parameter	V_{CC} (V) (Note 9)	$T_A = +25°C$ $C_L = 50$ pF Min	Typ	Max	$T_A = -40°C$ to $+85°C$ $C_L = 50$ pF Min	Max	Units
f_{MAX}	Maximum Clock Frequency	5.0	145	210		125		MHz
t_{PLH}	Propagation Delay $\overline{C}_{Dn}$ or $\overline{S}_{Dn}$ to Q_n or $\overline{Q}_n$	5.0	3.0	5.5	9.5	2.5	10.5	ns
t_{PHL}	Propagation Delay $\overline{C}_{Dn}$ or $\overline{S}_{Dn}$ to Q_n or $\overline{Q}_n$	5.0	3.0	6.0	10.0	3.0	11.5	ns
t_{PLH}	Propagation Delay CP_n to Q_n or $\overline{Q}_n$	5.0	4.0	7.5	11.0	4.0	13.0.	ns
t_{PHL}	Propagation Delay CP_n to Q_n or $\overline{Q}_n$	5.0	3.5	6.0	10.0	3.0	11.5	ns

Note 9: Voltage Range 5.0 is 5.0V ± 0.5V

AC Operating Requirements for ACT

Symbol	Parameter	V_{CC} (V) (Note 10)	$T_A = +25°C$ $C_L = 50$ pF Typ	$T_A = +25°C$ $C_L = 50$ pF Guaranteed Minimum	$T_A = -40°C$ to $+85°C$ $C_L = 50$ pF Guaranteed Minimum	Units
t_S	Set-up Time, HIGH or LOW D_n to CP_n	5.0	1.0	3.0	3.5	ns
t_H	Hold Time, HIGH or LOW D_n to CP_n	5.0	–0.5	1.0	1.0	ns
t_W	CP_n or $\overline{C}_{Dn}$ or $\overline{S}_{Dn}$ Pulse Width	5.0	3.0	5.0	6.0	ns
t_{rec}	Recovery Time $\overline{C}_{Dn}$ or $\overline{S}_{Dn}$ to CP	5.0	–2.5	0	0	ns

Note 10: Voltage Range 5.0 is 5.0V ± 0.5V

Capacitance

Symbol	Parameter	Typ	Units	Conditions
C_{IN}	Input Capacitance	4.5	pF	V_{CC} = OPEN
C_{PD}	Power Dissipation Capacitance	35.0	pF	V_{CC} = 5.0V

查询"74AC74MTCX"供应商

Physical Dimensions inches (millimeters) unless otherwise noted

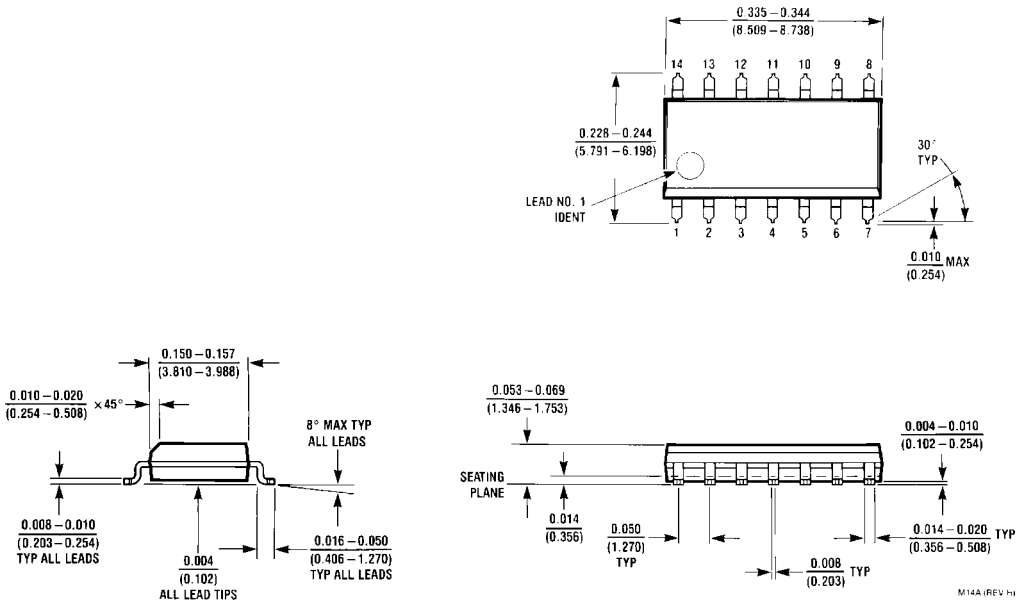

14-Lead Small Outline Integrated Circuit (SOIC), JEDEC MS-120, 0.150” Narrow Body
Package Number M14A

查询"74AC74MTCX"供应商

Physical Dimensions inches (millimeters) unless otherwise noted (Continued)

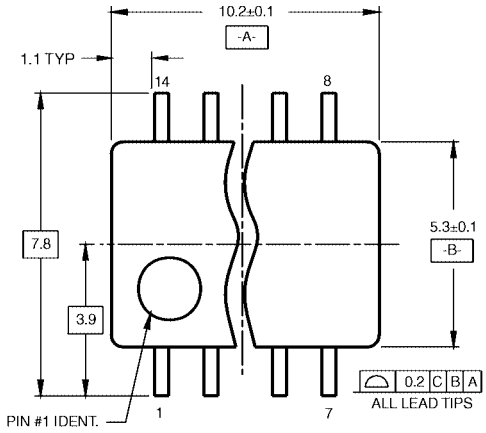

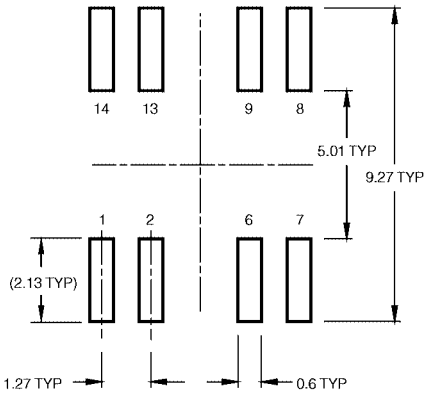

LAND PATTERN RECOMMENDATION

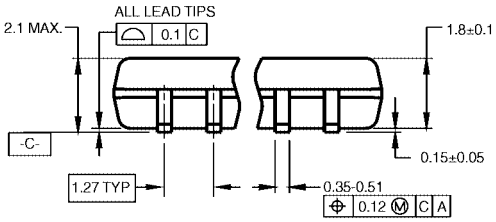

DIMENSIONS ARE IN MILLIMETERS

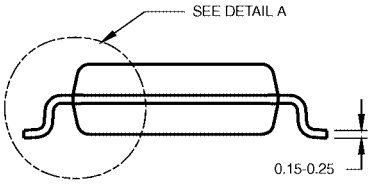

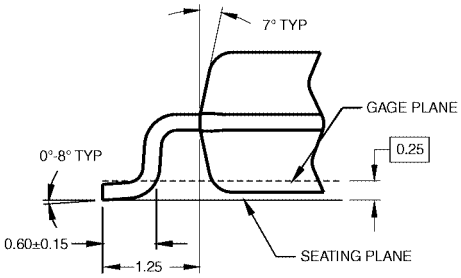

DETAIL A

NOTES:

A. CONFORMS TO EIAJ EDR-7320 REGISTRATION, ESTABLISHED IN DECEMBER, 1998.

B. DIMENSIONS ARE IN MILLIMETERS.

C. DIMENSIONS ARE EXCLUSIVE OF BURRS, MOLD FLASH, AND TIE BAR EXTRUSIONS.

M14DRevB1

14-Lead Small Outline Package (SOP), EIAJ TYPE II, 5.3mm Wide
Package Number M14D

查询"74AC74MTCX"供应商

Physical Dimensions inches (millimeters) unless otherwise noted (Continued)

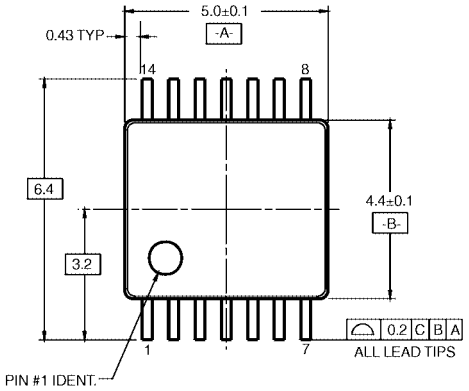

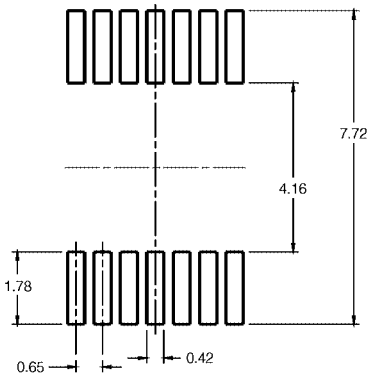

LAND PATTERN RECOMMENDATION

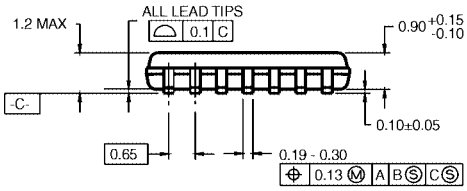

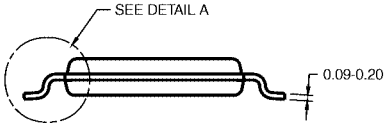

NOTES:

A. CONFORMS TO JEDEC REGISTRATION MO-153, VARIATION AB, REF NOTE 6, DATE 7/93.

B. DIMENSIONS ARE IN MILLIMETERS.

C. DIMENSIONS ARE EXCLUSIVE OF BURRS, MOLD FLASH, AND TIE BAR EXTRUSIONS.

D. DIMENSIONS AND TOLERANCES PER ANSI Y14.5M, 1982.

MTC14RevC3

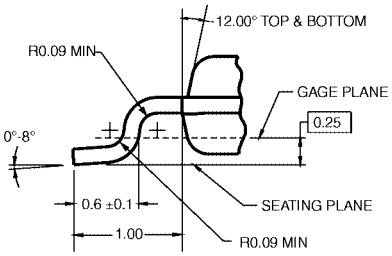

DETAIL A

14-Lead Thin Shrink Small Outline Package (TSSOP), JEDEC MO-153, 4.4mm Wide
Package Number MTC14

查询"74AC74MTCX"供应商

Physical Dimensions inches (millimeters) unless otherwise noted (Continued)

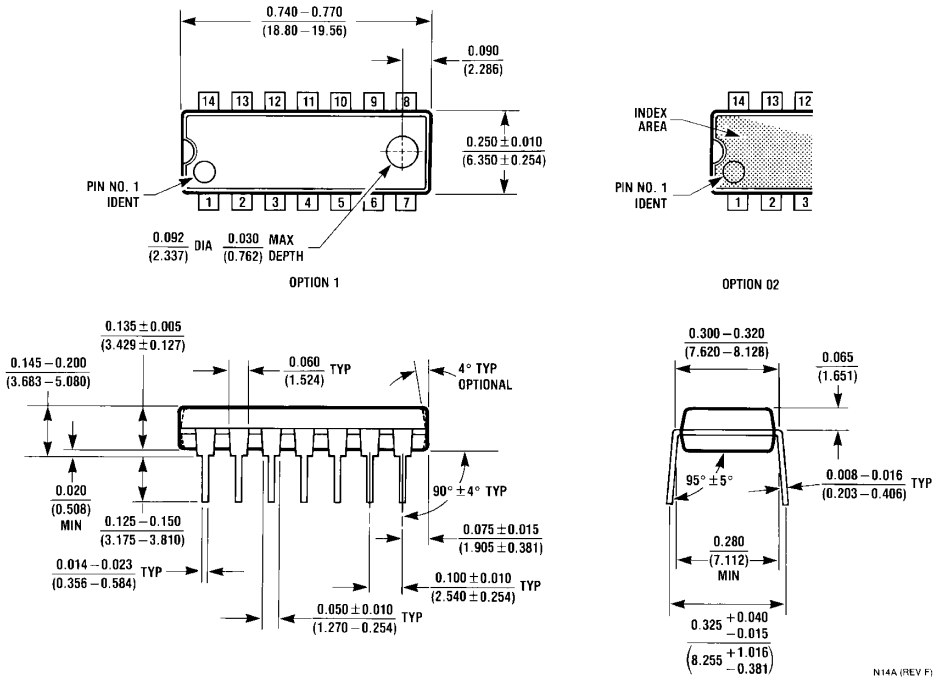

14-Lead Plastic Dual-In-Line Package (PDIP), JEDEC MS-001, 0.300" Wide
Package Number N14A

Fairchild does not assume any responsibility for use of any circuitry described, no circuit patent licenses are implied and Fairchild reserves the right at any time without notice to change said circuitry and specifications.

LIFE SUPPORT POLICY

FAIRCHILD'S PRODUCTS ARE NOT AUTHORIZED FOR USE AS CRITICAL COMPONENTS IN LIFE SUPPORT DEVICES OR SYSTEMS WITHOUT THE EXPRESS WRITTEN APPROVAL OF THE PRESIDENT OF FAIRCHILD SEMICONDUCTOR CORPORATION. As used herein:

1. Life support devices or systems are devices or systems which, (a) are intended for surgical implant into the body, or (b) support or sustain life, and (c) whose failure to perform when properly used in accordance with instructions for use provided in the labeling, can be reasonably expected to result in a significant injury to the user.
2. A critical component in any component of a life support device or system whose failure to perform can be reasonably expected to cause the failure of the life support device or system, or to affect its safety or effectiveness.

www.fairchildsemi.com