767 396

查询"1060000000"供应商

50 x 45 x 30 mm

CA-020 Aluminium enclosure

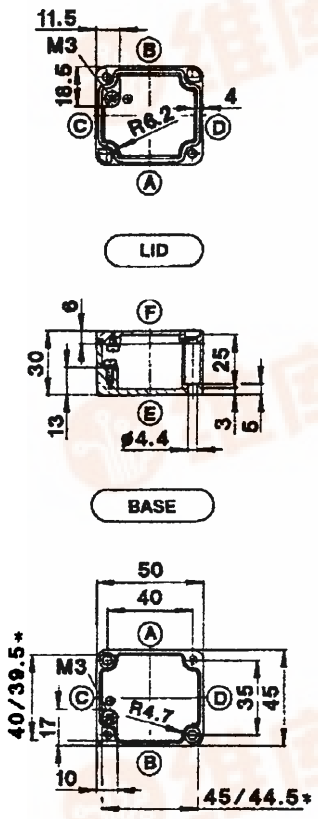

* minimum dimensions of mounting plate support

type		CA-020
weight	(g)	70
external dimensions	(mm)	50 x 45 x 30
complete enclosures		**Part No.**
coated, with gasket and lid screws		**102.0.0000.00** ●
coated, with gasket and quick release screws		—
coated, with gasket and hex.socket head screws		—
coated, with silicone gasket and lid screws		—
coated, with HF gasket and lid screws		—
saltwater-proof coating, with gasket and lid screws		**102.0.0100.00**
saltwater-proof coating, passivated, lid screws with gasket		**102.0.0060.00**
unwashed, unpainted, no accessories		**102.0.0340.00**
accessories (separate or as a mounting set)		
mounting plate		—
TS mounting rail		—
TS mounting rail		—
grounding rail		—
external attachment brackets		—
external hinges **		—
internal hinges, flexible, for quick-release enclosures		—
internal hinges with lid guiding **		—
silicone gasket for wider temperature range (piece goods)		—

max. PG threads										
PG	7	9	11	13.5	16	21	29	36	42	48
side A / B	2	1	1	—	—	—	—	—	—	—
side C / D	1	1	—	—	—	—	—	—	—	—

** mechanical enclosure machining required ● = kept in stock

58 x 64 x 36 mm

CA-060 Aluminium enclosure

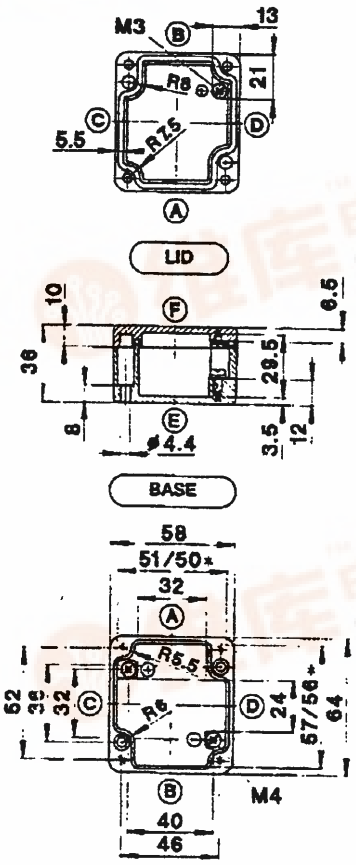

* minimum dimensions of mounting plate support

type		CA-060
weight	(g)	160
external dimensions	(mm)	58 x 64 x 36
complete enclosures		**Part No.**
coated, with gasket and lid screws		**106.0.0000.00** ●
coated, with gasket and quick release screws		—
coated, with gasket and hex.socket head screws		—
coated, with silicone gasket and lid screws		**106.0.0940.00**
coated, with HF gasket and lid screws		**106.0.0080.00**
saltwater-proof coating, with gasket and lid screws		**106.0.0100.00**
saltwater-proof coating, passivated, lid screws with gasket		**106.0.0060.00**
unwashed, unpainted, no accessories		**106.0.0380.00**
accessories (separate or as a mounting set)		
mounting plate		**951.1.0010.00** ●
TS 35 mounting rail		**982.0.0000.00** ●
TS mounting rail		—
grounding rail		—
external attachment brackets		—
external hinges **		—
internal hinges, flexible, for quick-release enclosures		—
internal hinges with lid guiding **		—
silicone gasket for wider temperature range (piece goods)		**923.1.0050.00** ●

max. PG threads										
PG	7	9	11	13.5	16	21	29	36	42	48
side A / B	2	1	1	1	—	—	—	—	—	—
side C / D	1	1	1	1	—	—	—	—	—	—

** mechanical enclosure machining required ● = kept in stock

找PDF 维库一下 pdf.dzsc.com