DRAWING IS UNPUBLISHED. RELEASED FOR PUBLICATION 20
COPYRIGHT 20 BY TYCO ELECTRONICS CORPORATION. ALL RIGHTS RESERVED.

LOC	DIST
E	B

REVISIONS

P	LTR	DESCRIPTION	DATE	DWN	APVD
	1	FIRST ISSUE	21DEC00	JJ	

查询"1337815-2"供应商

ITEM NO	PART NUMBER	DESCRIPTION	QTY/ ASSY
1	1-1337597-0	50 ohm SMB PLUG - GOLD/GOLD	2
2	1337768-1	SHRINK SLEEVE	A/R
3	1337715-5	RG174A/U CABLE	A/R

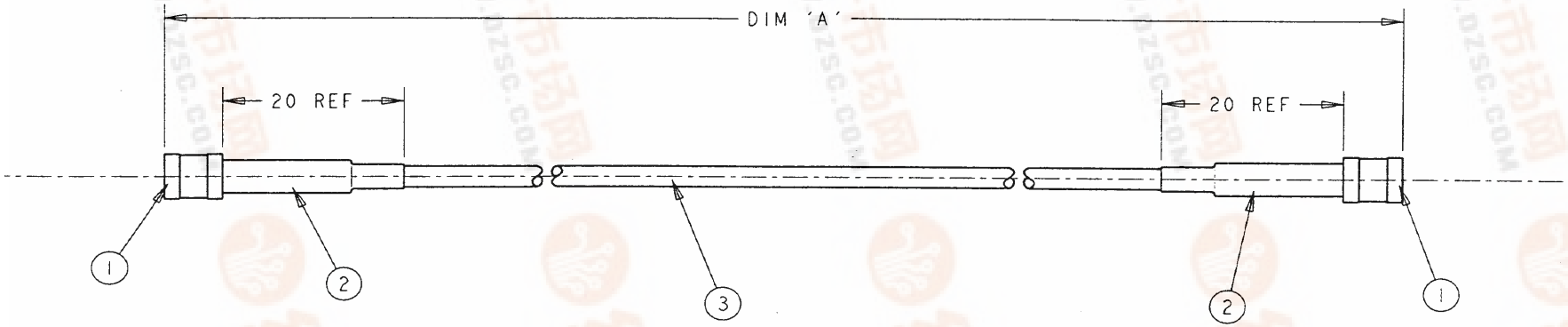

Approved Drawing To follow.

1000 ±25	1337815-3
500 ±12	1337815-2
250 ±10	1337815-1
DIM 'A'	AMP PART NUMBER

THIS DRAWING IS A CONTROLLED DOCUMENT FOR TYCO ELECTRONICS CORPORATION. IT IS SUBJECT TO CHANGE AND THE CONTROLLING ENGINEERING ORGANIZATION SHOULD BE CONTACTED FOR THE LATEST REVISION.

DIMENSIONS: mm

TOLERANCES UNLESS OTHERWISE SPECIFIED:

0 PLC	±-
1 PLC	±0.1
2 PLC	±0.01
3 PLC	±0.001
4 PLC	±0.0001
ANGLES	±-

MATERIAL -

FINISH -

DWN	R CHURCHILL 21DEC2000
CHK	D CHICK 21DEC2000
APVD	J JEWELL 21DEC2000
PRODUCT SPEC	-
APPLICATION SPEC	-
WEIGHT	-

tyco Electronics

AMP of Great Britain Ltd., Stanmore, Middlesex, HA7 4RS.

NAME: SMB PLUG - SMB PLUG CABLE ASSEMBLY -

SIZE	CAGE CODE	DRAWING NO	RESTRICTED TO
A3	00779	C-1337815	-

CUSTOMER DRAWING | SCALE NTS | SHEET 1 OF 1 | REV 1