查询"1110-F112-P1M1-0-5A"供应商

2-6200-...	2-6400-...
flange mounting, with auxiliary contacts, with manual release option	threadneck panel mounting, with auxiliary contacts
AC 250 V; DC 28 V	AC 250 V; DC 28 V
0.05...16 A	0.05...16 A
1A, AC 250 V; DC 28 V	1A, AC 250 V; DC 28 V
5,000 operations at 2 x I_N	5,000 operations at 2 x I_N
10 x rated current	10 x rated current
VDE, CSA, UL, Demko, Semko	VDE, CSA, UL, Demko, Semko
see pages 89 - 92	see pages 89-92
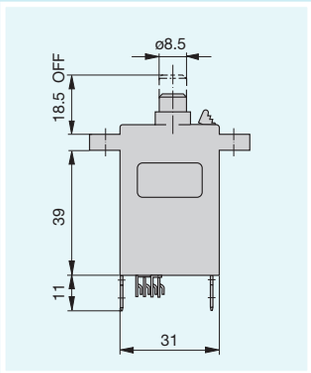	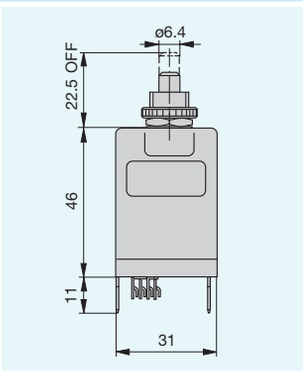
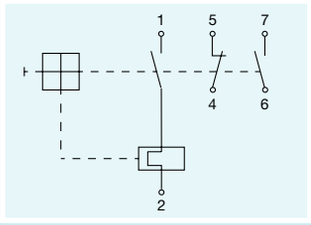	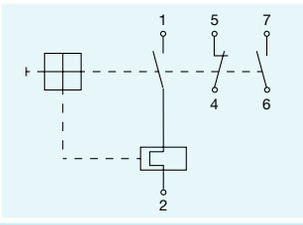

查询"1110-F112-P1M1-0-5A"供应商

Accessories

Mounting nut 3/8", 27-thread
Y 306 671 01

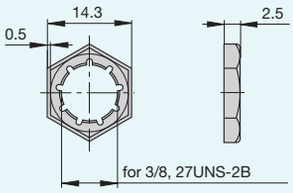

Mounting nut 7/16", 28-thread
Y 303 200 01

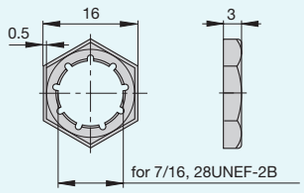

Knurled nut 3/8", 27-thread
nickel-plated brass
Y 300 190 03

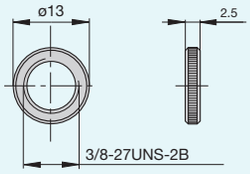

Knurled nut 7/16", 28-thread
nickel-plated brass
Y 302 294 03

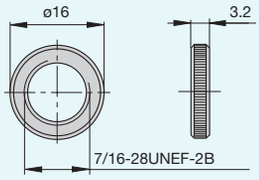

Hex nut 3/8", 27-thread
nickel-plated brass
Y 300 192 01

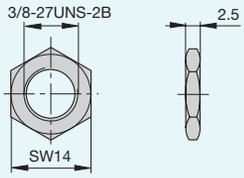

Hex nut 7/16", 28-thread
nickel-plated brass
Y 302 295 01

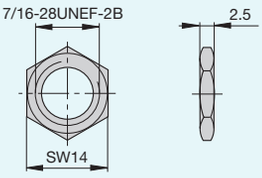

Press to Reset Plate for 3/8",
27-thread, aluminium
Y 301 059 02

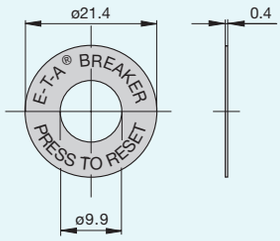

Press to Reset Plate for 7/16",
28-thread, aluminium
Y 302 732 01

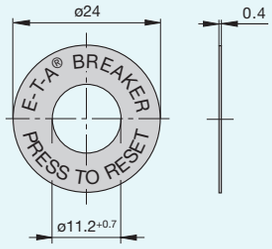

Press to Reset Plate for 3/8", 27-thread
plastic
Y 303 051 01

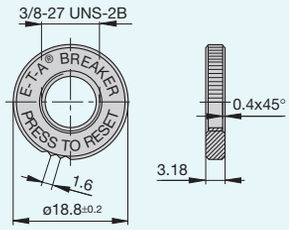

Reset button seal for 3/8", 27-thread
short
X 201 285 01

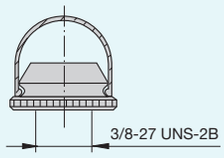

long
X 200 799 01

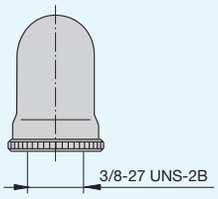

Version with 7/16", 28-thread to special order

1

E-T-A Thermal-Magnetic Circuit Breaker E2210-...

查询"1110-F112-P1M1-0-5A"供应商

Description

Thermal-magnetic circuit breaker mounted on Euro Card for 19" rack mounting, with one Euro Card accommodating one or two single pole, double pole or three pole circuit breakers. Convenient toggle actuation enables series 2210 additionally to be used as an ON/OFF switch. A red LED is located in the front frame of the Euro Card, indicating the switching status of the circuit breaker (via the auxiliary circuit).

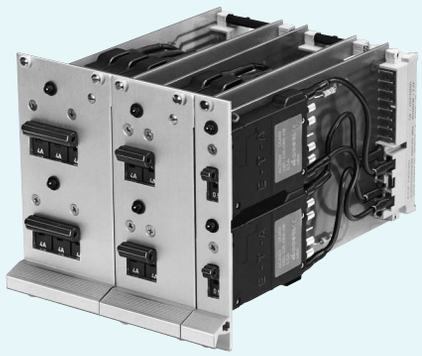

E2210-...

Typical applications

Process control, measuring and control systems, telecommunications.

Technical data

Circuit breaker	
Main circuit:	
voltage rating	3 AC 433V; AC 250 V (50/60 Hz); DC 65 V
current rating range	0.1...16 A
Standard current ratings	0.1 0.2 0.3 0.4 0.5 0.6 0.8 A 1 1.5 2 2.5 3 4 5 A 6 8 10 12 16 A
Auxiliary circuit:	
voltage rating	AC 240 V; DC 65 V
current rating	1 A
Other data	see type 2210-S2..

Front plate		
Dimensions (1 TE = 5.08 mm, 1 HE = 44.45 mm)		
Width:	one single pole circuit breaker	4 TE
	one double pole circuit breaker	6 TE
	one three pole circuit breaker	9 TE
	two single pole circuit breakers	4 TE
	two double pole circuit breakers	10 TE
	two three pole circuit breakers	12 TE
Height:		3 HE
Material:	aluminium, anodized	

LED	
Voltage rating	DC 24 V / DC 60 V

2

E-T-A Thermal-Magnetic Circuit Breaker 2210-S291-P9M2-410005-...A

查询"1110-F112-P1M1-0-5A"供应商

Description

Single pole thermal-magnetic circuit breaker with trip-free, snap action mechanism and toggle actuation. Two-chamber construction with cascade contact arrangement to provide high voltage DC capability and high switching performance. Designed for plug-in mounting in distribution rails X 2210-S0606J, X2210-K... or terminal blocks 23-P10-Si-202005 and 63-P10-Si-202005.

Typical applications

Communications systems, power supplies, process control equipment.

2210-S291-P9M2-410005-... A

Accessories

23-P10-Si-202005	Lug mounted socket which accommodates one single pole two-chamber type 2210 circuit breakers. With push-on terminals.
63-P10-Si-202005	Lug mounted socket which accommodates 3 single pole two-chamber type 2210 circuit breakers. With push-on terminals.
X 2210-S0606J	Terminal rail
X 2210-KA303 E	3-way terminal blocks
X 2210-K0404 E	4-way terminal blocks
X 2210-K0505 E	5-way terminal blocks
X 2210-K0606 E	6-way terminal blocks
X 2210-K0707 E	7-way terminal blocks
X 2210-K0808 E	8-way terminal blocks
X 2210-K0909 E	9-way terminal blocks
X 211 018 01	Tool to aid withdrawal of circuit breakers from terminal blocks.

Standard current ratings and typical internal resistance values

Current rating (A)	Internal resistance (Ω)	Current rating (A)	Internal resistance (Ω)
0.4	6.87	6	0.09
0.65	2.96	8	0.03
1	1.84	10	0.03
1.6	0.75	12	0.02
2	0.50	16	< 0.02
2.5	0.35	20*	< 0.02
3	0.25	25*	< 0.02
4	0.15	*80% I_N continuous load	

Approvals

Authority	Voltage ratings	Current ratings
VDE (EN 60934)	AC 250 V, DC 65 V	0.4...25A
Demko/Semko	AC 250 V, DC 65 V	0.4...16 A
CSA/UL	AC 250 V, DC 65 V	0.4...25 A

Technical data

Voltage rating	AC 250V; DC 65V
Current rating range	0.4...25 A
Auxiliary circuit	1 A, AC 240 V/DC 65 V
Typical life	> 10,000 operations at 1 x I_N > 20,000 operations mechanical
Ambient temperature	-30°C...+60 °C
Insulation co-ordination (IEC 664 and 664A)	Rated impulse withstand voltage 2.5 kV; Pollution degree 2 reinforced insulation in operating area
Dielectric strength (IEC 664 and 664A) operating area main to aux. circuit	Test voltage AC 3000 V AC 1500 V
Insulation resistance	> 100 MΩ (DC 500 V)
Interrupting capacity I_{cn}	AC 250 V cosφ = 0.8 0.4...1 A self-limiting 1.6...25 A 2000 A DC 65 V L/R = 4 ms 0.4...4 A self-limiting 6...25 A 3500 A
Degree of protection (IEC 529/DIN 40050)	operating area IP 30 terminal area IP 00
Vibration	5 g (57-500 Hz), ± 0.38 mm (10-57 Hz); to IEC 68-2-6, Test Fc 10 frequency cycles/axis
Shock	25 g (11ms) directions 1, 2, 3, 4, 5 20 g (11 ms) direction 6 to IEC 68-2-27, Test Ea
Corrosion	96 hours in 5 % salt mist to IEC 68-2-11, Test Ka
Humidity	240 hours at 95 % RH to IEC 68-2-3, Test Ca
Mass	approx. 80 g

2

查询"1110-F112-P1M1-0-5A"供应商

Typical time/current characteristics

Time/current characteristics are calibrated at 23°C (see page 8). For operation at other temperatures please apply the factors below to determine the circuit breaker rating required.

Ambient temperature °C	-30	-20	-10	0	+10	+20	+30	+40	+50	+60
Multiplication factor	0.76	0.79	0.83	0.88	0.93	1	1.04	1.11	1.19	1.29

N.B.
*Magnetic tripping currents are increased by 30% on DC supplies.

-F1 0.05...6 A DC

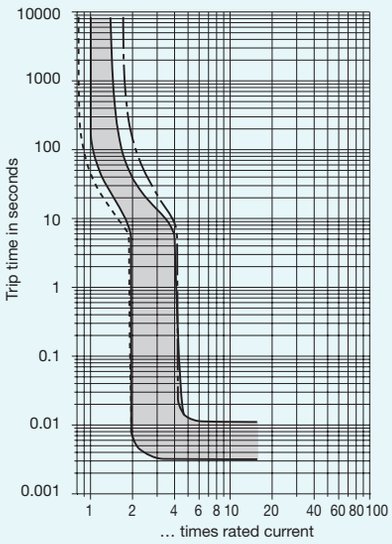

-F1 8...10 A DC

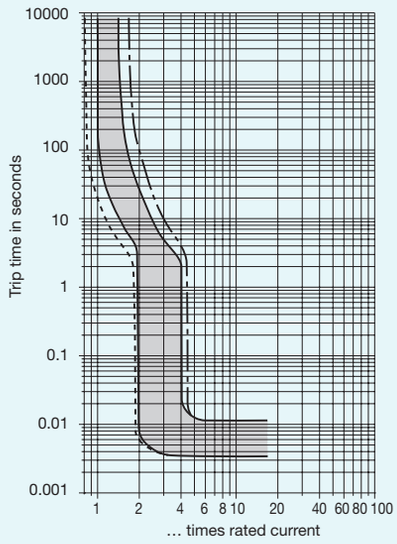

-M1 0.05...6 A AC*

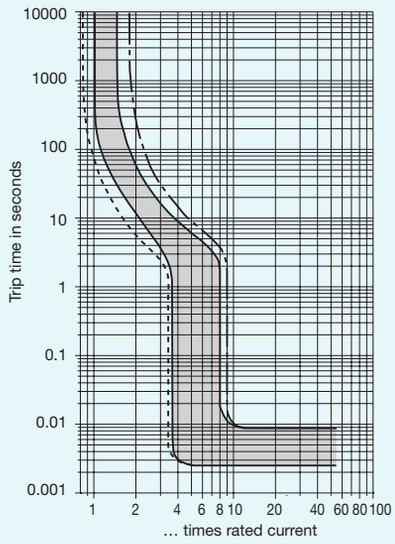

-M1 8...10 A AC*

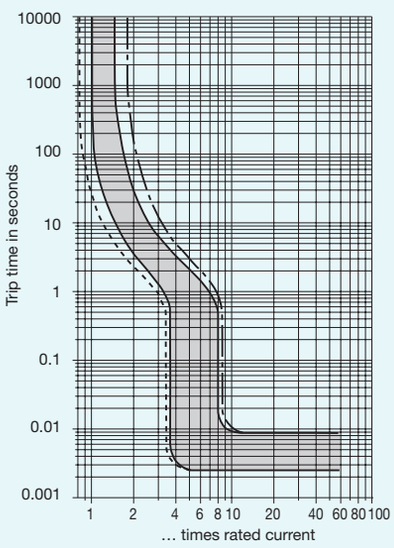

-T1 0.05...6 A AC*

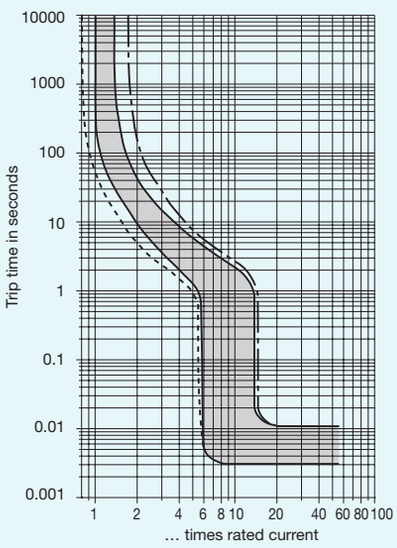

-T1 8...10 A AC*

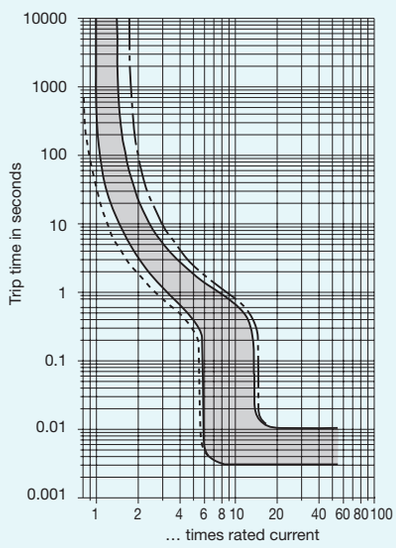

- - - - +60 °C
——— +23 °C
—— - —— -30 °C

2

E-T-A Thermal-Magnetic Circuit Breakers 3600/3900

查询"1110-F112-P1M1-0-5A"供应商

Description

Single pole thermal-magnetic circuit breaker with tease-free, trip-free, snap action mechanism and two button operation (M-type TM CBE to EN 60934). Designed for plug-in mounting with E-T-A sockets 17-P10-Si, 23-P10-Si, 63-P10-Si; or panel mounting using E-T-A clips. Featuring an unprotected shunt tap terminal and optional auxiliary contacts. Type 3900 offers lower internal resistance values and is fitted as standard with auxiliary contacts and an intermediate reset position in which all contacts are isolated.
Complies with CBE standard EN 60934 (IEC 934).

Typical applications

Process control systems, instrumentation, communications systems.

3600 standard type — **3900** low-resistance type

Accessories

23-P10-Si	Lug mounted socket. With push-on terminals.
63-P10-Si	Lug mounted socket. With push-on terminals.
17-P10-Si	EN rail mounted socket.
17-P10-Si-20025	Socket supplied with adapter fitted or asymmetric rail mounting (G-profile).
Y 301 398 02	Withdrawal tool - spring metal clip to aid withdrawal of the circuit breaker from its mounting socket.
X 210 588 01	100-way 1.5mm² cable links with pre-fitted push-on connectors for type 10F-P10 sockets.
X 210 588 02	As above but with 2.5mm² cable links.
Y 300 504 02	One pair of clips to facilitate panel mounting of types 3600 and 3900.

Ordering information

Type No.				
3600	standard version			
3900	low-resistance version			
	Terminal design			
	P10	blade terminals 6.3-0.8		
		Auxiliary contacts (optional with type 3600)		
		Si	with blade terminals 6.3-08,one each NO/NC, (type 3900 with intermediate position as standard)	
		Si60	special auxiliary contact closed in the intermediate and ON position	
		ZR-Si	auxiliary contacts with intermediate position (type 3600)	
		Si3/R	special auxiliary contacts, 2 NC contacts with reset button (not approved)	
			Current ratings	
			0.05...16 A (type 3600)	
			0.05...10 A (type 3900)	

3600 - P10 - Si - 10 A ordering example

The exact part number required can be built up from the table of choices shown above. Ordering references for optional features should be omitted if not required.

Standard current ratings and typical internal resistance values

Current rating (A)	Internal resistance (Ω) 3600	3900	Current rating (A)	Internal resistance (Ω) 3600	3900
0.05	447	211	3	0.19	0.054
0.1	131	48	4	0.090	0.035
0.2	40	12.4	5	0.061	0.025
0.3	19.3	5.7	6	0.041	≤0.02
0.4	10.4	3.1	7	0.034	≤0.02
0.5	7.1	2.0	8	≤0.02	≤0.02
0.6	4.3	1.32	10	≤0.02	≤0.02
0.8	2.5	0.76	12	≤0.02	
1	1.67	0.49	14	≤0.02	
1.5	0.61	0.21	15	≤0.02	
2	0.38	0.101	16	≤0.02	
2.5	0.24	0.078			

Technical data

Voltage rating	AC 250 V, 50/60 Hz; DC 65 V		
Current rating range	3600: 0.05...16 A; 3900: 0.05...10 A		
Auxiliary circuit	1 A, AC 250 V/DC 65 V		
Typical life	5000 operations at $2xI_N$		
Ambient temperature	-30...+60 °C		
Insulation co-ordination (IEC 664 and 664 A)	Rated impulse withstand voltage 2.5 kV	Pollution degree 2	
	reinforced insulation in operating area		
Dielectric strength (IEC 664 and 664A)	Test voltage		
operating area	AC 3000 V		
main/aux. circuit	AC 1500 V		
aux. circuit 4-5/6-7	AC 840 V		
Insulation resistance	>100 MΩ (DC 500 V)		
Interrupting capacity I_{cn}	3600	3900	
	0.05...0.8 A	0.05...0.2 A	self-limiting
	1...2 A	0.3...2 A	200 A
	2.5...16 A	2.5...10 A	400 A
Interrupting capacity (UL 1077)	I_N	U_N	
	0.05...16 A	AC 250 V	1000 A
type 3600	0.05...16 A	DC 80 V	1000 A
Degree of protection (IEC 529/DIN 40050)	operating area IP 40		
	terminal area IP 00		
Vibration	5 g (57-500 Hz), ±0.38 mm (10-57 Hz) to IEC 68-2-6, Test Fc 10 frequency cycles/axis		
Shock	25 g (11 ms) to IEC 68-2-27, Test Ea		
Corrosion	96 hours at 5 % salt mist to IEC 68-2-11, Test Ka		
Humidity	240 hours at 95 % RH to IEC 68-2-3, Test Ca		
Mass	approx. 45 g		

Approvals

Authority	Voltage ratings	Current ratings
3600:		
VDE, Demko, Nemko	AC 250 V, DC 65 V	0.05...16 A
Semko	AC 250 V, DC 65 V	0.1 ...10 A
CSA/UL	AC 250 V, DC 80 V	0.05...16 A
LRoS	AC 250 V, DC 65 V	0.3 ...16 A
3900:		
VDE, Demko, Semko	AC 250 V, DC 28 V	0.05...10 A
Nemko	AC 250 V	0.05...10 A
LRoS	AC 250 V, DC 65 V	0.3 ...10 A

查询"1110-F112-P1M1-0-5A"供应商

Dimensions

-P10-Si

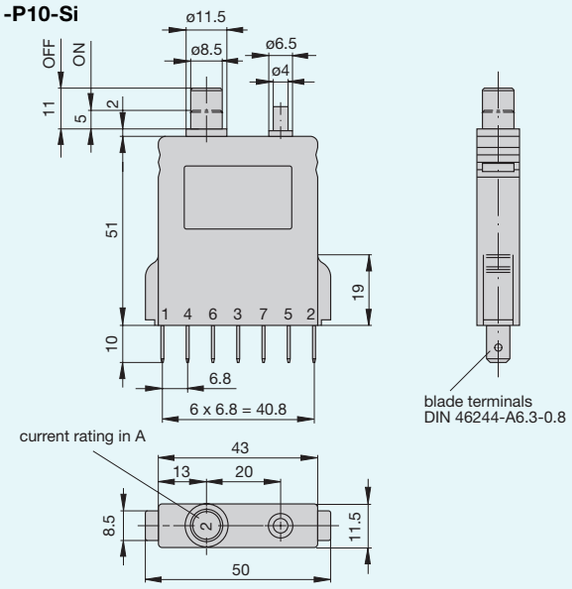

-Si3/R

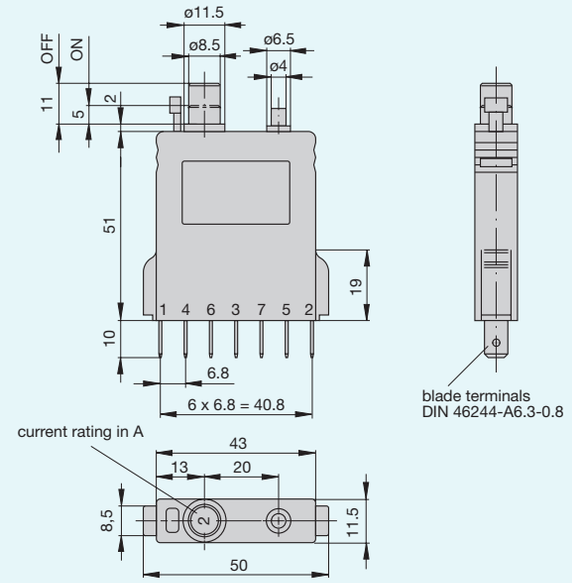

Intermediate position: Holding down reset button and actuating manual release simultaneously.

Internal connection diagrams

with shunt terminal (standard) and auxiliary contacts

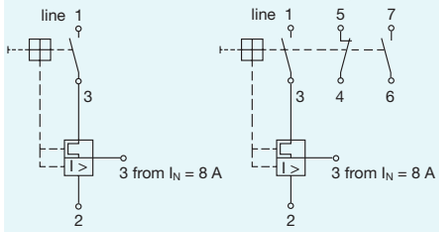

Switching position with auxiliary contacts and reset button (-Si3/R)

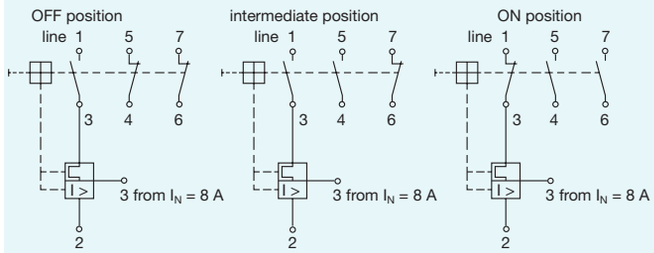

Switching position with special auxiliary contact (-Si60)

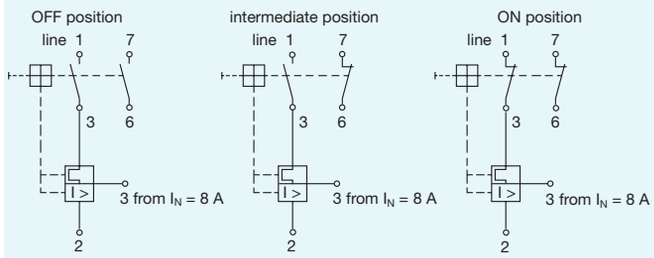

Switching position with intermediate position and auxiliary contacts (-ZR-Si)

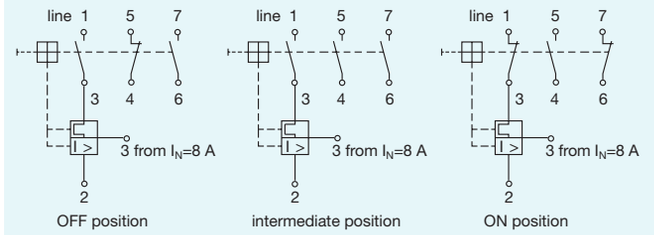

Installation drawing

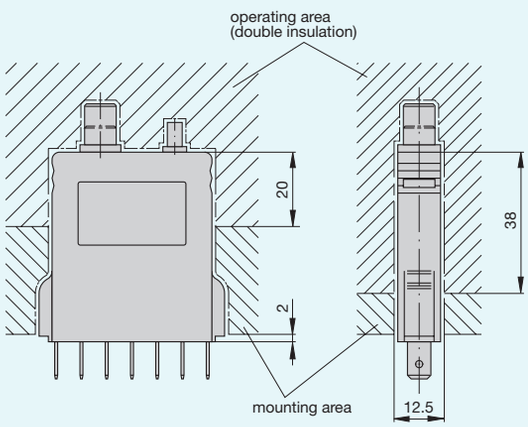

Terminal design -P10-A3

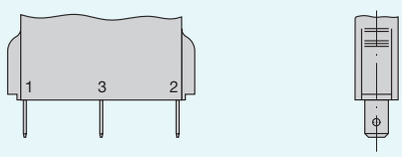

查询"1110-F112-P1M1-0-5A"供应商

Typical time/current characteristics

Time/current characteristics are calibrated at 23°C (see page 8). For operation at other temperatures please apply the factors below to determine the circuit breaker rating required.

Ambient temperature °C	-20	-10	0	+23	+40	+50	+60
Multiplication factor	0.76	0.84	0.92	1	1.08	1.16	1.24

N.B.
* Magnetic tripping currents are increased by 20% on DC supplies.
** Magnetic tripping currents are decreased by 20% on AC supplies.

3600 0.05...7 A AC*

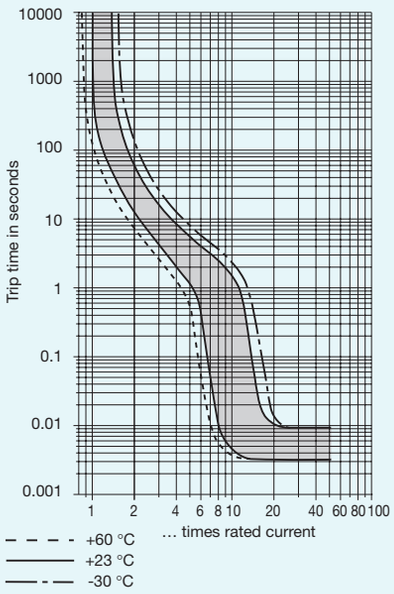

3600 8...16 A AC*

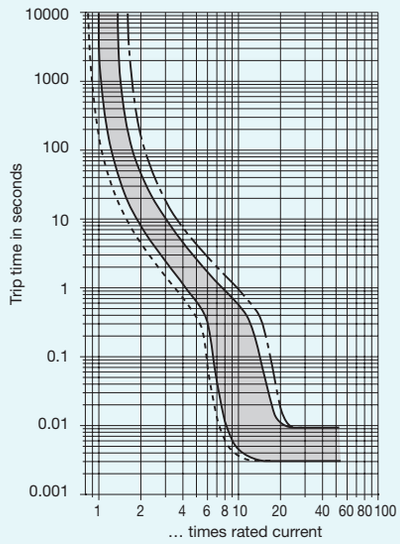

3900 0.05...10 A DC**

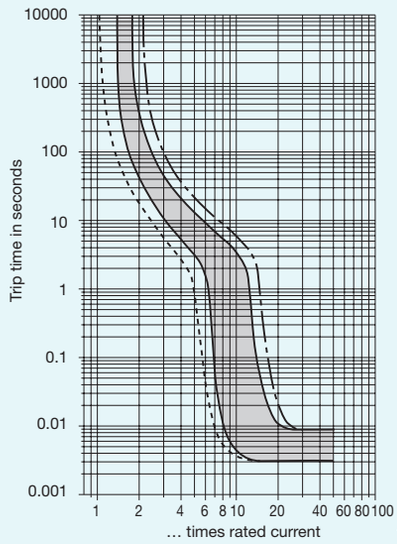

Accessories

19" Rack
accommodating up to 60 E-T-A thermal-magnetic circuit breakers type 3600-P10-Si or 3900-P10-Si.
For technical data see pages 113-114.

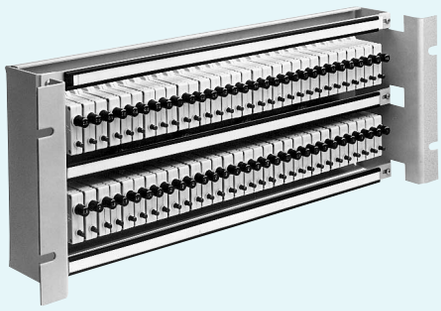

19" Rack 19BGT2 2HE
for 18, 24 or 30 circuits.
For technical data see pages 115 - 116.

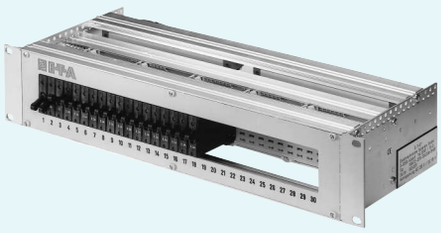

2

查询"1110-F112-P1M1-0-5A"供应商

Accessories

Sockets
17-P10-Si
(continuous load up to 16 A)

17-P10-Si- 20025
mounted with adapter

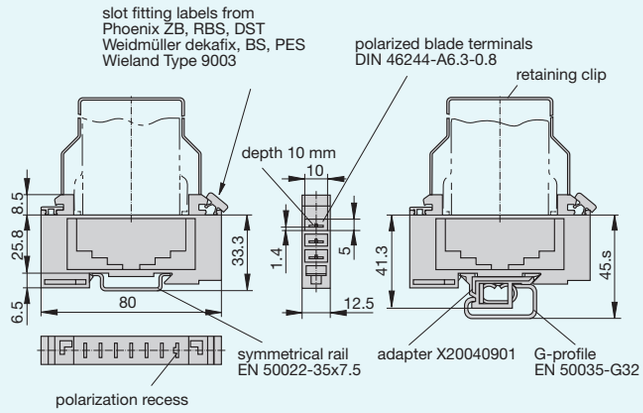

Retaining clip Y 300 581 11
Please enquire for dimension diagram.

Sockets
17-P70-Si

17-P70-Si- 20025
mounted with adapter

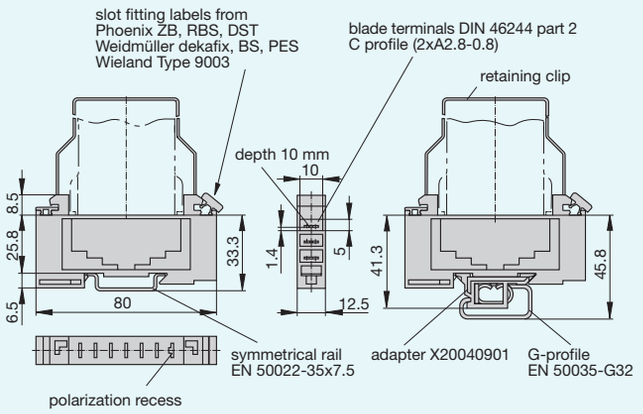

Sockets
23-P10-Si **63-P10-Si**

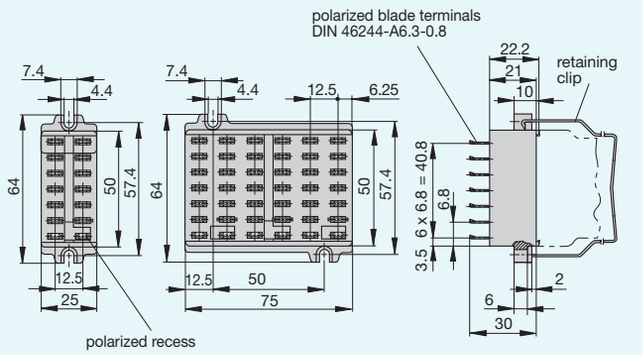

Retaining clip Y 300 581 03
Please enquire for dimension diagram.

Bus bar for socket 17 (for max. 100 A continuous load)
X 211 157 01 with terminal
X 211 157 02 without terminal

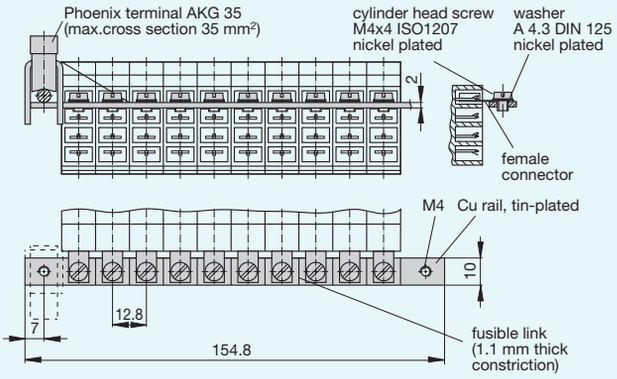

Insulated sleeving for busbar
Y 303 824 01

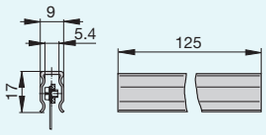

Connector bus links -P10
X 210 588 01 /1,5mm², brown
X 210 588 02 /2,5mm², black
X 210 588 03 /2,5mm², red
X 210 588 04 /2,5mm², blue

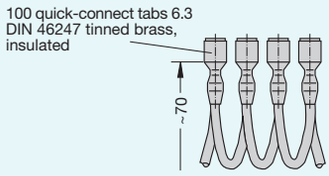

Extraction tool
Y 301 398 02

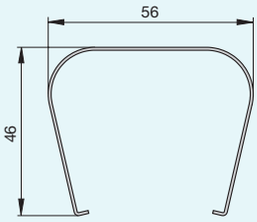

2 mounting clips
Y 300 504 02

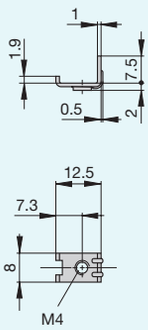

Installation drawing with
mounting clips Y 300 504 02

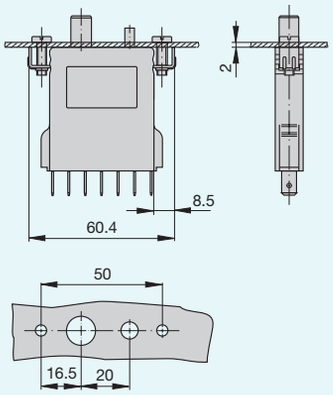

2

查询"1110-F112-P1M1-0-5A"供应商

Single and multi pole magnetic and hydraulic-magnetic circuit breakers (CBEs)

Voltage ratings max. **3 AC 415 V**
AC 250 V, DC 80 V
Current ratings **0.006...100 A**

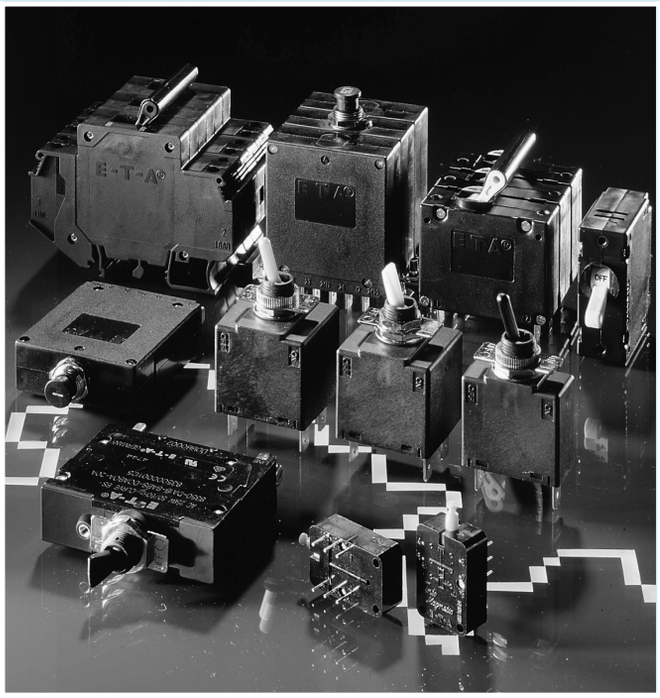

The E-T-A range of magnetic CBEs includes the miniature Printo-magnetic series (808 and 809) with extremely fast operating characteristics for printed circuit board applications, and series 8330, 8340 and 8350 for higher current duties.

Types 808 and 809 cover ratings from as low as 0.006 A up to 5 A with low internal resistance values. Their unique method of magnetic operation not only provides rapid response times, but is also suited to impulse disconnection for control applications.

Type 8340-G provides the option of either single round hole panel mounting or plug-in mounting utilising an E-T-A series 18 base. On/off control is by means of a push/pull button with visual indication of the off/tripped position. Types 8340-F and 8340-T, with industry standard dimensions and toggle actuation, are panel mounted with two fixing bolts (8340-F) or rail mounted with combi-foot (8340-T).

All models within the 8330, 8340 and 8350 range offer a choice of fast acting magnetic operation or hydraulically delayed switching characteristics which may be selected to suit a range of application requirements such as those of the telecommunications and process control industries, where precise and dependable protection of sophisticated systems cannot be compromised. The 8330 is available in single and two pole models, multipole options are also available for types 8340 and 8350. Single, two and three pole models are available with various internal circuit configurations to provide status signal and relay trip functions.

All dimensions without tolerances are for reference only. In the interest of improved design, performance and cost effectiveness the right to make changes in these specifications without notice is reserved.Product markings may not be exactly as the ordering codes.

查询"1110-F112-P1M1-0-5A"供应商

Type No.	808 / 809-...	8330-...	8340-G2...
			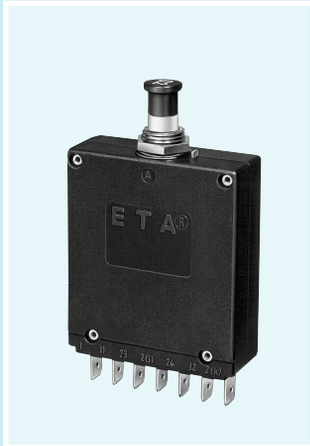
Description	PCB mounting 808: fast-acting type 809: delayed type	Toggle/baton or rocker circuit breaker, flange or threadneck mounting, with auxiliary contact option	Push/pull circuit breaker, threadneck panel mounting, with auxiliary contact option
Max. voltage rating	DC 24 V (please inquire for other voltages)	AC 240 V (50/60 Hz); DC 50 V	3 AC 415 V; AC 240 V (50/60 Hz); DC 80 V
Current ratings	808: 0.01 ...5 A 809: 0.006...3 A	0.1...25 A	0.02...30 A
Aux. contact rating	5 A	-	1 A
Typical life	6,000 operations at 5A for switching circuit and 2.65 or 4.4 I_N ffor excitation circuit	10,000 operations with 1 x I_N	10,000 operations with I_N 1 pole 1,000 operations with I_N 2 and 3pole
Interrupting capacity I_{cn}	100 A 1000 A max. (to UL 1077)	AC: 1000 A DC: 500 A	AC: 1200 A DC: 2000 A
Approvals	CSA, UL	CSA, UL,	VDE, CSA, UL, BV, LRoS
Available options	see pages 169 - 170	see pages 171 - 174	see pages 175 - 178
Dimensions	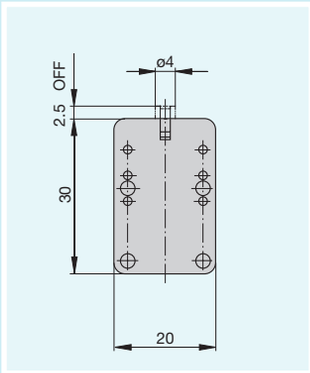	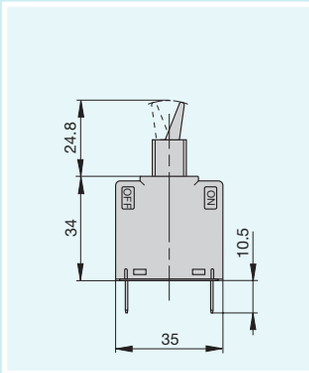	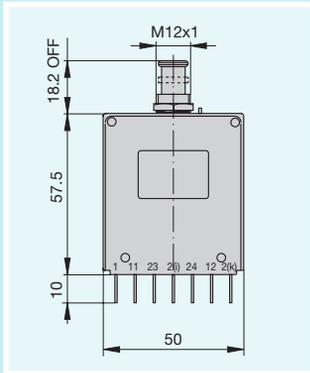
Internal connection diagrams	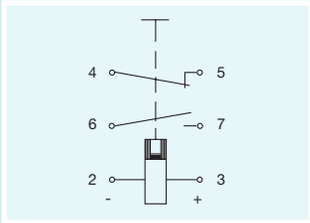	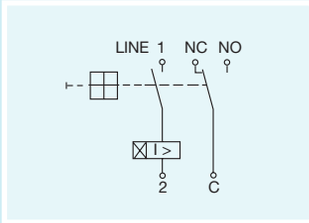	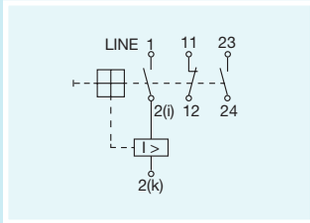

查询"1110-F112-P1M1-0-5A"供应商

8340-F...	X8340-S02 /-S04	8340-T...	8350-...
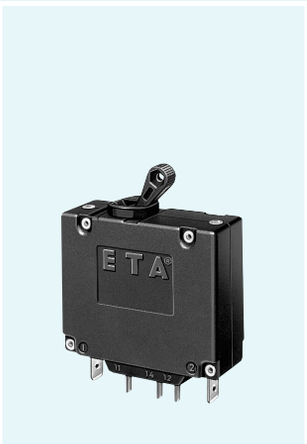	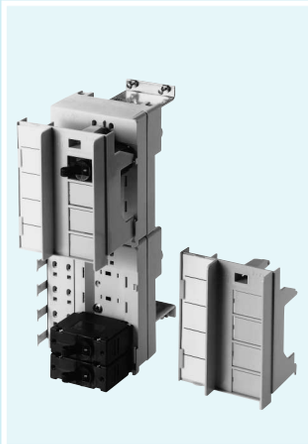		
Toggle circuit breaker, flange mounting, with auxiliary contact option	Modular distribution rail for circuit breaker type 8340-F...	Toggle circuit breaker, rail mounting, with auxiliary contact option	Toggle circuit breaker, flange mounting, with auxiliary contact option
3 AC 415 V; AC 240 V (50/60 Hz); DC 80 V	AC 230 V; DC 65 V	3 AC 415 V; AC 240 V (50/60 Hz); DC 80 V	3 AC 415 V; AC 240 V (50/60 Hz); DC 80 V
0.02...30 A	0.02...80 A	0.02...30 A	0.1... 60 A multi pole 0.1...100 A single pole
6 A	AC: 6 A DC: 1 A	1 A	1 A
10,000 operations with 1 x I_N single and multi pole		10,000 operations with I_N single and multi pole	6,000 operations with I_N
AC: 1200 A DC: 2000 A		AC: 1200 A DC: 2000 A	AC: 5000 A (I_{nc}) DC: 5000 A (I_{nc})
VDE, CSA, UL, BV, LRoS, QPL		VDE, CSA, UL,	VDE, CSA, UL,
see pages 179 - 182	see pages 183 - 186	see pages 187 - 190	see pages 191 - 194
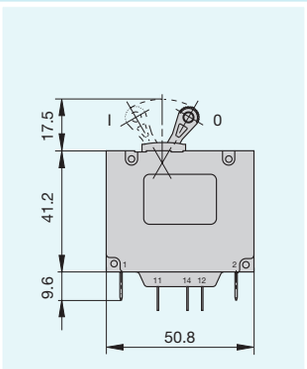	X8340-S02 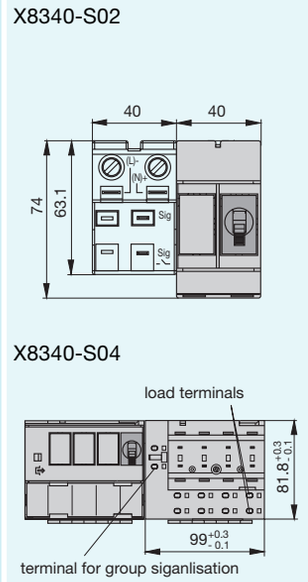	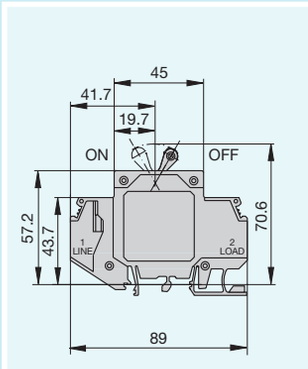	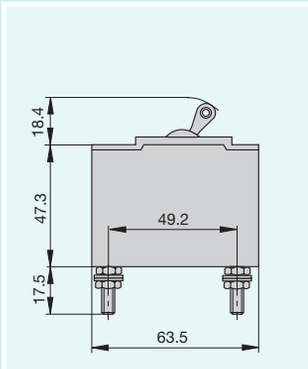
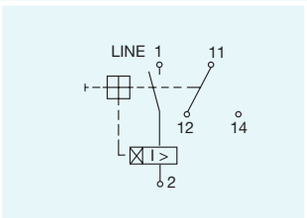		1 pole 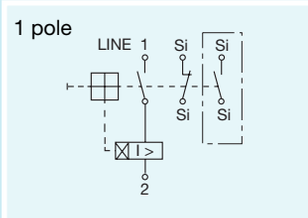	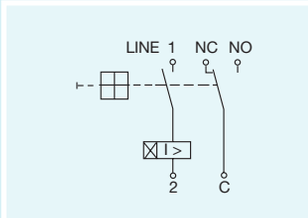

查询"1110-F112-P1M1-0-5A"供应商

Selector Chart

Type No.	Mounting method					Main terminal design							Number of poles		Actuator					Ratings		
	Threadneck	Flange	Socket	Rail	Printed Circuit Board	Blade terminals	Solder terminals	Screw terminals	Stud terminals	Auxiliary contacts	Manual trip facility	Water splash cover	Single pole	Multi pole	Toggle	Push-pull	Rocker	Illumination	Choice of characteristic curves	AC (V)	DC (V)	MAX I_N (A)
808					●		●			●	❍		●			●					24	5
809					●		●			●	❍		●			●					24	3
8330	●	❍				●				❍	●	❍	●	●	●		❍	❍	●	240	50	25
8340-F		●				●		❍		❍	●	❍	●	●	●				●	415	80	30
8340-G	●		●			●		❍		❍	●	❍	●	●		●			●	415	80	30
8340-T				●				●		❍	●		●	●	●				●	415	80	30
8350	●	●		❍		❍		❍	❍	❍	●	❍	●	●	●				●	415	80	100

● = standard
❍ = optional

E-T-A Magnetic Overcurrent Circuit Breakers 808/809-...

查询"1110-F112-P1M1-0-5A"供应商

Description

Single pole miniaturised magnetic circuit breaker with unique high-speed operating mechanism and push/pull on/off manual actuation. Fitted with electrically separate excitation and switching circuits, and one pair of auxiliary contacts which close when the main circuit is open. Also suitable for impulse operation. Designed for printed circuit board mounting. Low temperature sensitivity.

Typical applications

Printed circuit boards and components, safety and control systems.

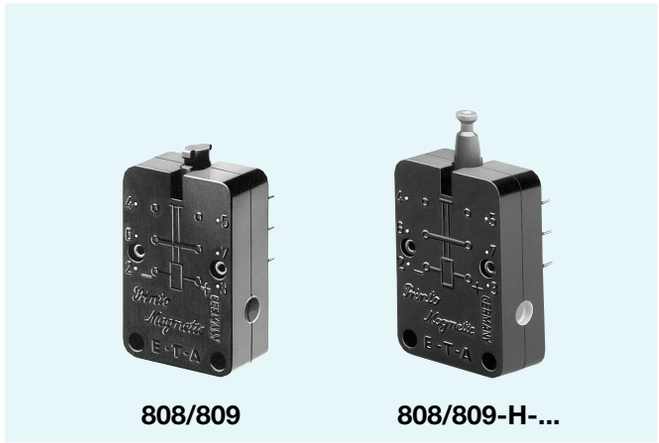

808/809 808/809-H-...

Ordering information

Type No.		
808	fast-acting	
809	delayed	
	Manual release (optional)	
	H	manual release facility
		Current ratings
		0.01 ...5 A type 808
		0.006...3 A type 809

808 - H - 1 A ordering example

The exact part number required can be built up from the table of choices shown above. Ordering references for optional features should be omitted if not required.

Standard current ratings and typical internal resistance values

Current rating (A)	Internal resistance (Ω) 808	809	Current rating (A)	Internal resistance (Ω) 808	809
0.006	-	625	0.7	0.143	0.050
0.01	625	-	0.8	0.096	0.040
0.012	-	170	0.9	0.085	-
0.02	170	77	1	0.073	0.031
0.03	77	29.2	1.2	0.050	≤ 0.02
0.04	47	18.5	1.5	0.031	≤ 0.02
0.05	29.2	10.3	1.8	-	≤ 0.02
0.06	-	5.6	2	≤ 0.02	≤ 0.02
0.08	10.3	-	2.5	≤ 0.02	-
0.1	5.6	3.4	3	≤ 0.02	≤ 0.02
0.2	1.65	0.89	3.25	≤ 0.02	-
0.3	0.89	0.28	4	≤ 0.02	-
0.4	0.39	0.143	4,5	≤ 0.02	-
0.5	0.28	0.096	5	≤ 0.02	-
0.6	0.198	0.073			

Approvals

Authority	Voltage ratings	Current ratings	
UL	AC 120 V, DC 60 V	0.01...5 A	(type 808)
	AC 120 V, DC 60 V	0.006...3 A	(type 809)
CSA	AC 115 V, DC 60 V	0.01...5 A	(type 808)
	AC 115 V, DC 28 V	0.006...3 A	(type 809)

Technical data

Voltage rating	DC 24 V (other voltages to special order)	
Current ratings	Type 808 0.01...5 A	Type 809 0.006...3 A
Max. continuous load excitation circuit (2-3)	2.65 x I_N	4.4 x I_N
Max. continuous load switching circuit 6-7 auxiliary circuit 4-5	5 A	5 A
Typical life	6000 operations at 5 A for switching circuit, at 2.65 or 4.4 x I_N for excitation circuit	
Ambient temperature	-30...+70 °C	
Insulation co-ordination (IEC 664 and 664A)	Rated impulse withstand voltage 1.5 kV	Pollution degree 2
Dielectric strength (IEC 664 and 664A)	Test voltage	
excitation to switching circuit	AC 840 V	
excitation to auxiliary circuit	AC 1680 V	
Insulation resistance	> 100 MΩ (DC 500 V)	
Interrupting capacity (o-o-o)	100 A	
Interrupting capacity (UL 1077)	1000 A AC 120 V 200 A DC 60 V	
Degree of protection (IEC 529/DIN 40050)	operating area IP 30 terminal area IP 00	
Vibration	3 g (57-500 Hz), ±0.23 mm (10-57 Hz), to IEC 68-2-6, test Fc 10 frequency cycles/axis	
Shock	25 g (11 ms) to IEC 68-2-27, test Ea	
Corrosion	96 hours at 5 % salt mist, to IEC 68-2-11, test Ka	
Humidity	240 hours at 95 % RH to IEC 68-2-3, test Ca	
Mass	approx. 10 g	

3

查询"1110-F112-P1M1-0-5A"供应商

Dimensions

808/809

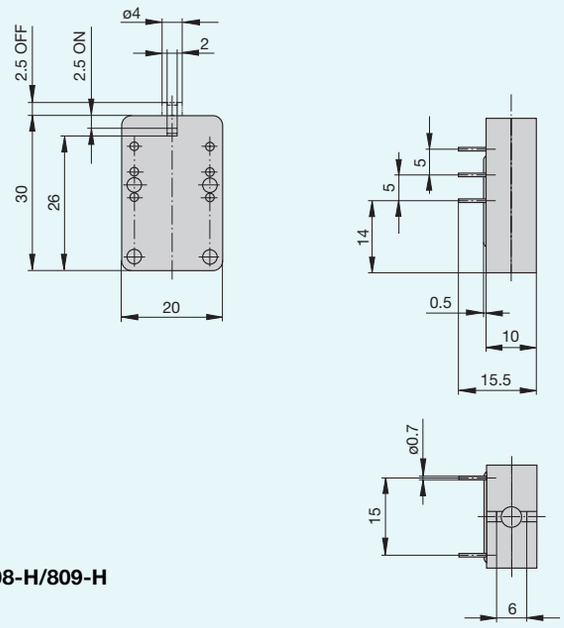

808-H/809-H

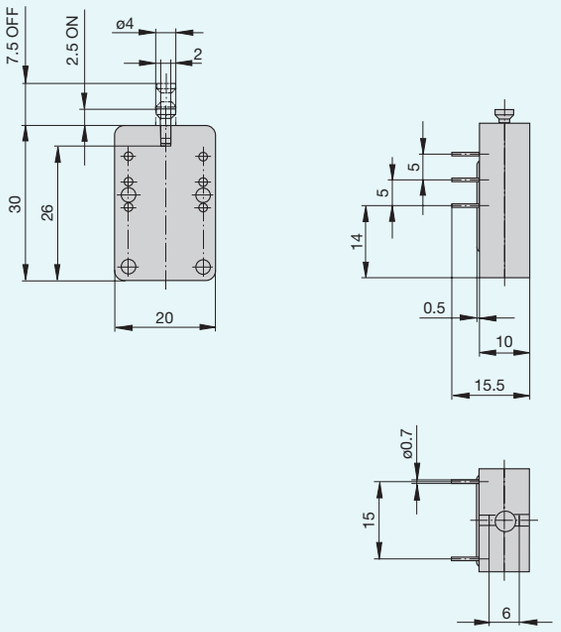

Internal connection diagram

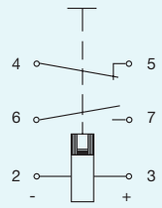

2-3: excitation circuit
6-7: switching circuit
4-5: auxiliary circuit

Typical time/current characteristics at 23 °C

Type 808

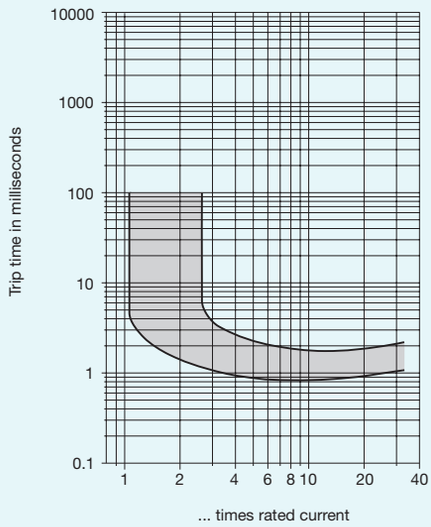

Type 809

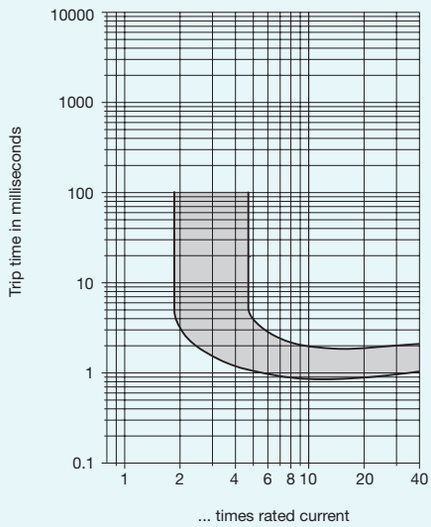

Note:
(Magnetic) tripping currents are decreased by 20% on AC supplies

3

查询"1110-F112-P1M1-0-5A"供应商

Door Locking Relays
Time Delay Relays
Motor Protection Controls
Motor Start Switches

Voltage ratings max. 3 AC 400 V, AC 250 V
DC 28 V
Current ratings 0.1...16 A

Door Locking Relays

E-T-A door locking relays are designed to increase the safety of washing machines, dishwashers, microwave ovens and similar appliances. By ensuring that their doors cannot be opened whilst the machine is operating, users are protected from moving parts, high temperatures, steam, harmful radiation and other hazards.

Suited both to domestic and heavy duty professional equipment, these relays offer a choice of thermal or magnetic sensing element, with versions for current and voltage control.

Energising the relay activates the door locking mechanism, while de-energisation keeps the door locked for a pre-determined time until it is safe to be opened again.

The E-T-A door locking relay series 6510 has been specifically developed to comply with the requirements of IEC 335-2-25 (Safety for Household and Similar appliances). The product is in modular form and offers door closed signalling and locking possibilities for applications such as microwave ovens with pyrolytic cleaning.

The choice of door locking relays available provides flexibility for the designer while ensuring that the legislative demands of different markets can be successfully satisfied.

Time Delay Relays

The E-T-A series 664 is a voltage activated thermal time delay relay suitable for a wide range of applications and process control applications. The excitation circuit and load switching changeover contacts are electrically separate. Delay times can be specified in fixed steps up to sixty seconds.

Motor Protection Controls

Series 2-6500 and 2-6700 over current protection devices with automatic reset actuation are particularly suitable for motor control and similar applications. They are designed to distinguish between temporary overloads, for example motor start conditions, and sustained faults such as locked rotor. A reset delay provides an opportunity for the equipment protected to cool before power is re-applied, and the need for operator intervention is avoided.

Motor Start Switches

E-T-A Motor Start Switches offer a simple and rugged method of disconnecting the auxiliary windings and start capacitors of single phase AC motors. Featuring current sensitive bimetal controlled mechanisms, their switching time is a function of the starting current and its duration.

All dimensions without tolerances are for reference only. In the interest of improved design, performance and cost effectiveness the right to make changes in these specifications without notice is reserved. Product markings may not be exactly as the ordering codes.

查询"1110-F112-P1M1-0-5A"供应商

Dimensions

2-6500-P10 (A3)

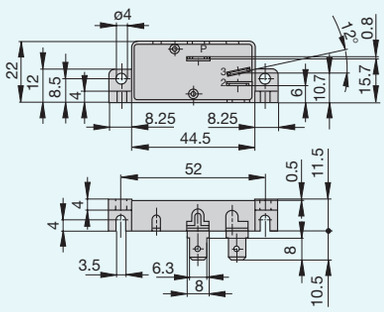

2-6700-P10

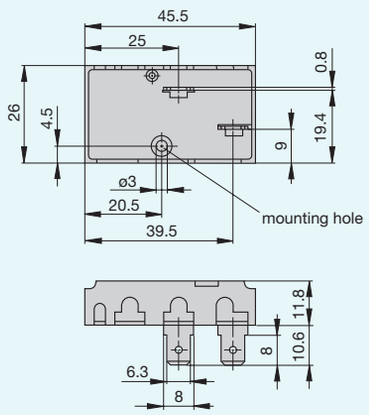

Accessories for type 2-6500

Water splash cover Y 302 151 01
with flange and holes that may be filed out for cable entry

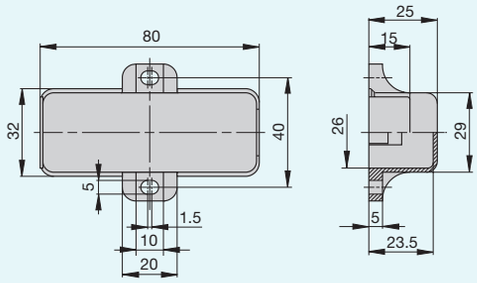

Internal wiring diagram

2-6500-...

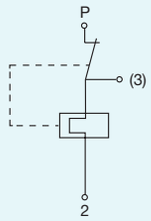

2-6700-...

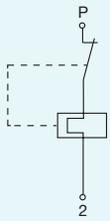

Typical time/current characteristics at 23 °C

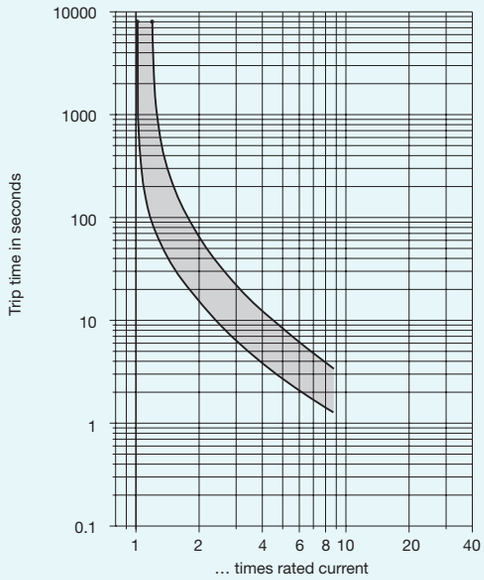

The time/current characteristic curve depends on the ambient temperature prevailing. In order to eliminate nuisance tripping, please multiply the circuit breaker current ratings by the derating factor shown below.

Ambient temperature °C	-10	0	+10	+23	+30	+40	+50	+60
Multiplication factor	0.84	0.92	1	1	1	1.08	1.16	1.24

5

查询"1110-F112-P1M1-0-5A"供应商

Technical description

Under normal operating conditions, the E-T-A SSRPC E-1071-343 allows the connection and disconnection of the load outputs of two channels independent of each other.

Control circuits (I/II)
The control current flows through the LED and the opto coupler immediately a voltage higher than 8.5 V is applied at the input terminals (6 and 7, or 10 and 7). The opto coupler transmits the signal to the load circuit, at the same time switching the load transistor on. This signal is transmitted as a status signal to all monitoring circuits. The input protection diode protects the control voltage from incorrect polarization. Control current limitation is provided by a constant current diode.

Load circuits (I/II)
The load circuit is switched ON or OFF according to the control signal (“0” or “1”), with electronic circuits monitoring the load circuit for faults such as overload or short-circuit. Should one of these faults occur, the monitoring circuitry will immediately react, causing the load transistor to disconnect and the circuit breaker to trip. Transistor disconnection occurs according to the storage time characteristics. The storage time increases noise immunity avoiding disconnection of non-harmful peaks such as those caused by inrush currents from lamp load connection. Storage time is not a constant quantity but is inversely proportional to the overcurrent factor.

After expiration of the storage time (see diagram) the load circuit transistor will become non-conductive. After approx. 5 s the isolator will switch off so as to disconnect the two load circuits. The common auxiliary contact closes signalling the fault. After removal of the fault, the SSRPC can be reactivated by pushing the isolator button.

Status outputs
Status indication is provided by 4 LEDs (2 x RED, 2 x GREEN).

RED LED
ON indication (I/II)
The red LED indicates when the control voltage is higher than 8.5 V, with control current flowing.

GREEN LED
Current flow indication (I/II)
The green LED indicates when the load current is above 0.1 A.

Faults such as too high a resistance, wire break, poor contact, or overload/short-circuit, are available when only the red LED indicates.

The SSRPC E-1071-343 includes three current measuring terminals (4 mm dia.) on the front. These terminals provide for load current measurement in terms of voltage drop at the 0.1 Ω shunt in the load circuit (I/II).

Storage time characteristic curve

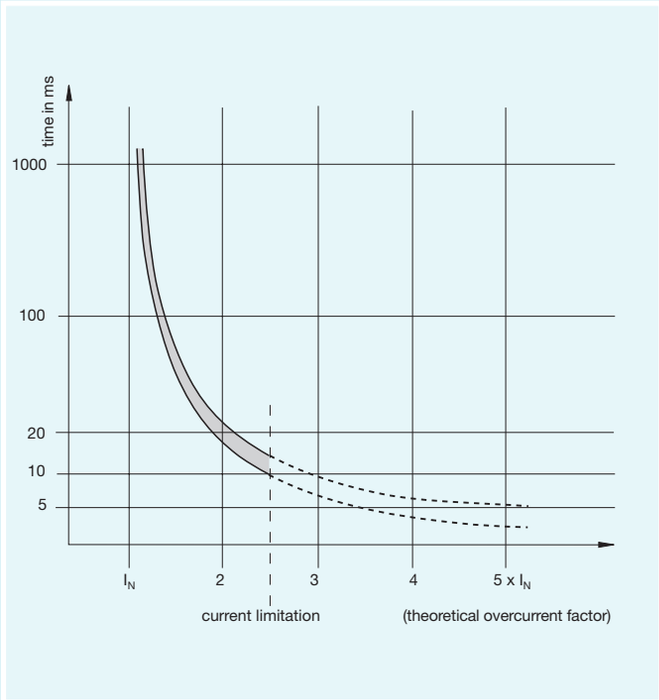

Operating modes

Operating status	Fault-free operation		Short-circuit on the load	Wire break	
Control input	“0”	“1”	“1”	“0”	“1”
RED LED - Control current	0	1	1	0	1
GREEN LED - Load current monitoring	0	1	0	0	0
Auxiliary contact	open	open	closed	open	open
Remarks	load OFF	load ON	both load circuits disconnected		

1 - LED indicates
0 - LED does not indicate

6

E-T-A Solid State Remote Power Controller E-1071-803

查询"1110-F112-P1M1-0-5A"供应商

Description

The E-T-A Solid State Remote Power Controllers E-1071-803 are electronic control modules suitable for inductive loads (DC 24 V) such as solenoids, magnetic brakes etc.
They are used
- for safe and quick switching of loads
- for monitoring the electrical condition of the loads
- for compensating for different cable lengths

The load connected to the relay should be operated with a voltage higher than its rated voltage (DC 24 V) because the load current is controlled electronically (pulse-controlled characteristics). This is to ensure that in industrial plants with different cable lengths (supply cables, load cables) an increased inrush current can be applied to each load. During hold duty the load current is reduced to a smaller value (between 25 % and 75 % of the current rating), thus reducing the operating temperature and extending the life of the loads.

E-1071-803

Typical applications

Circuits with inductive load such as

- solenoids
- magnetic brakes etc.

where fast switching of inductive loads is required.

Features

- **Designed for inductive loads (DC 24 V)**
- Individual adjustment to various load currents (I_N = 0.25 A; 0.4 A; 1 A; 2 A; 3 A)
- Significant reduction of power loss in the load by pulse-controlled characteristics
- Short-circuit proof; short-circuit limitation and physical disconnection from supply after approx. 5 s
- Inrush current monitoring
- Overload protection (current control)
- Fast disconnection (do not connect a free wheeling diode to the load as the the free wheeling current is controlled electronically!)
- Physical isolation:
  - opto coupler in the control circuit
  - relay contacts in the load circuit
  - fault indication by means of auxiliary contact (N/O)
- Reverse polarity protection in the control and load circuits
- Control current indication by YELLOW LED
- Wire break indication by RED LED (load circuit)
- Minimum current indication by GREEN LED

Ordering information

Type No.			
E-1071	SSRPC		
	Operating mode		
	803	pulse controlled	
		Voltage rating of load	
		DC 24 V	
			Current rating
			0.25 A
			0.4 A
			1 A
			2 A
			3 A

E-1071 - 803 - DC 24 V - 1 A ordering example

Technical data (T_A = 25 °C, U_B = DC 36 V)

Operating voltage U_B	DC 36 V (28...60 V) (function maintained up to DC 18 V)
Current rating I_N	0.25 A/0.4 A/1 A/2 A/3 A
Current consumption (U_B = DC 36 V, U_S = "0")	typically 30 mA
Residual ripple for all voltages	max. 5 % (3 phase bridge)
Reverse polarity protection U_B (terminal 1 - terminal 2)	double pole relay
Physical isolation	2-pole - by manual circuit breaker release - approx. 5 s after short-circuit disconnection
Load circuit	
Load output	NPN transistor, minus switching, pulse-controlled (approx. 180 Hz)
Load rating	DC 24 V/0.25 A (3... 6 W) DC 24 V/0.4 A (6...10 W) DC 24 V/1 A (15...30 W) DC 24 V/2 A (30...50 W) DC 24 V/3 A (50...75 W)
Switch-on current I_E (with short-circuit limitation)	U_B/R_{total} for approx. 400 ms
Minimum current I_{min} ($\hat{=}$ hold current I_H)	adjustable between 25 and 75 % I_N (e.g. 0.5...1.5 A with the 2 A version)
Short-circuit limitation	approx. 2 x I_N
Short-circuit current $I_{K\,(rms)}$ (depending on U_B and I_N)	typically 10 mA
Wire break indication	in the ON and OFF condition (RED LED)
Current measuring terminals	2 x 2 mm dia. (shunt 0.1 Ω ± 1 %)
Leakage current (U_S = "0")	typically 1 mA
Free-wheeling circuitry	integral electronic control with quick disconnection
Control circuit	
Control	opto coupler in control input
Control voltage U_S	"0" = 0 ... 5 V "1" = 8.5...35 V
Control current I_S	typically 5 mA
Switching frequency f_{max}	1 Hz
Control signal (U_S = "1")	YELLOW LED lights (I_S flowing)
Protection	reverse polarity protection (diode)
Status outputs	
Fault indication	auxiliary contact (N/O) - max. DC 30 V/3 A - physically isolated - closed when the circuit breaker has tripped
General data	
Ambient temperature	0...+60 °C (without condensation)
Terminals	screw terminals 2x2.5 mm² to DIN 46288
Housing	clamping plate: polycarbonate GV, blue; cover: polycarbonate, black
Mounting	on top-hat rail to DIN 50022-35
Self-extinguishing properties	to UL 94: V = 0; VDE 0304: grade 1
Degree of protection (IEC 529/DIN 40050)	IP 20 housing, terminals
Mounting dimensions	45 x 74 x 128 mm
Mass	approx. 240 g

6

查询"1110-F112-P1M1-0-5A"供应商

Technical description

Operating voltage U_B
The max. admissible operating voltage of the SSRPC is approx. DC 60 V. The min. operating voltage is a function of the overall ohmic resistance in the load circuit. The switch-on current is reduced by
- the voltage drop on the load cable
- the load resistance increasing with the operating temperature of the load.

The function as shown below is no longer ensured when the minimum operating voltage (DC 28 V) is under limits. The output will then be continuously conductive, and the set minimum current may no longer be reached.

Switch-on current I_E
To reach the max. inrush current the output transistor connects the operating voltage to the inductive load for approx. 400 ms. After this period the load current is set back to hold current (= minimum current).

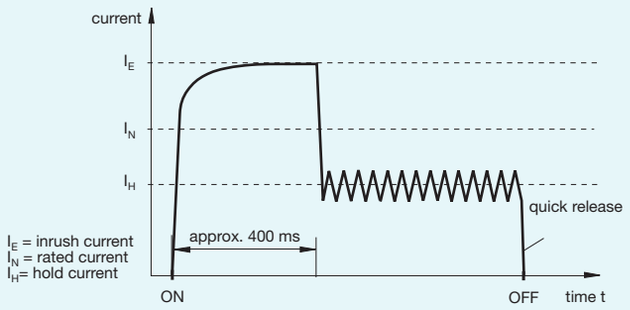

Setting of hold current I_H (= minimum current)
The hold current of the load is set between 25 % and 75 % I_N by the 270 ° potentiometer on the front. This hold current should be measured by means of a voltmeter connected to the 2 mm current measuring terminals (0.1 Ω shunt).

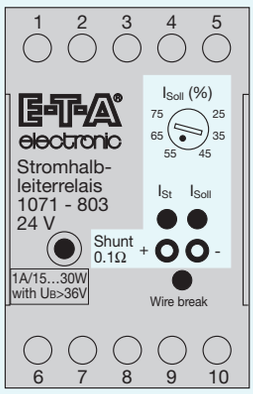

Technical description (cont'd)

- Operating voltage (terminals 1 and 2):
  reverse polarity protected by means of a relay.
  The relay will only pick up and apply voltage to the device if the operating voltage is correctly polarised. This relay will then remain permanently energized, without being influenced by the control input.
- Control circuit (terminals 6 and 7):
  reverse polarity protected by means of a diode.
- The load output (terminals 3-4) or the inductive load must not be fitted with a free-wheeling diode as the free-wheeling current is controlled electronically. This control also causes a very short fall time of the inductive load.

The solenoid connector may be fitted with a visual indication means (LED).

Operating modes

Operating status	Fault-free operation		Short-circuit on the load	Wire break		U_B too low/ incorrect setting
control input	"0"	"1"	"1"	"0"	"1"	"1"
YELLOW LED - control current	1	1	0	1	1	1
GREEN LED - minimum current	0	1	0	0	0	0
RED LED - wire break	0	0	0	1	1	0
Auxiliary contact	open	open	closed	open	open	open
Remark	load OFF	load ON	physical isolation after approx. 5 s	no load connected wire break		current cannot be adjusted

1 - LED lights
0 = LED does not light

查询"1110-F112-P1M1-0-5A"供应商

Dimensions

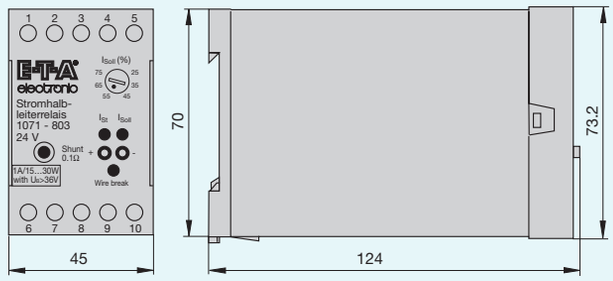

Terminal selection

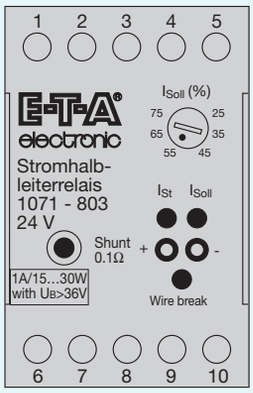

Basic circuit diagram

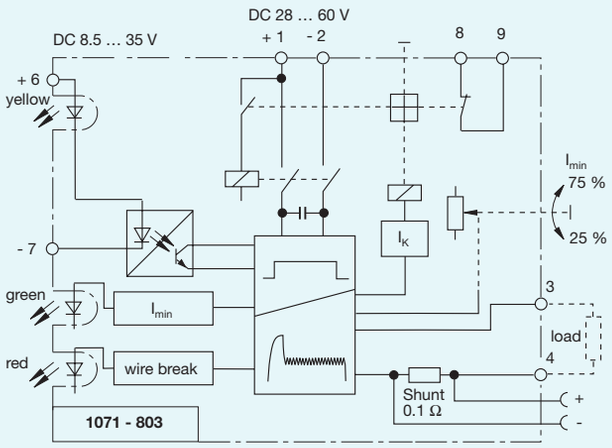

Terminal:

1 operating voltage $+U_B$: max. DC 60 V
2 operating voltage $-U_B$
3 load (+)
4 load (-)
5 not used
6 control voltage $+U_S$: max. 35 V
7 control voltage $-U_S$
8 auxiliary contact
9 auxiliary contact
10 not used

6

查询"1110-F112-P1M1-0-5A"供应商

E-T-A Flow Meters and Flow Monitors

The E-T-A range of electronic flow metering and monitoring systems has been designed to measure and supervise the flow rate of gases and liquids in pipelines.
Models operating on the calorimetric principle avoid the need for moving parts in the flow stream and are therefore especially suitable for use with liquids of high viscosity, or containing particles or contaminants. Alternatively high precision turbine sensors are available for applications which demand accurate volumetric measurement.
Calorimetric models comprise a monitoring sensor head, installed in the pipeline, and an electronic controller which may be either integrated with the monitoring head or remotely sited, according to type. These systems provide an output to signal deviation of flow from a pre-set level. Temperature monitoring and continuous analogue output are additional functions which can be selected on some models.
The E-T-A flow meter/monitor programme offers a choice of specification, performance, size and cost to meet a wide variety of different uses and budget requirements. All models are maintenance-free ensuring fit-and-forget reliability, and benefit from E-T-A's investment in process sensor research and development spanning over 25 years.

Typical applications

Applications for E-T-A flow monitors and meters extend across the entire industrial spectrum including:

- Air conditioning systems, radiators and filtration equipment
- Gas and exhaust monitoring systems in heating and power plants, blast furnaces, and gas supply systems
- Welding equipment
- Food processing, brewing and dairy product applications
- Water and waste treatment plant
- Paper manufacturing
- Petrochemical processing
- Pump monitoring and protection
- Control of lubricating, hydraulic and cooling systems
- Agricultural equipment
- Marine and transportation requirements

Condensed Selector Chart

For liquids:	SW 118, SW 119, (B)SFW 120, SFW 120-E, SW 201, SFW 209, FM 1
For air/gas:	SW 112, SW 118, SW 119, SLW 120-E, SW 201, FM 1
For hazardous areas:	FM1-Ex
For granules (powders):	SW 201-F, SFW 209, SW 118, SW 119

All dimensions without tolerances are for reference only. In the interest of improved design, performance and cost effectiveness the right to make changes in these specifications without notice is reserved. Product markings may not be exactly as the ordering codes.

E-T-A Electronic Flow Meters

查询"1110-F112-P1M1-0-5A"供应商

Type No.	FM 1-...	Monitoring heads for FM 1-...
		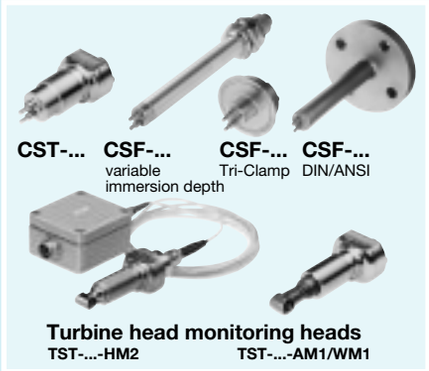
Media		gases, oil, liquids, powder
Features	menu control linear analogue outputs optional temperature monitoring medium temperature up to +125°C (up to +250°C with turbine head) relay outputs LED/bargraph display	linear analogue outputs optional temperature monitoring medium temperature up to +130°C
Flow rate range	0... 3 m/s for water 0... 5 m/s for oil 0...20 m/s for air/gases	
Temperature range of medium/ monitoring head		-40°C...+130°C (calorimetric head) -30°C...+140°C or 0°C...+250°C (turbine head)
Temperature range of electronic control unit	+10 °C...+50 °C	
Outputs	analogue outputs: 0/4-20 mA or 0/2-10 V or 0/1-5 V relay or transistor outputs	
Input voltage	DC 24 V (19...32 V) AC 24 V ±10%	
Type and size of monitoring head		CSF: flange-mounted heads to DIN 2500 or DIN/ISO 2825 CST, TST: thread-mounted heads G 1/2A, G 3/4A, 1/2"NPT or 3/4"NPT
Materials of monitoring head		sensor and fitting: 1.4571/AISI 316 Ti
Cable to electronic control unit		2 m standard, 100 m max.
Data sheet	see CPI cat. pages 13 - 15	see CPI cat. pages 16 - 18
Dimensions	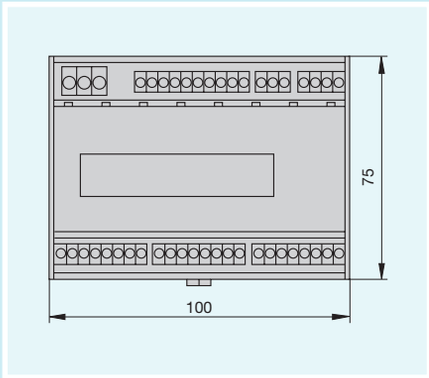	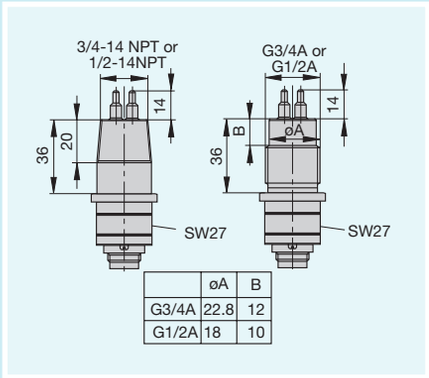

查询"1110-F112-P1M1-0-5A"供应商

Type No.	SW 112-...	SW 118-...	SW119-...
Media	air	gases, liquids, powder	gases, liquids, powder
Features	1 switch point (MIN) relay signal output LED status indication	1 switch point (MIN or MAX) non-linear trend outputs relay output LED status indication optional temperature monitoring medium selector switch	1 switch point (MIN or MAX) non-linear trend outputs relay output LED status indication temperature monitoring medium selector switch
Flow rate range	0.5 m/s...20 m/s	liquids: 0.01 m/s..2 m/s gases: 0.5 m/s...50 m/s	liquids: 0.01 m/s..2 m/s gases: 0.5 m/s...50 m/s
Temperature range of medium/monitoring head	-20 °C...+60 °C	-25°C...+70 °C	-25°C...+100 °C
Temperature range of electronic control unit	-20 °C...+50 °C	-25 °C...+50 °C	-25 °C...+50 °C
Outputs	1 relay max. load: 700 mA	1 relay (change over contact) AC 250 V, DC 30 V: 5 A overvoltage category II trend output 4-8 V	1 relay (change over contact) AC 250 V, DC 30 V: 5 A overvoltage category II trend output 4-8 V
Input voltage	AC 24 V + 10%/-15% DC 19...32 V	AC 230 V / 115 V / 24 V +10 %/-15 % DC 24 V ±10 %	AC 230 V / 115 V / 24 V +10 %/-15 % DC 24 V ±10 %
Type and size of monitoring head	monitoring head dia. 18 mm, integral with electronic control unit	monitoring heads G1/2A, G3/4A, 1/2"NPT or 3/4"NPT integral with the electronic control unit	monitoring heads G1/2A, G3/4A, 1/2"NPT or 3/4"NPT
Material of monitoring head	PVC, aluminium, polyamide	sensor and fitting: 1.4571/AISI 316 Ti,	sensor and fitting: 1.4571/AISI 316 Ti,
Cable length	with 2 m cable (standard), max. cable length 25 m, at relay output	without cable (standard), max. cable length 50 m, at relay output	with 2 m cable (standard), max. cable length 100 m, between monitoring head and electronic control unit
Available options	see CPI cat. pages 21 - 22	see CPI cat. pages 23 - 26	see CPI cat. pages 23 - 26
Dimensions	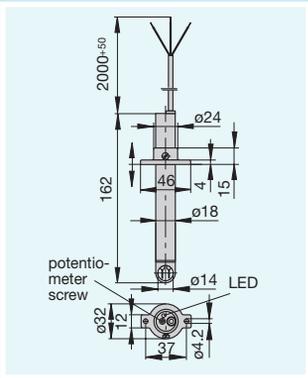	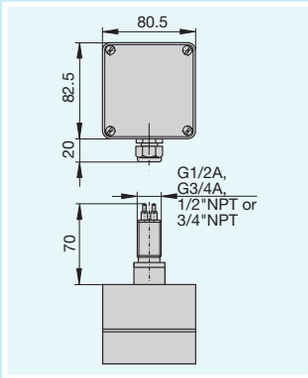	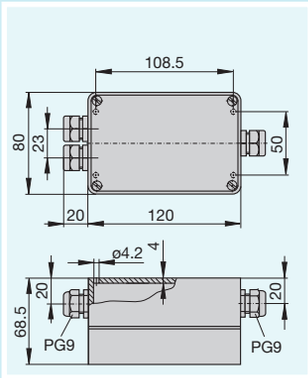

查询"1110-F112-P1M1-0-5A"供应商

(B)SFW 120-...	SFW/SLW 120-E-...	SW 201..	SWT 201..
liquids	gases, liquids	gases (air), liquids, powder	gases (air), liquids, powder
1 switch point (MIN or MAX) transistor output LED status indication SFW 120: industrial applications (MIN) BSFW 120: marine applications (MAX)	1 switch point (MIN or MAX) relay output LED status indication	1 switch point (MIN) non-linear analogue output relay outputs status indication by 2 LEDs medium selector switch	1 switch point (MIN) non-linear analogue output relay outputs status indication by 3 LEDs temperature monitoring medium selector switch
0.01 m/s...2 m/s	liquids: 0.1 l/min...10 l/min gases: 2.5 l/min...250 l/min	air: 0.5 m/s...100 m/s liquids: 0.01 m/s...5 m/s	air: 0.5 m/s...100 m/s liquids: 0.01 m/s...5 m/s
-10 °C...+60 °C	-10 °C...+60 °C	-40 °C...+100 °C	-40 °C...+100 °C
-10 °C...+60 °C	-10 °C...+60 °C	-10 °C...+45 °C	-10 °C...+45 °C
PNP transistor max. load: 0.3 A (DC12V) max. load: 50 mA (DC 24 V)	1 relay (change over contact) AC/DC 28 V: 1 A	a) 2 relays (change over contacts), AC 250 V, DC 28 V: 1 A overvoltage category II b) analogue output non-linear 0/4...20 mA	a) 3 relays (change over contacts) AC 250 V, DC 28 V: 1A overvoltage category II b) analogue output: non-linear 0/4...20 mA
DC 12 V (10.7...16 V) DC 24 V (12...26.4 V)	DC 24 V (18...32 V) AC 24 V +10%/-15%	AC 230/115/24 V +10%/-15% DC 24 V ± 10%	AC 230/115/24 V +10%/-15% DC 24 V ± 10%
G 3/4 A or 3/4"NPT sealing: Viton, teflon coated	Ermeto sizes EF6 to EF12, 1/4" NPT, G 3/8A sensor and electronic control unit comprised in one housing	monitoring heads G1/2A, G3/4A, 1/2"NPT or 3/4"NPT	monitoring heads G1/2A, G3/4A, 1/2"NPT or 3/4"NPT
sensor and fitting material: SFW 120: 1.4571/AISI 316 Ti; BSFW 120: AP1D	sensor material: AP1D sensor: PVDF; sealing rings: Viton®	sensor and fitting: 1.4571/AISI 316Ti,	sensor and fitting: 1.4571/AISI 316Ti,
without cable (standard) max. cable length 25m, at transistor output	without cable (standard) max. cable length 25m, at relay output	2 m cable (standard), max. cable length 100 m, between monitoring head and electronic control unit	2 m cable (standard), max. cable length 100 m, between monitoring head and electronic control unit
see CPI cat. pages 27 - 28	see CPI cat. pages 29 - 30	see CPI cat. pages 31 - 34	see CPI cat. pages 31 - 34
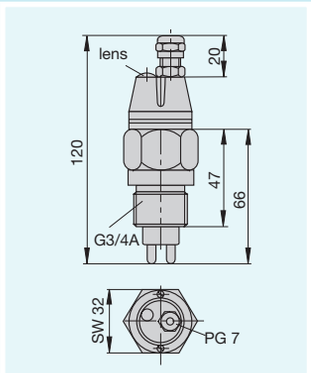	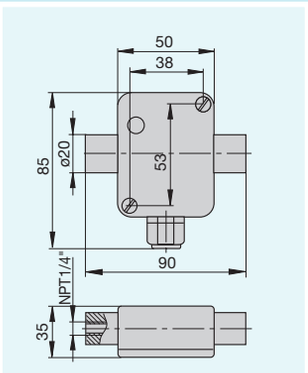	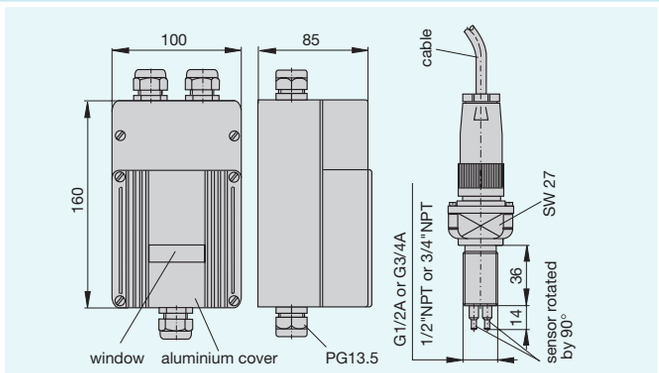	

查询"1110-F112-P1M1-0-5A"供应商

Type No.	SFW 209
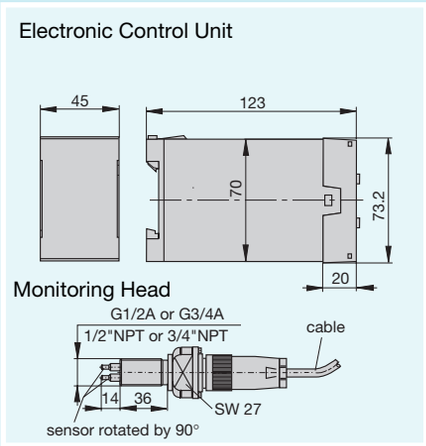
Media	liquids, gases, powder
Features	1 switch point (MIN or MAX) relay output status indication by 2 LEDs
Flow rate range	0.01 m/s...2 m/s with water 0.5 m/s...50 m/s with gases
Temperature range of medium/monitoring head	-25 °C...+100 °C
Temperature range of electronic control unit	-10 °C...+60 °C
Outputs	1 relay (change over contact) AC 250 V, DC 28 V: 2 A
Input voltage	AC 230 V / 115 V / 24 V +10%/-15% DC 24 V ± 10%
Type and size of monitoring head	monitoring heads G1/2A, G3/4A, 1/2"NPT or 3/4"NPT
Material of monitoring head	sensor and fitting: 1.4571/AISI 316Ti,
Cable length	2 m cable (standard),max. cable length 50 m
Available options	see CPI cat. pages 35 - 36
Dimensions