## KESTREL/POK/BE/RE

查询"127720"供应商

## Polyester enclosures

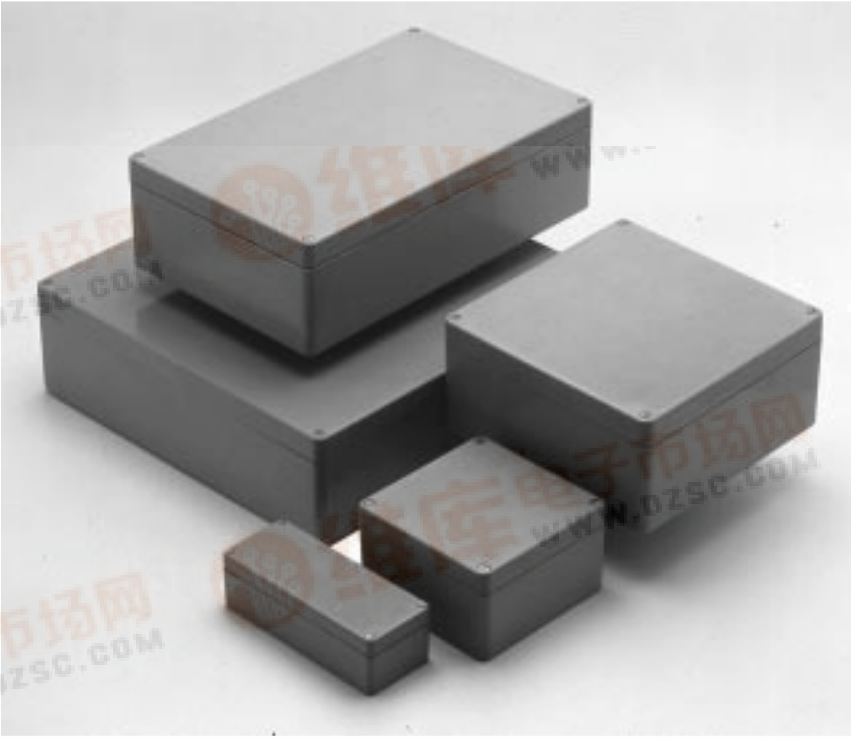

The Kestrel range of glass fibre reinforced polyester enclosures are a high quality solution for intermediate electrical connections. The enclosures are suitable for applications where corrosion resistance, impact resistance and a high protection class are important.

The enclosures are available in

| | |
|---|---|
| Grey: | POK |
| Blue: | BE |
| Red: | RE |

| Technical Data | | |
|---|---|---|
| Material | Glass fibre reinforced polyester (GRP) | |
| Finish | POK | Natural Grey (similar to RAL7001) |
| | BE | Blue |
| | RE | Red |
| Gasket | Silicon Rubber | |
| Lid Fixing | Sizes 1,2, 3, 31,32 | 4 stainless steel +/- head screws M4 |
| | Sizes 4 to 12 | 4 stainless steel +/- head screws M6 |
| Enclosure Mounting | Sizes 1, 2, 3, 31, 32 | 4 holes, M4 |
| | Sizes 4 to 12 | 4 holes, M6 |
| Protection Class | IP68 to EN 60529 | |
| Impact Resistance | All versions | 7 Nm |
| Temperature Range | All versions | -40°C to +130°C |
| Flammability | All versions | UL94 V-O |
| Toxicity | All versions | Halogen and cadmium free |

| Special versions | | |
|---|---|---|
| Finish | POK | Special paint colours available |
| Electromagnetic compatibility | Shielded for EMC applications | |

| Approvals |
|---|
| GL |

POK also available for EX applications



找PDF 维库一下 pdf.dzsc.com

## Kestrel Range Ordering Information

查询"127720"供应商

| Ordering information | | | | | | | | | | |
|---|---|---|---|---|---|---|---|---|---|---|
| Height mm | 75 | | 75 | | 75 | | 75 | | 75 | |
| Width mm | 80 | | 110 | | 160 | | 190 | | 230 | |
| Depth mm | 61 | | 61 | | 61 | | 61 | | 61 | |
| Kg | 0.35 | | 0.4 | | 0.497 | | 0.535 | | 0.695 | |
| | Type | Cat. No. | Type | Cat. No. | Type | Cat. No. | Type | Cat. No. | Type | Cat. No. |
| | POK1 | **127720 •** | POK2 | **127730 •** | POK3 | **127740 •** | POK31 | **156540 •** | POK32 | **951051 •** |
| | BE1 | 951073 | BE2 | **951074 •** | BE3 | 951075 | BE31 | 951076 | BE32 | 951077 |
| | RE1 | 951460 | RE2 | **951461 •** | RE3 | 951462 | RE31 | 951463 | RE32 | 951464 |

| | | | | | | | | | | |
|---|---|---|---|---|---|---|---|---|---|---|
| Height mm | 120 | | 120 | | 160 | | 160 | | 160 | |
| Width mm | 125 | | 220 | | 160 | | 260 | | 360 | |
| Depth mm | 90 | | 95 | | 95 | | 95 | | 95 | |
| Kg | 0.850 | | 1.06 | | 1.13 | | 1.71 | | 2.15 | |
| | Type | Cat. No. | Type | Cat. No. | Type | Cat. No. | Type | Cat. No. | Type | Cat. No. |
| | POK4 | **127750 •** | POK5 | **127760 •** | POK51 | **156541 •** | POK6 | **127770 •** | POK7 | **127780 •** |
| | BE4 | **951078 •** | BE5 | 951079 | BE51 | **951080 •** | BE6 | **951081 •** | BE7 | 951082 |
| | RE4 | **951465 •** | RE5 | 951466 | RE51 | **951467 •** | RE6 | **951468 •** | RE7 | 951469 |

| | | | | | | | | | | |
|---|---|---|---|---|---|---|---|---|---|---|
| Height mm | 160 | | 250 | | 250 | | 250 | | 405 | |
| Width mm | 560 | | 255 | | 400 | | 600 | | 400 | |
| Depth mm | 95 | | 125 | | 125 | | 125 | | 125 | |
| Kg | 3.713 | | 2.65 | | 3.375 | | 5.83 | | 5.58 | |
| | Type | Cat. No. | Type | Cat. No. | Type | Cat. No. | Type | Cat. No. | Type | Cat. No. |
| | POK71 | **951052 •** | POK8 | **156542 •** | POK9 | **156543 •** | POK91 | **951047 •** | POK10 | **156544 •** |
| | BE71 | 951083 | BE8 | **951084 •** | BE9 | **951085 •** | BE91 | 951086 | BE10 | 951087 |
| | RE71 | 951470 | RE8 | **951471 •** | RE9 | **951472 •** | RE91 | 951473 | RE10 | 951474 |

| | | | | |
|---|---|---|---|---|
| Height mm | 250 | | 250 | |
| Width mm | 255 | | 400 | |
| Depth mm | 165 | | 165 | |
| Kg | 3.92 | | 5.056 | |
| | Type | Cat. No. | Type | Cat. No. |
| | POK11 | **951053 •** | POK12 | **951054 •** |
| | BE11 | 951088 | BE12 | 951089 |
| | RE11 | 951475 | RE12 | 951476 |

## Accessories for Kestrel Range

| **Mounting Plates** | **Manufactured in zinc coated mild steel** | | | | |
|---|---|---|---|---|---|
| Type | Cat. No. | Type | Cat. No. | Type | Cat. No. |
| Kestrel Size 1 MP | 951057 | Kestrel Size 5 MP | 951060 | Kestrel Size 9 MP | 951065 |
| Kestrel Size 2 MP | 951058 | Kestrel Size 51 MP | 951061 | Kestrel Size 91 MP | 951066 |
| Kestrel Size 3 MP | 951069 | Kestrel Size 6 MP | 951062 | Kestrel Size 10 MP | 951067 |
| Kestrel Size 31 MP | 951069 | Kestrel Size 7 MP | 951063 | Kestrel Size 11 MP | 951064 |
| Kestrel Size 32 MP | 951070 | Kestrel Size 71 MP | 951071 | Kestrel Size 12 MP | 951065 |
| Kestrel Size 4 MP | 951059 | Kestrel Size 8 MP | 951064 | | |

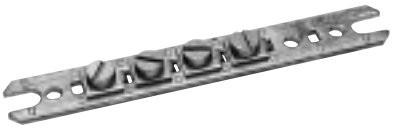

| **Earth Bars** | | | | | |
|---|---|---|---|---|---|
| To fit type | Horizontal Bar | Vertical Bar | To fit type | Horizontal Bar | Vertical Bar |
| Kestrel Size 4 | 951120 | 951116 | Kestrel Size 8 | 951126 | 951118 |
| Kestrel Size 5 | 951121 | 951116 | Kestrel Size 9 | 951127 | 951118 |
| Kestrel Size 51 | 951123 | 985117 | Kestrel Size 91 | 951128 | 951118 |
| Kestrel Size 6 | 951123 | 951117 | Kestrel Size 10 | 951127 | 951119 |
| Kestrel Size 7 | 951124 | 951117 | Kestrel Size 11 | 951126 | 951118 |
| Kestrel Size 71 | 951125 | 951117 | Kestrel Size 12 | 951127 | 951118 |

查询"127720"供应商

**POK 10**

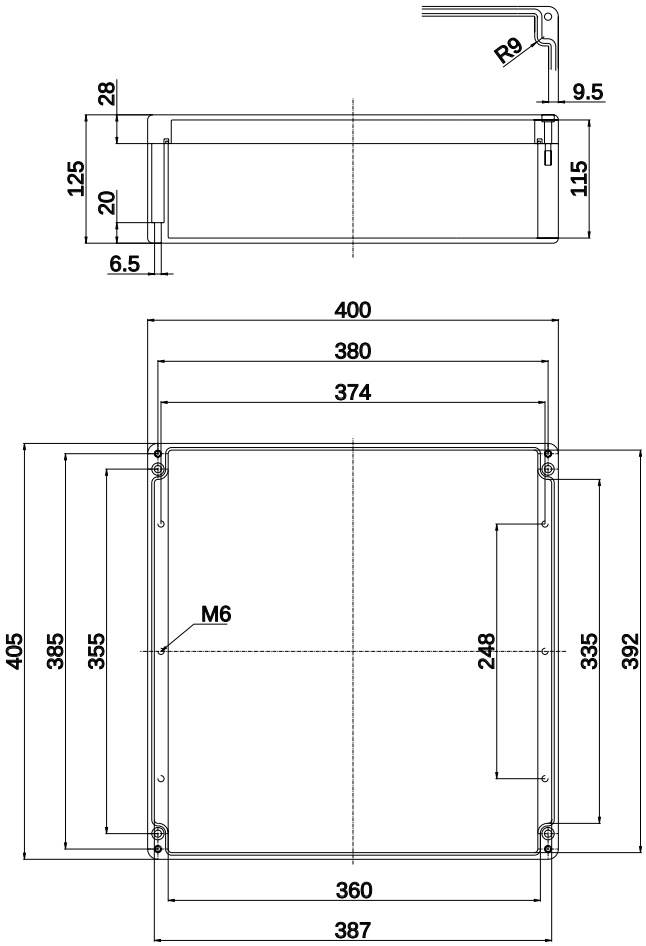


**POK 11**

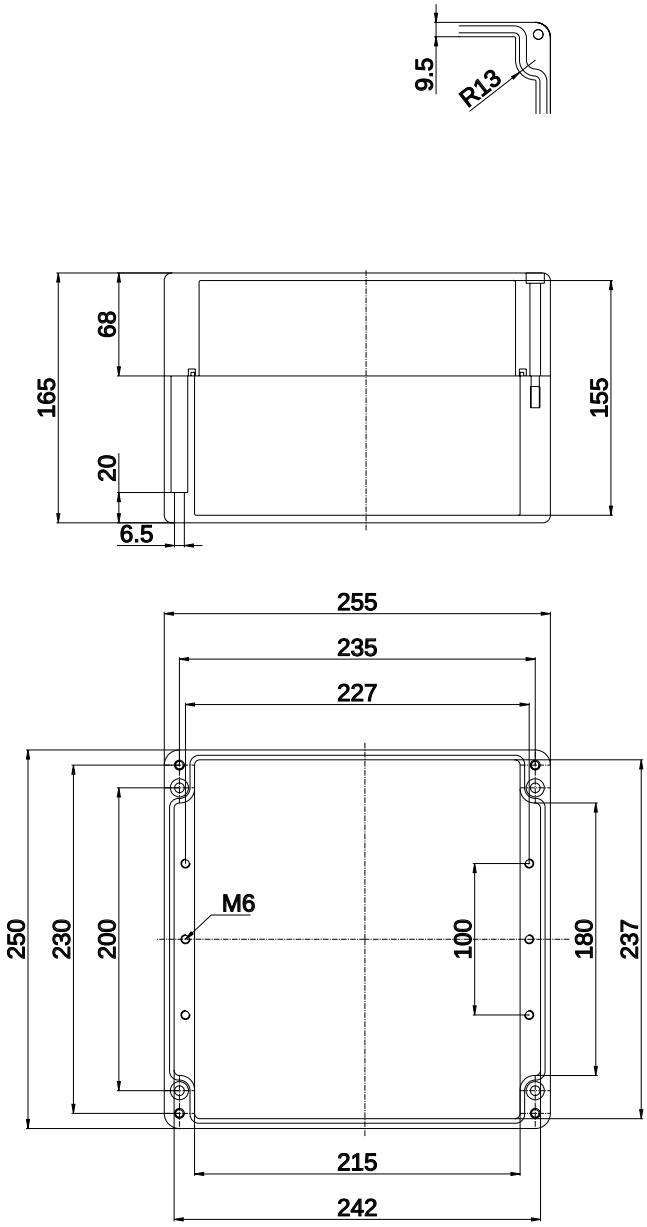

## Kestrel Accessories (contd.)

查询"127720"供应商

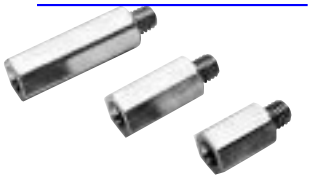

| Stand off pillars | | |
|---|---|---|
| Type | Length (mm) | Cat. No. |
| SP15 (set of 4) | 15 | **389610 •** |
| SP20 (set of 4) | 20 | **389620 •** |
| SP30 (set of 4) | 30 | **389630 •** |

| Mounting feet | | |
|---|---|---|
| Type | To fit enclosure size | Cat. No. |
| MF5 | 1, 2, 3, 31, 32 | 951090 |
| MF6 | All other sizes | 951091 |

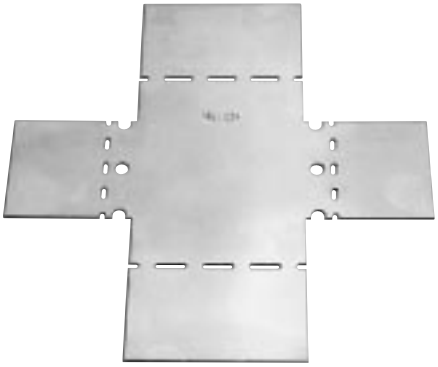

| Hinge | | |
|---|---|---|
| Type | Cat. No. | |
| POK/BE/RE hinge | 158036 | |
| | **Number of hinges per side** | |
| Enclosure Size | Sides A & B | Sides C & D |
| 1 | 1 | 1 |
| 2 | 1 | 1 |
| 3 | 1 | 1 |
| 31 | 1 | 1 |
| 32 | 2 | 1 |
| 4 | 2 | 1 |
| 5 | 2 | 1 |
| 51 | 2 | 2 |
| 6 | 2 | 2 |
| 7 | 2 | 2 |
| 71 | 2 | 2 |
| 8 | 2 | 2 |
| 9 | 2 | 1 |
| 91 | 2 | 1 |
| 10 | 1 | 1 |
| 11 | 2 | 1 |
| 12 | 2 | 2 |

| Brass earth continuity plates | |
|---|---|
| Suitable to fit enclosure size | Cat. No. |
| 1 | 951099 |
| 2 | 951100 |
| 3 | 951101 |
| 31 | 951102 |
| 32 | 951103 |
| 4 | 951104 |
| 5 | 951105 |
| 51 | 951106 |
| 6 | 951107 |
| 7 | 951108 |
| 71 | 951109 |
| 8 | 951110 |
| 9 | 951111 |
| 91 | 951112 |
| 10 | 951113 |
| 11 | 951110 |
| 12 | 951111 |

## Kestrel Glanding/Entry details

查询"127720"供应商

| | Enclosure Size | 1 | | 2 | | 3 | | 31 | | 32 | | 4 | |
|---|---|---|---|---|---|---|---|---|---|---|---|---|---|
| | Sides | A/B | C/D | A/B | C/D | A/B | C/D | A/B | C/D | A/B | C/D | A/B | C/D |
| M16 | | 2 | 1 | 4 | 1 | 6 | 1 | 8 | 1 | 4 | 1 | 8 | 6 |
| M20 | | 1 | - | 2 | - | 3 | - | 4 | - | 2 | - | 2 | 1 |
| M25 | | - | - | - | - | - | - | - | - | - | - | 2 | 1 |
| M32 | | - | - | - | - | - | - | - | - | - | - | 1 | 1 |
| M40 | | - | - | - | - | - | - | - | - | - | - | - | - |
| M50 | | - | - | - | - | - | - | - | - | - | - | - | - |
| | | | | | | | | | | | | | |
| Pg7 | | 4 | 2 | 6 | 1 | 12 | 1 | 16 | 1 | 14 | 1 | 12 | 6 |
| Pg9 | | 2 | 1 | 4 | 1 | 8 | 1 | 8 | 1 | 6 | 1 | 8 | 6 |
| Pg11 | | 2 | 1 | 3 | 1 | 5 | 1 | 6 | 1 | 6 | 1 | 6 | 4 |
| Pg13.5 | | - | 2 | 3 | 1 | 4 | 1 | 6 | 1 | 6 | 1 | 5 | 3 |
| Pg16 | | 1 | - | 2 | 1 | 4 | 1 | 5 | 1 | 6 | 1 | 3 | 2 |
| Pg21 | | - | - | 1 | - | 3 | - | 3 | - | 5 | - | 2 | 1 |
| Pg29 | | - | - | - | - | - | - | - | - | - | - | 2 | 1 |

| | Enclosure Size | 5 | | 51 | | 6 | | 7 | | 71 | | 8 | |
|---|---|---|---|---|---|---|---|---|---|---|---|---|---|
| | Sides | A/B | C/D | A/B | C/D | A/B | C/D | A/B | C/D | A/B | C/D | A/B | C/D |
| M16 | | 18 | 6 | 12 | 8 | 22 | 8 | 30 | 8 | 43 | 8 | 44 | 32 |
| M20 | | 6 | 1 | 3 | 2 | 7 | 2 | 9 | 2 | 18 | 2 | 14 | 10 |
| M25 | | 4 | 1 | 2 | 2 | 5 | 2 | 6 | 2 | 13 | 2 | 10 | 8 |
| M32 | | 3 | 1 | 2 | 1 | 4 | 1 | 5 | 1 | 9 | 1 | 4 | 3 |
| M40 | | - | - | - | - | - | - | - | - | - | - | 3 | 2 |
| M50 | | - | - | - | - | - | - | - | - | - | - | 2 | 2 |
| | | | | | | | | | | | | | |
| Pg7 | | 27 | 6 | 18 | 8 | 33 | 8 | 42 | 8 | 87 | 8 | 44 | 25 |
| Pg9 | | 14 | 6 | 14 | 8 | 18 | 8 | 29 | 8 | 52 | 8 | 34 | 25 |
| Pg11 | | 14 | 4 | 9 | 6 | 14 | 6 | 24 | 6 | 40 | 6 | 30 | 21 |
| Pg13.5 | | 10 | 3 | 8 | 6 | 14 | 6 | 20 | 4 | 38 | 4 | 21 | 18 |
| Pg16 | | 6 | 2 | 6 | 4 | 10 | 3 | 14 | 3 | 34 | 3 | 18 | 14 |
| Pg21 | | 4 | 1 | 3 | 2 | 5 | 2 | 9 | 2 | 18 | 2 | 10 | 8 |
| Pg29 | | 3 | 1 | 2 | 1 | 4 | 2 | 6 | 2 | 11 | 2 | 5 | 4 |
| Pg36 | | - | - | 2 | 1 | 3 | 1 | 5 | 1 | 8 | 1 | 4 | 3 |
| Pg42 | | - | - | 1 | 1 | 3 | 1 | 4 | 1 | 8 | 1 | 3 | 1 |

| | Enclosure Size | 9 | | 91 | | 10 | | 11 | | 12 | |
|---|---|---|---|---|---|---|---|---|---|---|---|
| | Sides | A/B | C/D | A/B | C/D | A/B | C/D | A/B | C/D | A/B | C/D |
| M16 | | 64 | 32 | 88 | 28 | 64 | 58 | 51 | 45 | 99 | 45 |
| M20 | | 22 | 10 | 28 | 8 | 22 | 18 | 22 | 16 | 42 | 16 |
| M25 | | 16 | 8 | 24 | 6 | 16 | 16 | 15 | 11 | 24 | 11 |
| M32 | | 7 | 3 | 12 | 3 | 7 | 6 | 8 | 6 | 21 | 6 |
| M40 | | 5 | 2 | 8 | 2 | 5 | 5 | 6 | 4 | 10 | 4 |
| M50 | | 4 | 2 | 6 | 2 | 4 | 4 | 3 | 2 | 6 | 2 |
| | | | | | | | | | | | |
| Pg7 | | 80 | 25 | 120 | 25 | 80 | 42 | 113 | 84 | 212 | 84 |
| Pg9 | | 50 | 25 | 96 | 25 | 50 | 42 | 67 | 45 | 123 | 45 |
| Pg11 | | 38 | 18 | 78 | 18 | 38 | 34 | 48 | 35 | 93 | 35 |
| Pg13.5 | | 36 | 18 | 54 | 18 | 36 | 32 | 40 | 30 | 70 | 30 |
| Pg16 | | 30 | 14 | 42 | 14 | 30 | 24 | 33 | 24 | 63 | 24 |
| Pg21 | | 17 | 8 | 24 | 8 | 17 | 16 | 18 | 16 | 38 | 16 |
| Pg29 | | 8 | 4 | 16 | 4 | 8 | 8 | 11 | 8 | 20 | 8 |
| Pg36 | | 6 | 3 | 8 | 3 | 6 | 5 | 7 | 6 | 12 | 6 |
| Pg42 | | 6 | 1 | 8 | 1 | 5 | 2 | 6 | 3 | 10 | 3 |

## Enclosure side identification

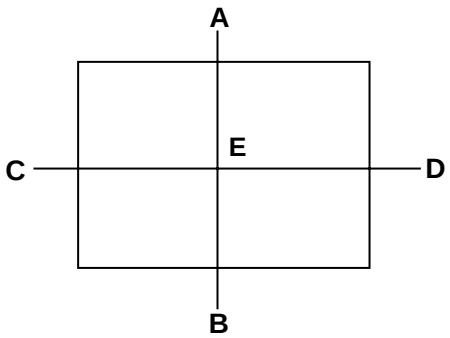


A: Top
B: Bottom
C: Left
D: Right
E: Base

**Dimensional Details**

查询"127720"供应商

**POK 1**

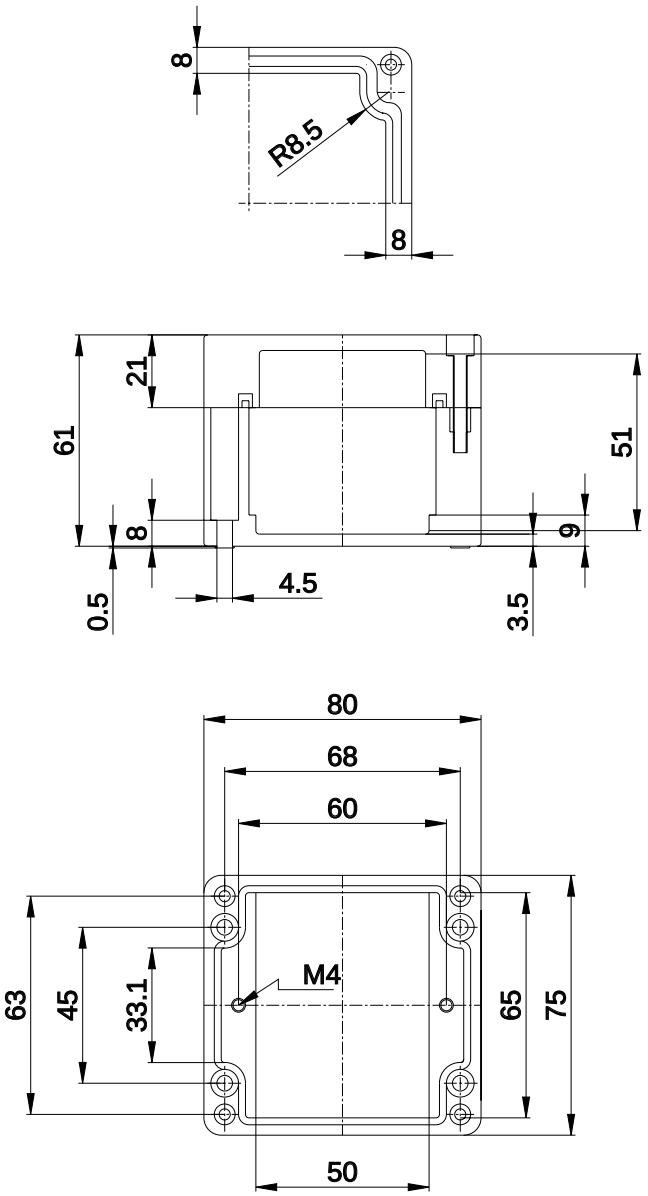


**POK 2**

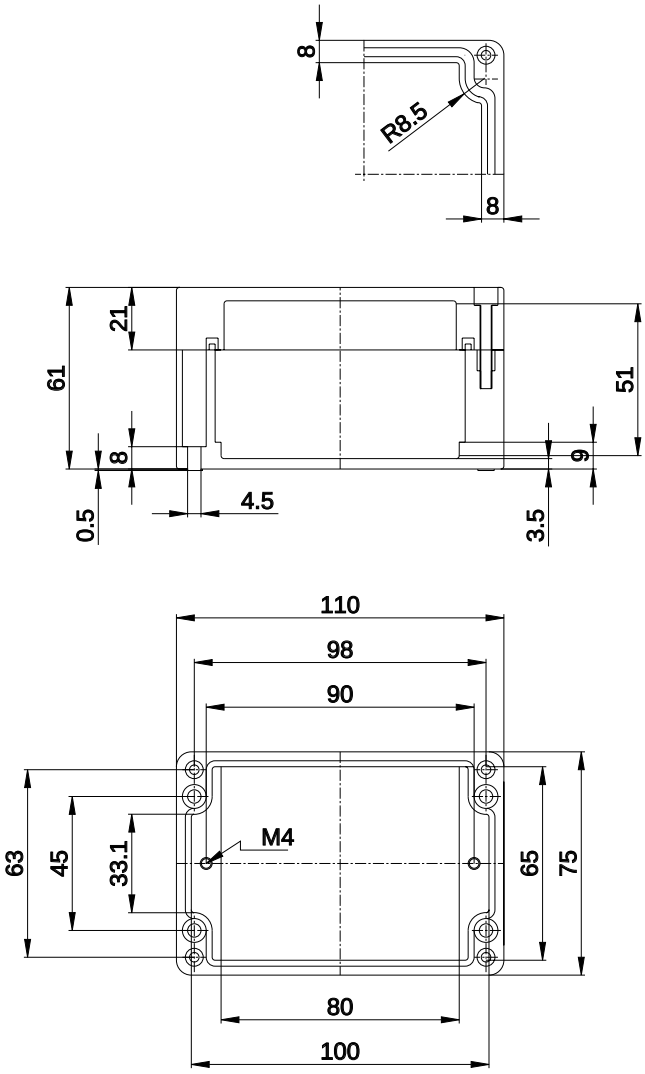

查询"127720"供应商

**POK 3**

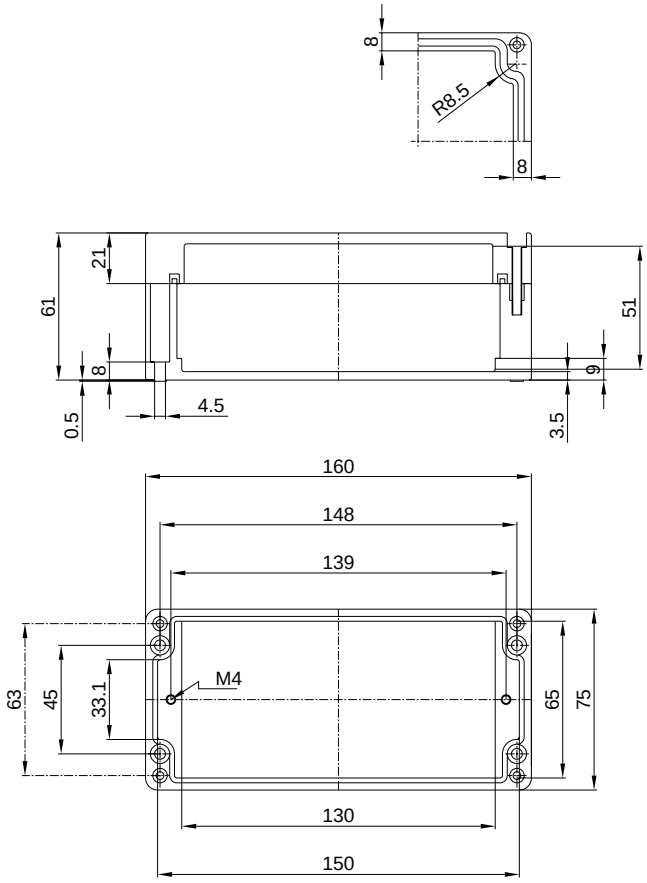


**POK 31**

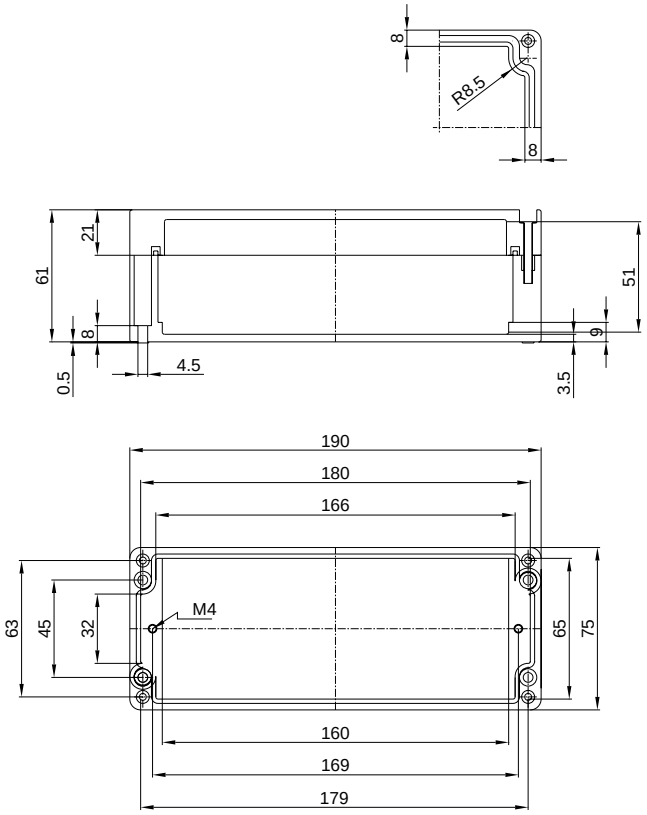

查询"127720"供应商

**POK 32**

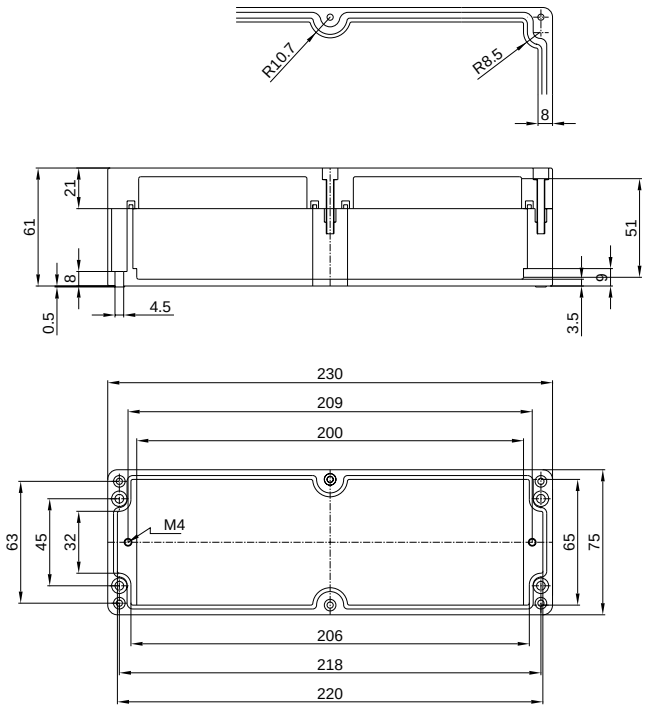


**POK 4**

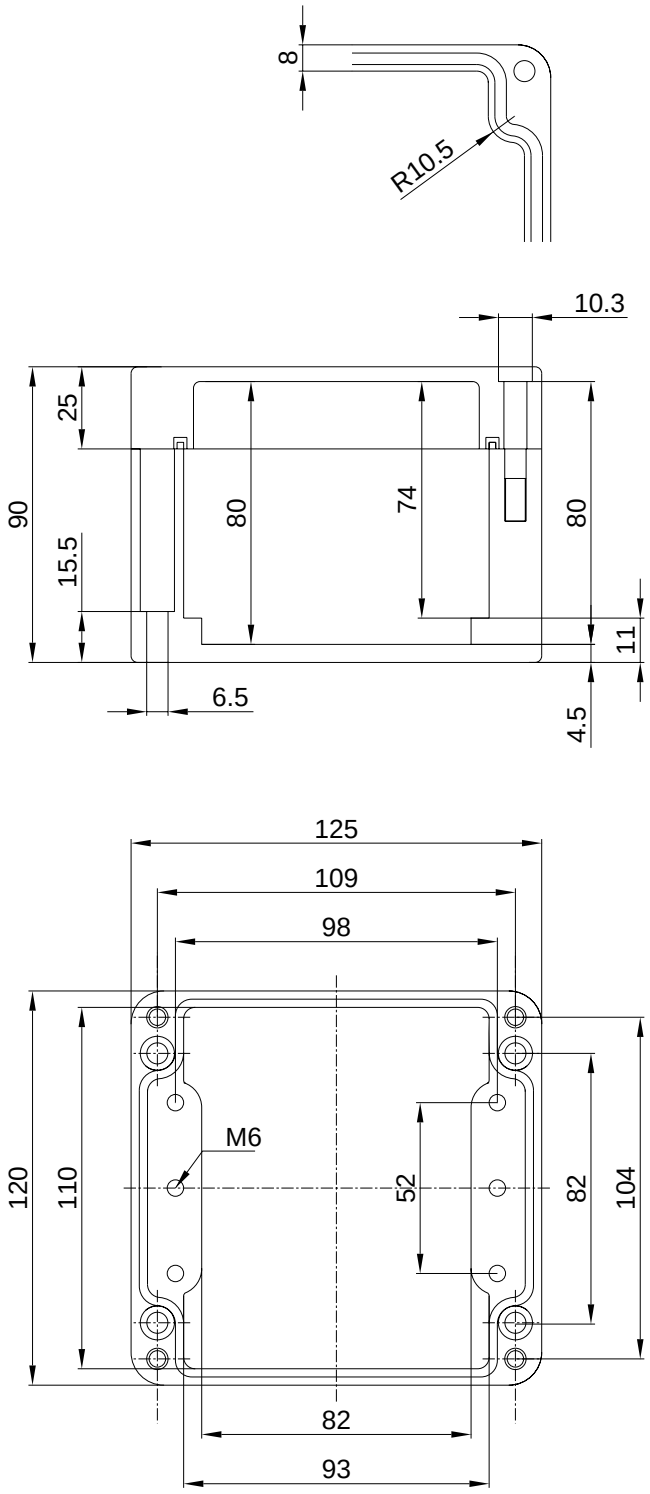

查询"127720"供应商

**POK 5**

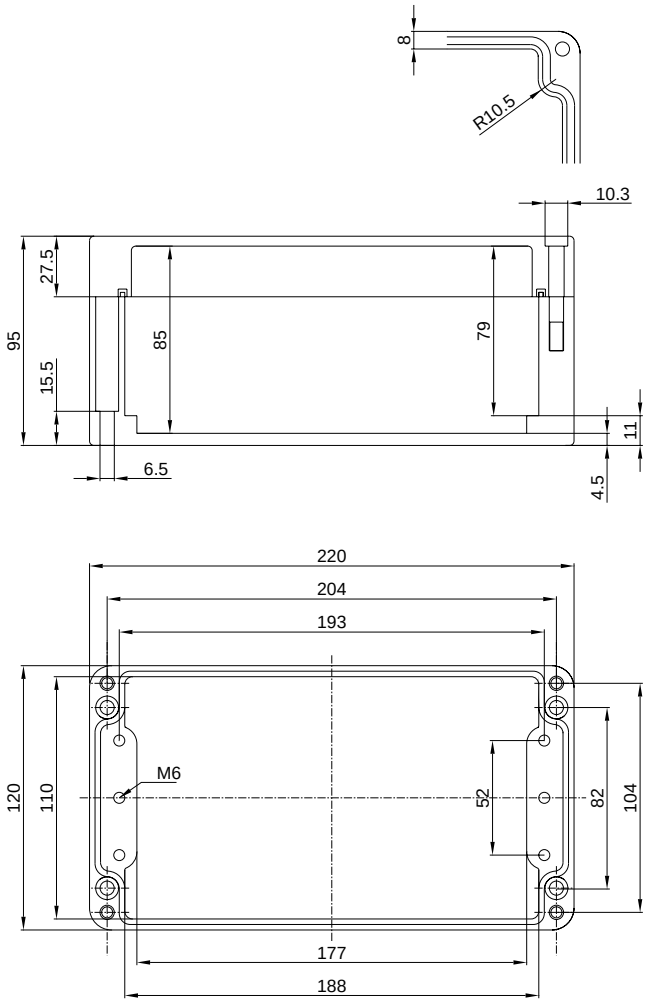


**POK 51**

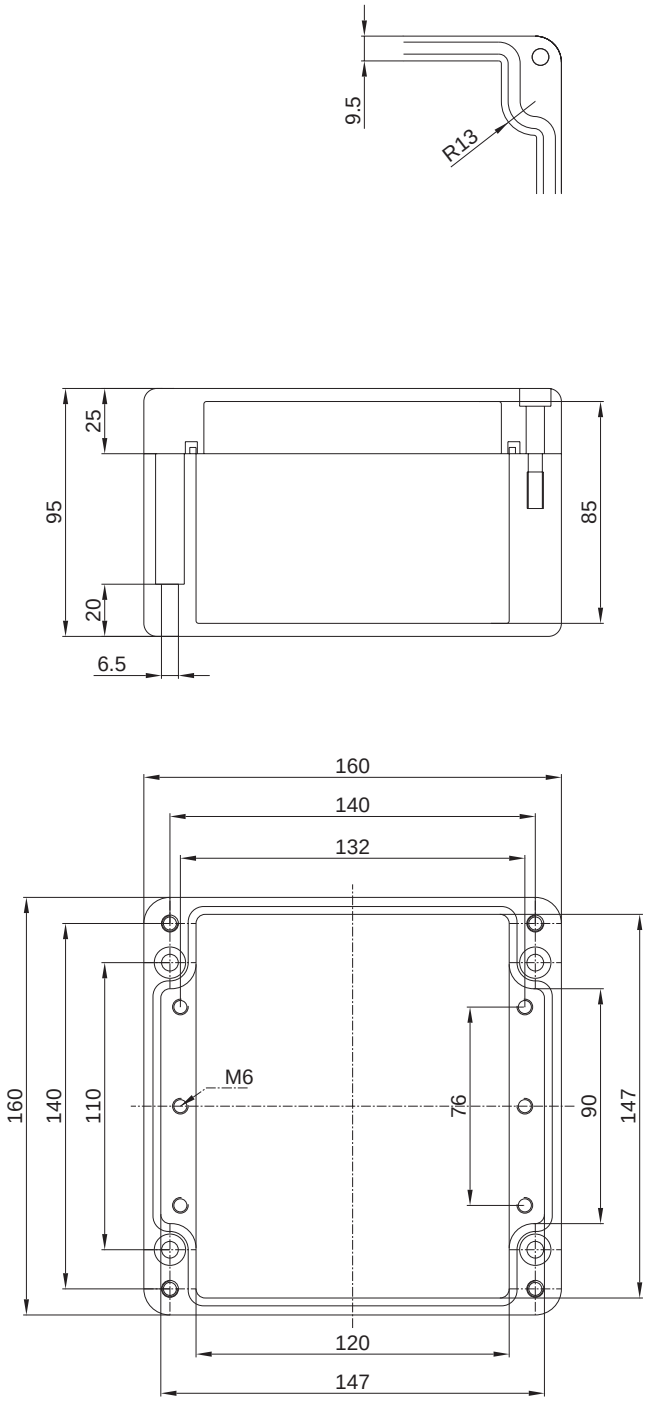

查询"127720"供应商

**POK 6**

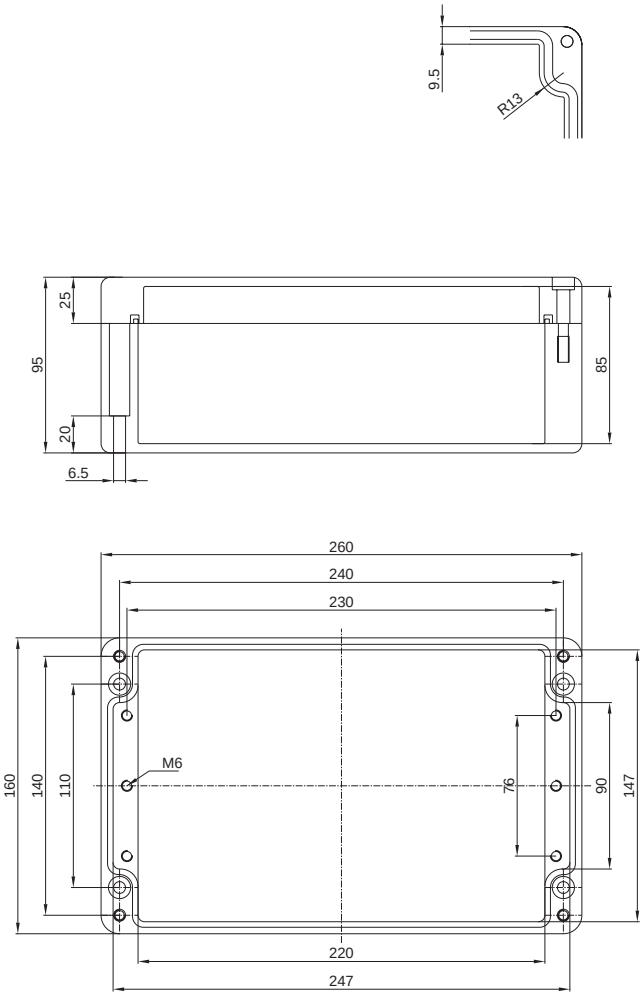


**POK 7**

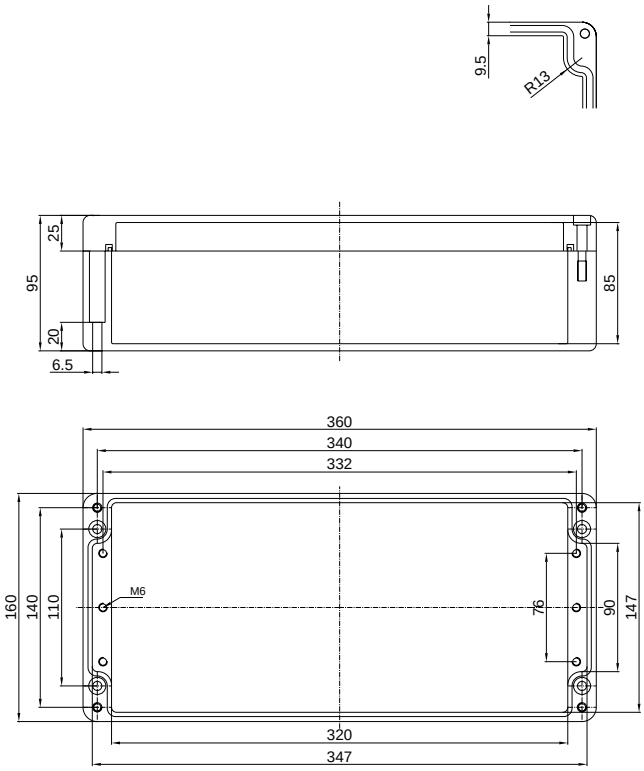

查询"127720"供应商

**POK 71**

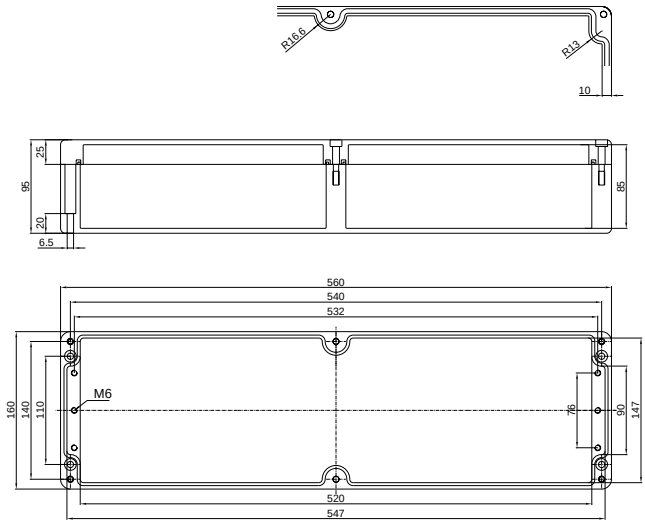


**POK 8**

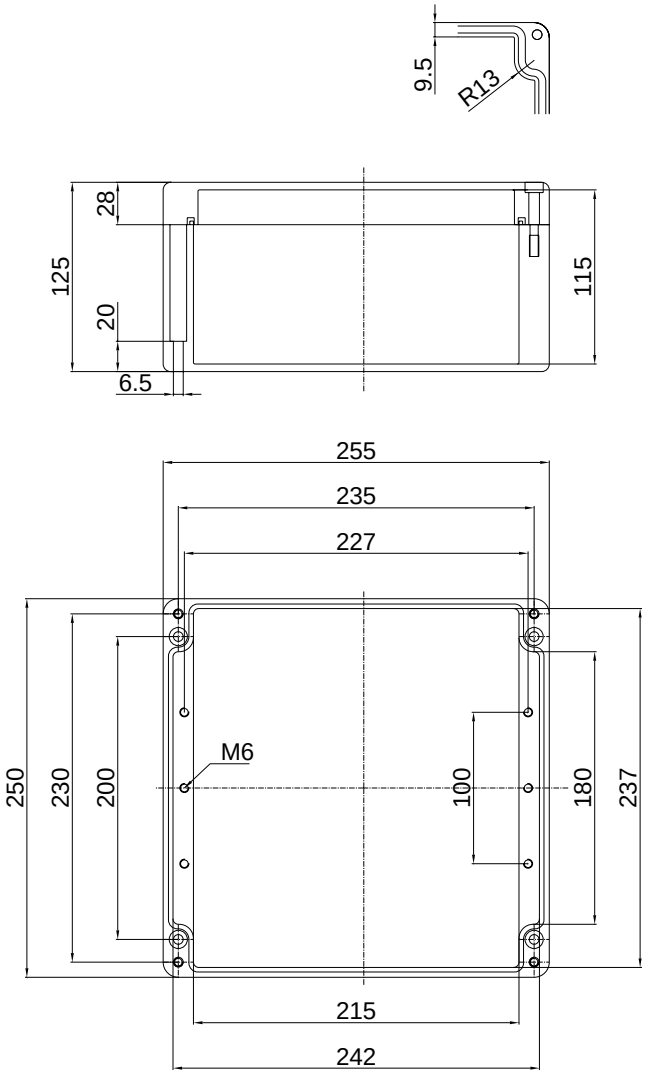

查询"127720"供应商

**POK 9**

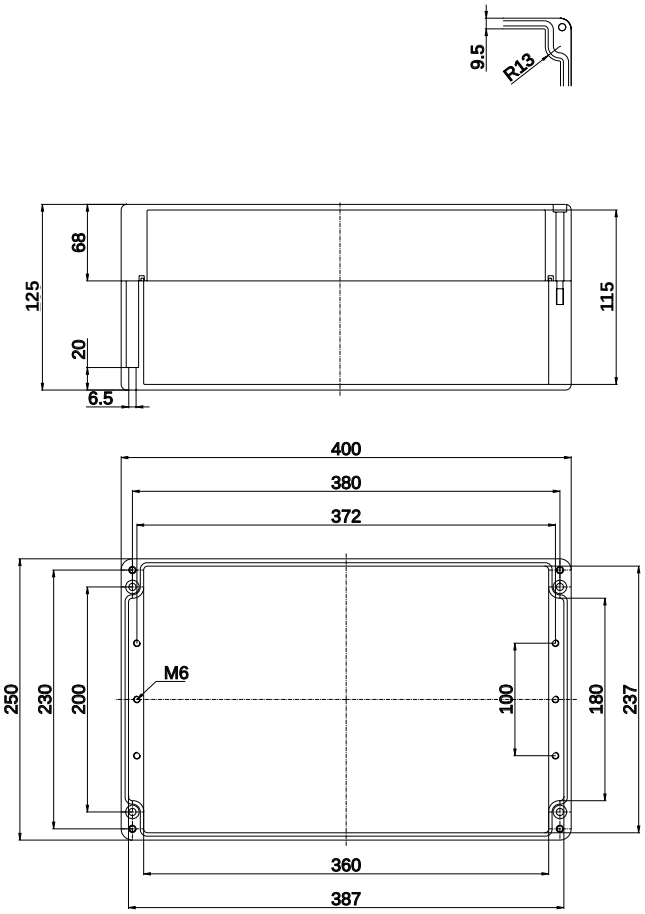


**POK 91**

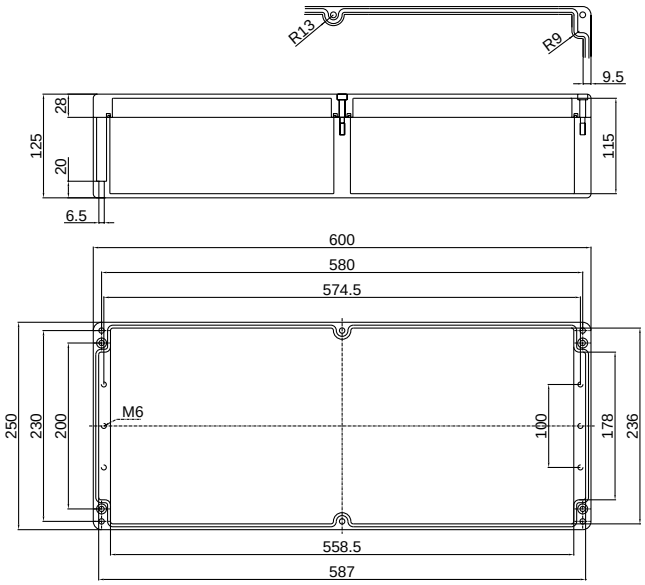

查询"127720"供应商
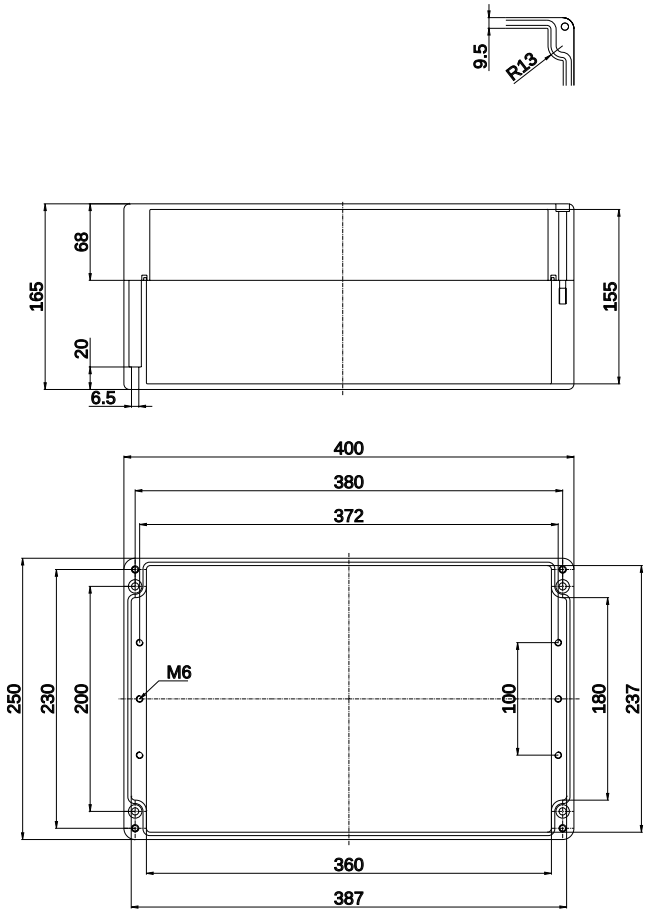
**POK 12**