THIS DRAWING IS UNPUBLISHED. RELEASED FOR PUBLICATION 20
© COPYRIGHT 20 BY TYCO ELECTRONICS CORPORATION ALL RIGHTS RESERVED.

LOC	DIST
FT	C

REVISIONS

P	LTR	DESCRIPTION	DATE	DWN	APVD
	-	SEE SHEET 1			

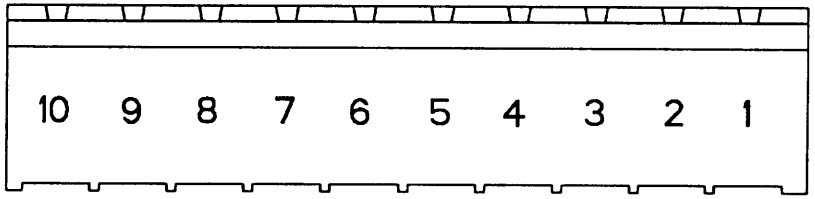

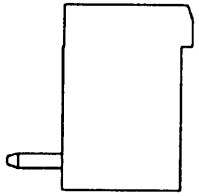

2-282813-6 AS SHOWN

1. MATERIALS AND FINISH
   HOUSING: PA 6-6, UL 94-V0
   TERMINAL: PHOSPHOR BRONZE, TIN PLATED.

2. SUITABLE FOR 1,6-2,4mm PC BOARD THICKNESS.

3. RECOGNIZED UNDER THE COMPONENT PROGRAM OF UNDERWRITERS LABORATORIES INC.FILE N° E60677.

4. IMO CERTIFICATE WITH SURVEILLANCE IN CONFORMITY WITH IEC 998-1/998-2-1.

5. NOT CUMULATIVE TOLERANCE.

6. INK MARKING, WHITE COLOR.

查询"282813-2"供应商

THIS DRAWING IS A CERTIFIED DOCUMENT FOR TYCO ELECTRONICS CORPORATION. IT IS SUBJECT TO CHANGE AND THE CONTROLLING ENGINEERING ORGANIZATION SHOULD BE CONTACTED FOR THE LATEST REVISION.

DIMENSIONS: mm

TOLERANCES UNLESS OTHERWISE SPECIFIED:
0 PLC ±-
1 PLC ±-
2 PLC ±-
3 PLC ±-
4 PLC ±-
ANGLES ±-

MATERIAL 1

FINISH 1

DWN	05APR2001	E. ZANOLIN
CHK	05APR2001	D. BIEVENOUR
APVD	05APR2001	D. BIEVENOUR
PRODUCT SPEC	-	
APPLICATION SPEC	-	
WEIGHT	-	

BUCHANAN Tyco Electronics Harrisburg, PA 17105-3608

NAME: TERMINAL BLOCK, HEADER ASSY, 90deg, CLOSED ENDS, 5.08mm PITCH.

SIZE A3 | CAGE CODE | DRAWING NO 00779 C-282813 | REF TO -

CUSTOMER DRAWING | SCALE NTS | SHEET 2 OF 2 | REV D

AMP 1470-19 REV 31MAR2000

THIS DRAWING IS UNPUBLISHED. RELEASED FOR PUBLICATION 20
© COPYRIGHT 20 BY TYCO ELECTRONICS CORPORATION ALL RIGHTS RESERVED

LOC	DIST
FT	0

REVISIONS

P	LTR	DESCRIPTION	DATE	DWN	APVD
	C	REVISED PER 063F-0565-00	05APR200	EZ	DB
	D	REVISED PER 063F-0326-0	16JUL200	EZ	DB

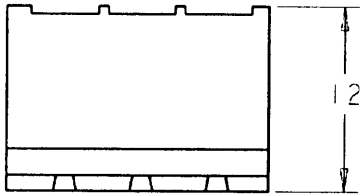

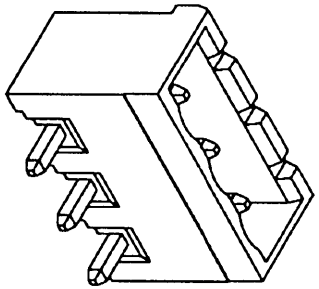

-3 AS SHOWN

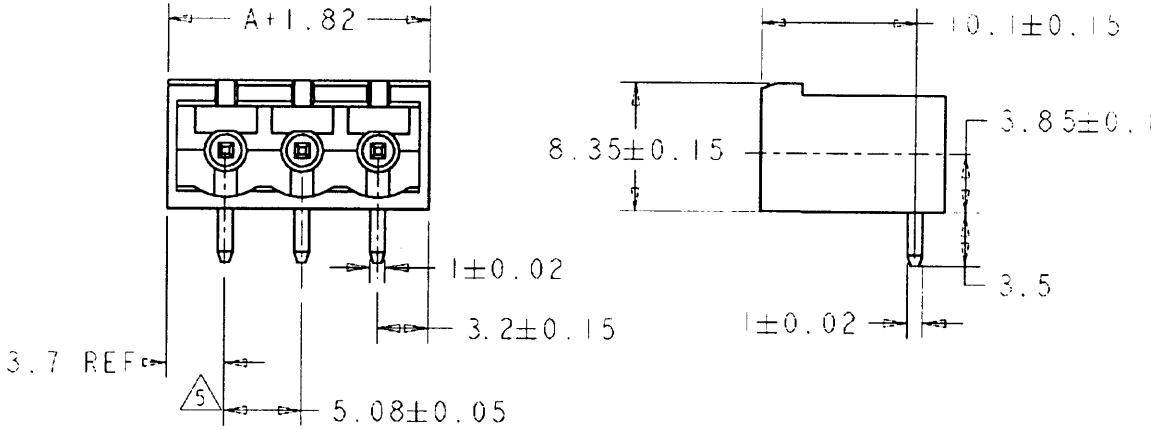

1-796638-6		GREEN	81.25	16	3-2828 3-
796639-6		BLACK	30.45	6	3-2828 3-0
796638-5		GREEN	25.40	5	2-2828 3-9
796639-4		BLACK	20.32	4	2-2828 3-8
796639-2		BLACK	10.16	2	2-2828 3-7
-	AS SHOWN	GREEN	50.80	10	2-2828 3-6
-		GREEN	27.00	25	2-2828 3-5
-		GREEN	71.92	24	2-2828 3-4
-		GREEN	76.84	23	2-2828 3-3
-		GREEN	71.76	22	2-2828 3-2
-		GREEN	66.68	21	2-2828 3-1
-		GREEN	61.60	20	2-2828 3-0
-		GREEN	96.52	19	-2828 3-9
-		GREEN	91.44	18	-2828 3-8
-		GREEN	86.36	17	-2828 3-7
-		GREEN	81.28	16	2828 3-6
-		GREEN	76.20	15	2828 3-5
-		GREEN	71.12	14	2828 3-4
-		GREEN	66.04	13	-2828 3-3
-		GREEN	60.96	12	-2828 3-2
-		GREEN	55.88	11	-2828 3-1
-		GREEN	50.80	10	2828 3-0
-		GREEN	45.72	9	2828 3-9
-		GREEN	40.64	8	2828 3-8
-		GREEN	35.56	7	2828 3-7
-		GREEN	30.48	6	2828 3-6
-		GREEN	25.40	5	2828 3-5
-		GREEN	20.32	4	2828 3-4
-		GREEN	15.24	3	2828 3-3
-		GREEN	10.16	2	2828 3-2
SUPERCEDED BY	MARKING 6	COLOR	DIM. A	No. POS	PART NUMBER

RECOMMENDED PC BOARD LAYOUT
(DIMA DI FORATURA CONSIGLIATA)

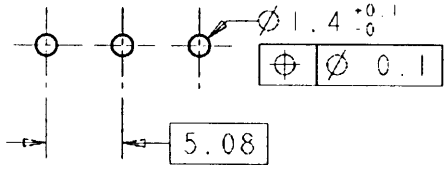

查询"282813-2"供应商

THIS DRAWING IS A DIGITAL PROJECT FOR THIS ELECTRONIC INFORMATION IT IS SUBJECT TO CHANGE AND THE CONTROLLING ENGINEERING ORGANIZATION SHOULD BE CONTACTED FOR THE LATEST REVISION.

DIMENSIONS: mm

TOLERANCES UNLESS OTHERWISE SPECIFIED:
0 PLC ±-
1 PLC ±0.2
2 PLC ±0.05
3 PLC ±-
4 PLC ±-
ANGLES ±0

MATERIAL -
FINISH -

DWN E. ZANOLINI 05APR2001
CHK D. BIEVENOUR 05APR2001
APVD D. BIEVENOUR 05APR2001
PRODUCT SPEC -
APPLICATION SPEC -
WEIGHT -

BUCHANAN Tyco Electronics Harrisburg, PA 17105-3608

NAME TERMINAL BLOCK, HEADER ASSY, 90deg. CLOSED ENDS, 5.08mm PITCH.

SIZE A3 CAGE CODE DRAWING NO 00779 C-2828 3 REV C

CUSTOMER DRAWING SCALE NTS SHEET OF 2 REV D

AMF 1473-9 REV 31MAR2000

Pro/ENGINEER DRAWING