U36D Series

查询"E36D101HPN822MC67M"供应商

UNITED CHEMI-CON

- Large Can
- Screw Terminals
- High Ripple
- Up to 550VDC Rated Voltage
- Dimensions in Inches
- RoHS Compliant
- +85°C Maximum Temperature

The U36D series is ideal for inverter applications requiring high ripple current capabilities. With a voltage range through 550 volts, the number of capacitors in series can be reduced. The U36D capacitors offer very large capacitance of up to 2.2F and a maximum operating temperature of +85°C. These capacitors are available with a variety of high current English or Metric thread terminals. Mounting options available are a three-footed clamp or bottom stud. (A special order two-footed clamp is also available for selected diameters.) All case size dimensions are based on inches. Custom designs are available upon request.

Summary of Specifications

- **Screw terminals: high and low post, English and Metric thread.**
- **Capacitance range: 68μF to 2.2F.**
- **Voltage range: 6.3 to 550VDC.**
- **Category temperature range: −40°C to +85°C.**
- **Leakage current: 0.02CV(μA) or 5mA, whichever is smaller, after 5 minutes at +25°C.**
- **Standard capacitance tolerance: ±20%**
- **Nominal case size (D×L): D = 35mm (1.375") to 89mm (3.500"); L = 41mm (1.625") to 220mm (8.625").**
- **Rated lifetime: 2,000 hours at +85°C with rated ripple current applied.**

找PDF 维库一下 pdf.dzsc.com

U36D Specifications - Screw Terminals

查询"E36D101HPN822MC67M"供应商

Item	Characteristics
Category Temperature Range	−40 to +85°C
Rated Voltage Range	6.3 to 550VDC
Capacitance Range	68μF to 2.2F at +25°C, 120Hz
Capacitance Tolerance	±20% (M) at +25°C, 120Hz
Leakage Current	I = 0.02CV (μA) or 5mA, whichever is smaller, after 5 minutes at +25°C. Where I = Max. leakage current (μA), C = Nominal capacitance (μF) and V = Rated voltage (V)
Rated Ripple Current Multipliers	Ambient Temperature (°C) ≤ +55°C: 2.39; +65°C: 2.22; +75°C: 1.67; +85°C: 1.00 Frequency (Hz) 50Hz: 0.8; 120Hz: 1.0; 300Hz: 1.1; 1kHz: 1.3; 3kHz: 1.4
Endurance (Load Life)	The following specifications shall be satisfied when the capacitors are restored to +25°C after subjecting them to DC voltage for 2,000 hours at +85°C with the rated ripple current applied. The sum of the DC voltage and peak AC voltage must not exceed the full rated voltage of the capacitors. Capacitance change: ≤ 20% from initial measurement ESR change : ≤ 300% of initial specified limit Leakage current : ≤ initial specified limit
Shelf Life	The following specifications shall be satisfied when the capacitors are restored to +25°C after exposing them for 500 hours at +85°C without voltage applied. The rated voltage shall be applied to the capacitors for a minimum of 30 minutes, at least 24 hours and not more than 48 hours before the measurements. Capacitance change: ≤ 20% from initial measurement ESR change : ≤ 300% of initial specified limit Leakage current : ≤ initial specified limit

Diagram of Dimensions - Screw Terminals

查询"E36D101HPN822MC67M"供应商

Large Can/Screw Terminals

Unit: inches (mm)

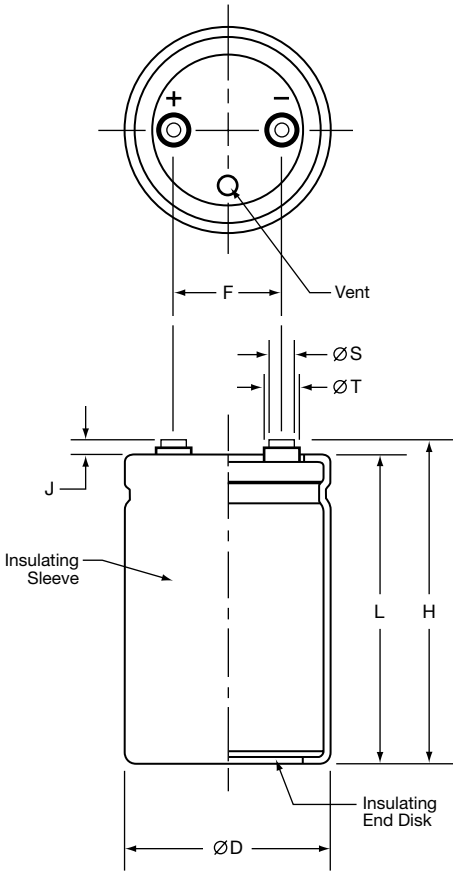

Case Dimensions

Case Size Code	øD +0.080 (2.0)	L ±0.040 (1.0)	F ±0.010 (0.25)
A41	1.375 (35.0)	1.625 (41)	0.500 (12.7)
A54		2.125 (54)	
A67		2.625 (67)	
A79		3.125 (79)	
A92		3.625 (92)	
AA5		4.125 (105)	
AB7		4.625 (117)	
AD0		5.125 (130)	
AE3		5.625 (143)	
C48	2.000 (50.8)	1.875 (48)	0.875 (22.2)
C54		2.125 (54)	
C67		2.625 (67)	
C79		3.125 (79)	
C92		3.625 (92)	
CA5		4.125 (105)	
CB7		4.625 (117)	
CD0		5.125 (130)	
CE3		5.625 (143)	
D79	2.500 (63.5)	3.125 (79)	1.125 (28.6)
DA5		4.125 (105)	
DB7		4.625 (117)	
DD0		5.125 (130)	
DE3		5.625 (143)	
E79	3.000 (76.2)	3.125 (79)	1.250 (31.8)
E92		3.625 (92)	
EA5		4.125 (105)	
EB7		4.625 (117)	
ED0		5.125 (130)	
EE3		5.625 (143)	
EN0		8.625 (220)	
FA5	3.500 (89.0)	4.125 (105)	1.250 (31.8)
FB7		4.625 (117)	
FD0		5.125 (130)	
FE3		5.625 (143)	

Terminal Specifications

Terminal Code	Available Case Diameter		Thread Size	Minimum Thread Depth	J ±0.020 (0.5)	H ±0.080 (2.0)	øS ±0.010 (0.25)	øT ±0.010 (0.25)
	øD Code	øD inches (mm)						
HP	C-E	1.375 – 3.000 (35.0 – 76.2)	10-32 NF-2B	0.375 (9.5)	0.250 (6.4)	L+J	0.313 (8.0)	0.438 (11.1)
LP	C-E	1.375 – 3.000 (35.0 – 76.2)	10-32 NF-2B	0.219 (5.6)	0.063 (1.6)	L+J	0.313 (8.0)	—
HL	C-E	1.375 – 3.000 (35.0 – 76.2)	M5x0.8-6H	0.375 (9.5)	0.250 (6.4)	L+J	0.313 (8.0)	0.438 (11.1)
ML	C-E	1.375 – 3.000 (35.0 – 76.2)	M5x0.8-6H	0.219 (5.6)	0.063 (1.6)	L+J	0.313 (8.0)	0.438 (11.1)
CD	D-E	2.500 – 3.000 (63.5 – 76.2)	M5x0.8-6H	0.335 (8.5)	0.200 (5.0)	L+J	0.512 (13.0)	0.740 (18.8)
CP	D-F	2.500 – 3.500 (63.5 – 89.0)	¼-28 NF-2B	0.344 (8.7)	0.093 (2.4)	L+J	0.689 (17.5)	—
CH	D-F	2.500 – 3.500 (63.5 – 89.0)	¼-28 NF-2B	0.468 (11.9)	0.250 (6.4)	L+J	0.689 (17.5)	—
CA	D-F	2.500 – 3.500 (63.5 – 89.0)	M6x1-6H	0.344 (8.7)	0.093 (2.4)	L+J	0.689 (17.5)	—
CS	D-F	2.500 – 3.500 (63.5 – 89.0)	M6x1-6H	0.468 (11.9)	0.250 (6.4)	L+J	0.689 (17.5)	—

Mounting Hardware - Screw Terminals

查询"E36D101HPN822MC67M"供应商

Type C: Three-Footed Clamp

Unit: mm (inches)

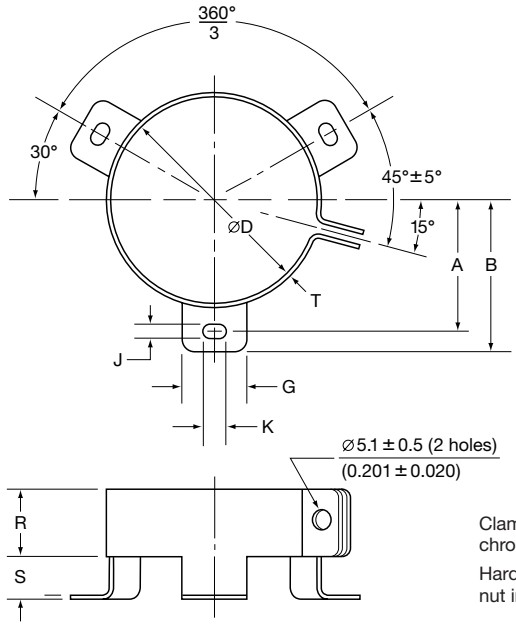

Clamp: Zinc with silver trivalent chromate post treatment.

Hardware: Screw, washer and hexagon nut included with each clamp.

Type C: Clamp Dimensions

Mounting Code	Case ØD	A ±1.0 (0.040)	B ±1.0 (0.040)	G ±1.0 (0.040)	J ±0.5 (0.020)	K ±0.5 (0.020)	R ±1.0 (0.040)	S ±1.0 (0.040)	T ±0.5 (0.020)
See Note	35.0 (1.375)	—	—	—	—	—	—	—	—
C	50.8 (2.000)	31.8 (1.250)	36.5 (1.437)	13.3 (0.524)	4.5 (0.177)	7.1 (0.280)	19.1 (0.751)	9.5 (0.374)	0.8 (0.032)
C	63.5 (2.500)	38.1 (1.500)	42.9 (1.689)	13.3 (0.524)	4.5 (0.177)	7.1 (0.280)	19.1 (0.751)	9.5 (0.374)	0.8 (0.032)
C	76.2 (3.000)	44.5 (1.750)	49.2 (1.937)	13.3 (0.524)	4.5 (0.177)	7.1 (0.280)	19.1 (0.751)	9.5 (0.374)	1.0 (0.040)
C	89.0 (3.500)	50.8 (2.000)	56.5 (2.224)	16.0 (0.630)	4.5 (0.177)	8.0 (0.313)	21.0 (0.827)	9.0 (0.354)	1.0 (0.040)

Note: Type B two-footed clamp available upon request for Ø35, Ø50.8, Ø63.5 and Ø76.2. Consult UCC for specifications.

Type S: Stud Mounting

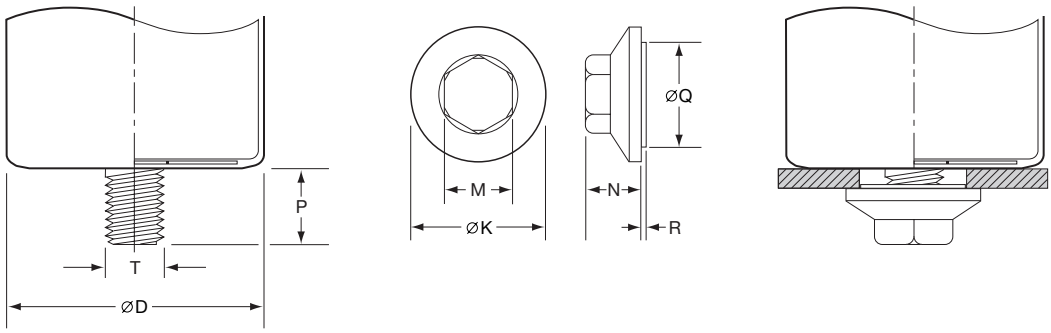

Type S: Stud Mounting Dimensions

Mounting Code	P ±1.0 (0.040)	T Thread Size	M ±1.0 (0.040)	N ±1.0 (0.040)	ØK ±2.0 (0.080)	ØQ ±1.0 (0.040)	R ±1.0 (0.040)
S	16.0 (0.630)	M12	19.0 (0.748)	18.0 (0.709)	30.0 (1.181)	22.0 (0.866)	1.40 (0.055)

Part Numbering System for U36D Series

When ordering, always specify complete 18-field global part number.

查询"E36D101HPN822MC67M"供应商

18 Fields

1	2	3	4	5	6	7	8	9	10	11	12	13	14	15	16	17	18
E	3	6	D	4	0	1	H	P	N	1	8	2	M	D	7	9	M

9 Supplement Code. Field 18.
- C = PET insulation with end disk.
- F = Coated can.
- M = Pb-free PVC insulation with end disk.

8 Case Size. Fields 15, 16 and 17.
The single letter diameter code is inserted in field 15.
- A = Ø35mm (Ø1.375")
- C = Ø50.8mm (Ø2.000")
- D = Ø63.5mm (Ø2.500")
- E = Ø76.2mm (Ø3.000")
- F = Ø89mm (Ø3.500")

The double character length code is inserted in fields 16 and 17. For lengths ≤99mm, insert the actual length rounded to nearest millimeter. For lengths of 100mm or more, insert the appropriate alpha numeric code as indicated below.
- 41 = 41mm (1.625")
- 48 = 48mm (1.875")
- 54 = 54mm (2.125")
- 67 = 67mm (2.625")
- 79 = 79mm (3.125")
- 92 = 92mm (3.625")
- A5 = 105mm (4.125")
- B7 = 117mm (4.625")
- D0 = 130mm (5.125")
- E3 = 143mm (5.625")
- N0 = 220mm (8.625")

7 Capacitance Tolerance. Field 14.
- M = ±20%

6 Capacitance. Fields 11, 12 and 13.
Expressed in Microfarads. The first two digits are significant figures inserted in fields 11 and 12, and the third digit inserted in field 13 indicates the number of zeros for capacitance of 10μF or more. R indicates the decimal point for capacitance less than 10μF (e.g. 1R8 = 1.8μF; 180 = 18μF; 181 = 180μF; 182 = 1,800μF; 183 = 18,000μF).

5 Mounting Hardware. Field 10.
- N = None.
- B = Two-footed clamp.
- C = Three-footed clamp.
- S = Stud mount.

4 Terminal Type. Fields 8 and 9.
- HP = High post 10-32 NF-2B screw thread.
- LP = Low post 10-32 NF-2B screw thread.
- HL = High post M5x0.8 screw thread.
- ML = Low post M5x0.8 screw thread.
- CD = UTE M5x0.8 screw thread.
- CP = Low post 1/4-28 NF-2B screw thread.
- CH = High post 1/4-28 NF-2B screw thread.
- CA = Low post M6x1 screw thread.
- CS = High post M6x1 screw thread.

3 DC Rated Voltage. Fields 5, 6 and 7.
Expressed in Volts. The first two digits are significant figures inserted in fields 5 and 6, and the third digit inserted in field 7 indicates the number of zeros for rated voltage of 10VDC or more. R indicates the decimal point for rated voltage less than 10VDC (e.g. 4R0 = 4.0VDC; 400 = 40VDC; 401 = 400VDC).

2 Series Name. Fields 2, 3 and 4.
Enter the 3-letter/digit series name in fields 2, 3 and 4. If the series name is only 2 letters/digits, place a dash in field 4. For a series name with more than 3 letters/digits, refer to the individual series for the appropriate 3-field series name.

1 Capacitor Type. Field 1.
Aluminum Electrolytic Capacitor (Polar).

Standard Voltage Ratings - Screw Terminals

查询"E36D101HPN822MC67M"供应商

Rated Voltage (WVDC)	Capacitance (µF)	Global Part Number†	Nominal Case Size* D×L (inches)	Case Size Code	Maximum ESR (mΩ) at +25°C, 120Hz	Rated Ripple Current (A rms) at +85°C, 120Hz
6.3 Volts 8 Volts Surge	39,000	E36D6R3HPN393MA41M	1.375 × 1.625	A41	42.7	4.48
	68,000	E36D6R3HPN683MA54M	1.375 × 2.125	A54	25.5	6.35
	120,000	E36D6R3HPN124MA79M	1.375 × 3.125	A79	15.4	9.47
	180,000	E36D6R3HPN184MAA5M	1.375 × 4.125	AA5	11.2	11.10
	220,000	E36D6R3HPN224MAB7M	1.375 × 4.625	AB7	9.8	12.55
	270,000	E36D6R3HPN274MAE3M	1.375 × 5.625	AE3	8.4	15.27
	120,000	E36D6R3HPN124MC54M	2.000 × 2.125	C54	16.9	7.72
	220,000	E36D6R3HPN224MC67M	2.000 × 2.625	C67	9.1	10.85
	270,000	E36D6R3HPN274MC79M	2.000 × 3.125	C79	8.8	12.60
	390,000	E36D6R3HPN394MC92M	2.000 × 3.625	C92	7.5	15.71
	470,000	E36D6R3HPN474MCB7M	2.000 × 4.625	CB7	5.8	17.95
	560,000	E36D6R3HPN564MCD0M	2.000 × 5.125	CD0	5.2	19.94
	680,000	E36D6R3HPN684MCE3M	2.000 × 5.625	CE3	5.0	22.31
	470,000	E36D6R3HPN474MD79M	2.500 × 3.125	D79	8.9	15.39
	680,000	E36D6R3HPN684MDA5M	2.500 × 4.125	DA5	6.5	20.69
	820,000	E36D6R3HPN824MDB7M	2.500 × 4.625	DB7	5.8	21.02
	1,000,000	E36D6R3HPN105MDE3M	2.500 × 5.625	DE3	4.9	24.55
	680,000	E36D6R3HPN684ME79M	3.000 × 3.125	E79	10.0	17.32
	820,000	E36D6R3HPN824ME92M	3.000 × 3.625	E92	8.6	19.55
	1,000,000	E36D6R3HPN105MEA5M	3.000 × 4.125	EA5	7.5	22.10
	1,200,000	E36D6R3HPN125MEB7M	3.000 × 4.625	EB7	6.8	24.59
	1,500,000	E36D6R3HPN155MEE3M	3.000 × 5.625	EE3	5.6	29.17
	2,200,000	E36D6R3HPN225MEN0M	3.000 × 8.625	EN0	3.9	41.67
10 Volts 13 Volts Surge	33,000	E36D100HPN333MA41M	1.375 × 1.625	A41	40.9	3.65
	56,000	E36D100HPN563MA54M	1.375 × 2.125	A54	25.0	4.99
	82,000	E36D100HPN823MA67M	1.375 × 2.625	A67	18.0	6.44
	100,000	E36D100HPN104MA79M	1.375 × 3.125	A79	15.0	7.65
	120,000	E36D100HPN124MA92M	1.375 × 3.625	A92	12.9	8.45
	150,000	E36D100HPN154MAA5M	1.375 × 4.125	AA5	10.9	10.03
	180,000	E36D100HPN184MAB7M	1.375 × 4.625	AB7	10.6	11.24
	220,000	E36D100HPN224MAE3M	1.375 × 5.625	AE3	8.3	12.71
	82,000	E36D100HPN823MC48M	2.000 × 1.875	C48	21.0	6.36
	100,000	E36D100HPN104MC54M	2.000 × 2.125	C54	16.6	7.37
	150,000	E36D100HPN154MC67M	2.000 × 2.625	C67	11.5	9.18
	220,000	E36D100HPN224MC79M	2.000 × 3.125	C79	8.8	11.93
	270,000	E36D100HPN274MC92M	2.000 × 3.625	C92	7.4	13.07
	330,000	E36D100HPN334MCA5M	2.000 × 4.125	CA5	6.4	15.32
	390,000	E36D100HPN394MCB7M	2.000 × 4.625	CB7	5.7	16.35
	470,000	E36D100HPN474MCE3M	2.000 × 5.625	CE3	4.9	19.08
	330,000	E36D100HPN334MD79M	2.500 × 3.125	D79	8.7	12.77
	560,000	E36D100HPN564MDA5M	2.500 × 4.125	DA5	6.3	18.77
	680,000	E36D100HPN684MDB7M	2.500 × 4.625	DB7	5.7	19.14
	820,000	E36D100HPN824MDE3M	2.500 × 5.625	DE3	4.9	20.73
	680,000	E36D100HPN684ME92M	3.000 × 3.625	E92	8.9	18.43
	820,000	E36D100HPN824MEA5M	3.000 × 4.125	EA5	7.7	21.39
	1,000,000	E36D100HPN105MED0M	3.000 × 5.125	ED0	6.0	23.50
	1,200,000	E36D100HPN125MEE3M	3.000 × 5.625	EE3	5.7	26.84
	1,800,000	E36D100HPN185MEN0M	3.000 × 8.625	EN0	4.0	37.69
16 Volts 20 Volts Surge	22,000	E36D160HPN223MA41M	1.375 × 1.625	A41	44.2	3.16
	39,000	E36D160HPN393MA54M	1.375 × 2.125	A54	26.1	4.50
	56,000	E36D160HPN563MA67M	1.375 × 2.625	A67	19.0	5.63
	68,000	E36D160HPN683MA79M	1.375 × 3.125	A79	15.8	6.68
	82,000	E36D160HPN823MA92M	1.375 × 3.625	A92	13.5	7.86
	100,000	E36D160HPN104MAA5M	1.375 × 4.125	AA5	11.6	9.23
	120,000	E36D160HPN124MAB7M	1.375 × 4.625	AB7	10.2	10.33
	150,000	E36D160HPN154MAE3M	1.375 × 5.625	AE3	8.7	12.69
	56,000	E36D160HPN563MC48M	2.000 × 1.875	C48	21.7	5.51
	68,000	E36D160HPN683MC54M	2.000 × 2.125	C54	17.2	6.37

†For terminal, mounting and construction options, refer to the part numbering system for descriptions and codes.
*** Refer to diagram of dimensions for detailed case size specifications.**

Standard Voltage Ratings - Screw Terminals

查询"E36D101HPN822MC67M"供应商

Rated Voltage (WVDC)	Capacitance (µF)	Global Part Number†	Nominal Case Size* D×L (inches)	Case Size Code	Maximum ESR (mΩ) at +25°C, 120Hz	Rated Ripple Current (A rms) at +85°C, 120Hz
16 Volts 20 Volts Surge	120,000	E36D160HPN124MC54M	2.000 × 2.625	C54	12.2	9.00
	150,000	E36D160HPN154MC67M	2.000 × 3.125	C67	9.2	10.79
	220,000	E36D160HPN224MC92M	2.000 × 3.625	C92	6.7	13.19
	270,000	E36D160HPN274MCB7M	2.000 × 4.625	CB7	5.9	15.71
	330,000	E36D160HPN334MCE3M	2.000 × 5.625	CE3	5.1	19.03
	220,000	E36D160HPN224MD79M	2.500 × 3.125	D79	8.7	12.59
	390,000	E36D160HPN394MDA5M	2.500 × 4.125	DA5	6.3	18.91
	470,000	E36D160HPN474MDB7M	2.500 × 4.625	DB7	5.7	20.24
	560,000	E36D160HPN564MDE3M	2.500 × 5.625	DE3	4.9	24.15
	470,000	E36D160HPN474ME92M	3.000 × 3.625	E92	8.7	19.11
	560,000	E36D160HPN564MEA5M	3.000 × 4.125	EA5	7.5	22.05
	680,000	E36D160HPN684MEB7M	3.000 × 4.625	EB7	6.3	22.91
	820,000	E36D160HPN824MEE3M	3.000 × 5.625	EE3	5.6	25.28
	1,200,000	E36D160HPN125MEN0M	3.000 × 8.625	EN0	3.9	34.52
25 Volts 32 Volts Surge	15,000	E36D250HPN153MA41M	1.375 × 1.625	A41	44.0	3.05
	27,000	E36D250HPN273MA54M	1.375 × 2.125	A54	25.7	4.38
	39,000	E36D250HPN393MA67M	1.375 × 2.625	A67	18.7	5.50
	47,000	E36D250HPN473MA79M	1.375 × 3.125	A79	15.7	6.49
	56,000	E36D250HPN563MA92M	1.375 × 3.625	A92	13.5	7.60
	68,000	E36D250HPN683MAA5M	1.375 × 4.125	AA5	11.6	8.89
	82,000	E36D250HPN823MAB7M	1.375 × 4.625	AB7	10.2	9.99
	100,000	E36D250HPN104MAE3M	1.375 × 5.625	AE3	8.8	12.12
	39,000	E36D250HPN393MC48M	2.000 × 1.875	C48	21.7	5.66
	47,000	E36D250HPN473MC54M	2.000 × 2.125	C54	17.2	6.52
	82,000	E36D250HPN823MC67M	2.000 × 2.625	C67	12.2	9.15
	100,000	E36D250HPN104MC79M	2.000 × 3.125	C79	9.2	10.84
	150,000	E36D250HPN154MCA5M	2.000 × 4.125	CA5	6.7	13.66
	180,000	E36D250HPN184MCB7M	2.000 × 4.625	CB7	5.9	15.71
	220,000	E36D250HPN224MCE3M	2.000 × 5.625	CE3	5.1	19.03
	180,000	E36D250HPN184MD79M	2.500 × 3.125	D79	8.7	13.34
	270,000	E36D250HPN274MDA5M	2.500 × 4.125	DA5	6.3	18.44
	330,000	E36D250HPN334MDB7M	2.500 × 4.625	DB7	5.7	20.39
	390,000	E36D250HPN394MDE3M	2.500 × 5.625	DE3	5.0	24.24
	330,000	E36D250HPN334ME92M	3.000 × 3.625	E92	8.2	19.61
	390,000	E36D250HPN394MEA5M	3.000 × 4.125	EA5	7.8	22.54
	470,000	E36D250HPN474MEB7M	3.000 × 4.625	EB7	6.4	24.52
	560,000	E36D250HPN564MEE3M	3.000 × 5.625	EE3	5.7	26.73
	820,000	E36D250HPN824MEN0M	3.000 × 8.625	EN0	3.9	38.03
35 Volts 44 Volts Surge	10,000	E36D350HPN103MA41M	1.375 × 1.625	A41	47.1	2.57
	18,000	E36D350HPN103MA54M	1.375 × 2.125	A54	27.4	3.70
	27,000	E36D350HPN103MA67M	1.375 × 2.625	A67	19.3	4.73
	33,000	E36D350HPN103MA79M	1.375 × 3.125	A79	16.1	5.63
	39,000	E36D350HPN103MA92M	1.375 × 3.625	A92	13.9	6.56
	47,000	E36D350HPN103MAA5M	1.375 × 4.125	AA5	12.0	7.65
	56,000	E36D350HPN103MAB7M	1.375 × 4.625	AB7	10.6	8.54
	68,000	E36D350HPN103MAD0M	1.375 × 5.125	AD0	10.3	9.89
	22,000	E36D350HPN223MC48M	2.000 × 1.875	C48	22.4	4.32
	33,000	E36D350HPN333MC54M	2.000 × 2.125	C54	17.7	5.55
	56,000	E36D350HPN563MC67M	2.000 × 2.625	C67	12.5	7.68
	68,000	E36D350HPN683MC79M	2.000 × 3.125	C79	9.5	9.08
	100,000	E36D350HPN104MC92M	2.000 × 3.625	C92	8.0	11.09
	120,000	E36D350HPN124MCB7M	2.000 × 4.625	CB7	6.1	12.83
	150,000	E36D350HPN154MCE3M	2.000 × 5.625	CE3	5.9	15.04
	120,000	E36D350HPN124MD79M	2.500 × 3.125	D79	9.1	11.34
	180,000	E36D350HPN184MDA5M	2.500 × 4.125	DA5	6.7	15.68
	220,000	E36D350HPN224MDB7M	2.500 × 4.625	DB7	5.8	18.17
	270,000	E36D350HPN274MDE3M	2.500 × 5.625	DE3	5.0	22.01

†For terminal, mounting and construction options, refer to the part numbering system for descriptions and codes.
*** Refer to diagram of dimensions for detailed case size specifications.**

Standard Voltage Ratings - Screw Terminals

查询"E36D101HPN822MC67M"供应商

Rated Voltage (WVDC)	Capacitance (µF)	Global Part Number†	Nominal Case Size* D × L (inches)	Case Size Code	Maximum ESR (mΩ) at +25°C, 120Hz	Rated Ripple Current (A rms) at +85°C, 120Hz
35 Volts 44 Volts Surge	220,000	E36D350HPN224ME92M	3.000 × 3.625	E92	8.9	16.73
	270,000	E36D350HPN274MEA5M	3.000 × 4.125	EA5	7.8	19.58
	330,000	E36D350HPN334MED0M	3.000 × 5.125	ED0	6.0	22.72
	390,000	E36D350HPN394MEE3M	3.000 × 5.625	EE3	5.7	24.75
	560,000	E36D350HPN564MEN0M	3.000 × 8.625	EN0	3.9	35.94
50 Volts 63 Volts Surge	6,800	E36D500HPN682MA41M	1.375 × 1.625	A41	48.8	3.10
	12,000	E36D500HPN123MA54M	1.375 × 2.125	A54	28.7	4.34
	18,000	E36D500HPN183MA67M	1.375 × 2.625	A67	22.8	5.40
	22,000	E36D500HPN223MA79M	1.375 × 3.125	A79	16.8	6.39
	27,000	E36D500HPN273MA92M	1.375 × 3.625	A92	14.2	7.47
	33,000	E36D500HPN333MAA5M	1.375 × 4.125	AA5	12.1	8.57
	39,000	E36D500HPN393MAB7M	1.375 × 4.625	AB7	11.8	9.34
	47,000	E36D500HPN473MAE3M	1.375 × 5.625	AE3	9.3	11.03
	15,000	E36D500HPN153MC48M	2.000 × 1.875	C48	25.4	5.13
	22,000	E36D500HPN223MC54M	2.000 × 2.125	C54	18.4	6.42
	33,000	E36D500HPN333MC67M	2.000 × 2.625	C67	12.8	8.20
	47,000	E36D500HPN473MC79M	2.000 × 3.125	C79	9.7	10.09
	56,000	E36D500HPN563MC92M	2.000 × 3.625	C92	8.3	11.90
	68,000	E36D500HPN683MCA5M	2.000 × 4.125	CA5	7.1	13.36
	82,000	E36D500HPN823MCB7M	2.000 × 4.625	CB7	6.3	15.20
	100,000	E36D500HPN104MCE3M	2.000 × 5.625	CE3	5.4	17.99
	68,000	E36D500HPN683MD79M	2.500 × 3.125	D79	9.0	12.06
	120,000	E36D500HPN124MDA5M	2.500 × 4.125	DA5	6.6	15.71
	150,000	E36D500HPN154MDB7M	2.500 × 4.625	DB7	5.9	17.81
	180,000	E36D500HPN184MDE3M	2.500 × 5.625	DE3	5.0	20.74
	120,000	E36D500HPN124ME92M	3.000 × 3.625	E92	8.3	14.86
	150,000	E36D500HPN154MEA5M	3.000 × 4.125	EA5	7.3	16.74
	180,000	E36D500HPN184MEB7M	3.000 × 4.625	EB7	6.6	18.42
	220,000	E36D500HPN224MED0M	3.000 × 5.125	ED0	6.2	20.04
	390,000	E36D500HPN394MEN0M	3.000 × 8.625	EN0	4.0	31.15
63 Volts 79 Volts Surge	4,700	E36D630HPN472MA41M	1.375 × 1.625	A41	52.8	2.99
	8,200	E36D630HPN472MA54M	1.375 × 2.125	A54	31.2	4.17
	12,000	E36D630HPN472MA67M	1.375 × 2.625	A67	22.2	5.17
	15,000	E36D630HPN472MA79M	1.375 × 3.125	A79	18.2	6.15
	18,000	E36D630HPN472MA92M	1.375 × 3.625	A92	15.5	7.14
	22,000	E36D630HPN472MAA5M	1.375 × 4.125	AA5	13.2	8.22
	27,000	E36D630HPN472MAD0M	1.375 × 5.125	AD0	11.1	9.64
	33,000	E36D630HPN472MAE3M	1.375 × 5.625	AE3	9.7	10.75
	12,000	E36D630HPN123MC48M	2.000 × 1.875	C48	25.2	5.24
	15,000	E36D630HPN153MC54M	2.000 × 2.125	C54	19.8	6.21
	22,000	E36D630HPN223MC67M	2.000 × 2.625	C67	13.8	7.91
	33,000	E36D630HPN333MC79M	2.000 × 3.125	C79	11.2	9.85
	39,000	E36D630HPN393MC92M	2.000 × 3.625	C92	8.7	11.62
	47,000	E36D630HPN473MCA5M	2.000 × 4.125	CA5	7.5	13.01
	56,000	E36D630HPN563MCB7M	2.000 × 4.625	CB7	6.7	14.74
	68,000	E36D630HPN683MCE3M	2.000 × 5.625	CE3	5.7	17.51
	47,000	E36D630HPN473MD79M	2.500 × 3.125	D79	9.3	11.86
	82,000	E36D630HPN823MDA5M	2.500 × 4.125	DA5	6.8	15.60
	100,000	E36D630HPN104MDB7M	2.500 × 4.625	DB7	6.0	17.66
	120,000	E36D630HPN124MDE3M	2.500 × 5.625	DE3	5.2	20.55
	100,000	E36D630HPN104ME92M	3.000 × 3.625	E92	9.1	14.20
	120,000	E36D630HPN124MEA5M	3.000 × 4.125	EA5	7.9	16.10
	150,000	E36D630HPN154MED0M	3.000 × 5.125	ED0	6.2	19.88
	180,000	E36D630HPN184MEE3M	3.000 × 5.625	EE3	5.9	21.42
	270,000	E36D630HPN274MEN0M	3.000 × 8.625	EN0	4.1	31.94

†For terminal, mounting and construction options, refer to the part numbering system for descriptions and codes.
*** Refer to diagram of dimensions for detailed case size specifications.**

Standard Voltage Ratings - Screw Terminals

查询"E36D101HPN822MC67M"供应商

Rated Voltage (WVDC)	Capacitance (µF)	Global Part Number†	Nominal Case Size* D×L (inches)	Case Size Code	Maximum ESR (mΩ) at +25°C, 120Hz	Rated Ripple Current (A rms) at +85°C, 120Hz
80 Volts 100 Volts Surge	2,700	E36D800HPN272MA41M	1.375 × 1.625	A41	61.9	2.77
	4,700	E36D800HPN472MA54M	1.375 × 2.125	A54	36.4	3.87
	5,600	E36D800HPN562MA67M	1.375 × 2.625	A67	30.0	4.44
	8,200	E36D800HPN822MA79M	1.375 × 3.125	A79	21.7	5.65
	10,000	E36D800HPN103MA92M	1.375 × 3.625	A92	18.2	6.60
	12,000	E36D800HPN123MAA5M	1.375 × 4.125	AA5	15.6	7.56
	15,000	E36D800HPN153MAD0M	1.375 × 5.125	AD0	12.9	8.93
	18,000	E36D800HPN183MAE3M	1.375 × 5.625	AE3	12.8	9.99
	5,600	E36D800HPN562MC48M	2.000 × 1.875	C48	32.5	4.62
	8,200	E36D800HPN822MC54M	2.000 × 2.125	C54	23.2	5.59
	12,000	E36D800HPN123MC67M	2.000 × 2.625	C67	16.1	7.32
	18,000	E36D800HPN183MC79M	2.000 × 3.125	C79	13.0	9.22
	22,000	E36D800HPN223MC92M	2.000 × 3.625	C92	9.8	10.95
	27,000	E36D800HPN273MCA5M	2.000 × 4.125	CA5	9.8	12.39
	33,000	E36D800HPN333MCB7M	2.000 × 4.625	CB7	8.0	14.12
	39,000	E36D800HPN393MCE3M	2.000 × 5.625	CE3	6.3	16.65
	27,000	E36D800HPN273MD79M	2.500 × 3.125	D79	10.1	11.34
	39,000	E36D800HPN393MDA5M	2.500 × 4.125	DA5	7.4	15.07
	56,000	E36D800HPN563MDD0M	2.500 × 5.125	DD0	5.9	18.51
	47,000	E36D800HPN473ME92M	3.000 × 3.625	E92	8.7	14.52
	56,000	E36D800HPN563MEA5M	3.000 × 4.125	EA5	7.5	16.51
	68,000	E36D800HPN683MEB7M	3.000 × 4.625	EB7	6.7	18.28
	82,000	E36D800HPN823MED0M	3.000 × 5.125	ED0	6.2	19.88
	100,000	E36D800HPN104MEE3M	3.000 × 5.625	EE3	5.5	21.42
	120,000	E36D800HPN124MEN0M	3.000 × 8.625	EN0	4.1	31.53
100 Volts 125 Volts Surge	1,800	E36D101HPN182MA41M	1.375 × 1.625	A41	72.1	2.57
	2,700	E36D101HPN272MA54M	1.375 × 2.125	A54	47.5	3.39
	3,900	E36D101HPN392MA67M	1.375 × 2.625	A67	33.6	4.21
	4,700	E36D101HPN472MA79M	1.375 × 3.125	A79	28.1	4.97
	5,600	E36D101HPN562MA92M	1.375 × 3.625	A92	23.6	6.22
	8,200	E36D101HPN822MAB7M	1.375 × 4.625	AB7	17.2	7.39
	10,000	E36D101HPN103MAD0M	1.375 × 5.125	AD0	14.7	8.41
	3,900	E36D101HPN392MC48M	2.000 × 1.875	C48	36.4	4.38
	5,600	E36D101HPN562MC54M	2.000 × 2.125	C54	26.2	5.41
	8,200	E36D101HPN822MC67M	2.000 × 2.625	C67	18.2	6.92
	10,000	E36D101HPN103MC79M	2.000 × 3.125	C79	14.8	8.23
	15,000	E36D101HPN153MC92M	2.000 × 3.625	C92	12.5	10.38
	18,000	E36D101HPN183MCB7M	2.000 × 4.625	CB7	9.0	12.65
	22,000	E36D101HPN223MCD0M	2.000 × 5.125	CD0	7.8	14.15
	27,000	E36D101HPN273MCE3M	2.000 × 5.625	CE3	7.6	15.91
	18,000	E36D101HPN183MD79M	2.500 × 3.125	D79	11.2	10.83
	27,000	E36D101HPN273MDA5M	2.500 × 4.125	DA5	8.0	14.41
	33,000	E36D101HPN333MDB7M	2.500 × 4.625	DB7	7.1	16.47
	39,000	E36D101HPN393MDE3M	2.500 × 5.625	DE3	6.0	19.15
	33,000	E36D101HPN333ME92M	3.000 × 3.625	E92	9.3	14.05
	39,000	E36D101HPN393MEA5M	3.000 × 4.125	EA5	8.0	16.00
	47,000	E36D101HPN473MEB7M	3.000 × 4.625	EB7	7.2	17.65
	56,000	E36D101HPN563MED0M	3.000 × 5.125	ED0	6.6	19.42
	82,000	E36D101HPN823MEN0M	3.000 × 8.625	EN0	4.3	30.41
160 Volts 200 Volts Surge	820	E36D161HPN821MA41M	1.375 × 1.625	A41	202.0	1.95
	1,500	E36D161HPN152MA54M	1.375 × 2.125	A54	110.0	2.83
	2,200	E36D161HPN222MA67M	1.375 × 2.625	A67	76.9	3.57
	2,700	E36D161HPN272MA79M	1.375 × 3.125	A79	57.4	4.26
	3,300	E36D161HPN332MA92M	1.375 × 3.625	A92	51.1	5.05
	3,900	E36D161HPN392MAA5M	1.375 × 4.125	AA5	43.6	5.83
	4,700	E36D161HPN472MAB7M	1.375 × 4.625	AB7	36.7	6.55
	5,600	E36D161HPN562MAE3M	1.375 × 5.625	AE3	31.0	7.85

†For terminal, mounting and construction options, refer to the part numbering system for descriptions and codes.
*** Refer to diagram of dimensions for detailed case size specifications.**

Standard Voltage Ratings - Screw Terminals

查询"E36D101HPN822MC67M"供应商

Rated Voltage (WVDC)	Capacitance (µF)	Global Part Number†	Nominal Case Size* D × L (inches)	Case Size Code	Maximum ESR (mΩ) at +25°C, 120Hz	Rated Ripple Current (A rms) at +85°C, 120Hz
160 Volts 200 Volts Surge	2,200	E36D161HPN222MC48M	2.000 × 1.875	C48	80.9	3.86
	2,700	E36D161HPN272MC54M	2.000 × 2.125	C54	64.7	4.49
	3,900	E36D161HPN392MC67M	2.000 × 2.625	C67	44.7	5.73
	5,600	E36D161HPN562MC79M	2.000 × 3.125	C79	31.8	7.37
	8,200	E36D161HPN822MC92M	2.000 × 3.625	C92	22.4	9.53
	10,000	E36D161HPN103MCB7M	2.000 × 4.625	CB7	18.4	11.71
	12,000	E36D161HPN123MCD0M	2.000 × 5.125	CD0	15.9	13.46
	10,000	E36D161HPN103MD79M	2.500 × 3.125	D79	21.5	11.23
	15,000	E36D161HPN153MDA5M	2.500 × 4.125	DA5	14.9	15.52
	18,000	E36D161HPN183MDB7M	2.500 × 4.625	DB7	12.5	17.82
	22,000	E36D161HPN223MDE3M	2.500 × 5.625	DE3	10.6	21.54
	18,000	E36D161HPN183ME92M	3.000 × 3.625	E92	15.2	17.74
	22,000	E36D161HPN223MEA5M	3.000 × 4.125	EA5	12.9	20.73
	27,000	E36D161HPN273MED0M	3.000 × 5.125	ED0	10.3	25.17
	33,000	E36D161HPN333MEE3M	3.000 × 5.625	EE3	9.2	29.02
	47,000	E36D161HPN473MEN0M	3.000 × 8.625	EN0	6.7	41.98
200 Volts 250 Volts Surge	680	E36D201HPN681MA41M	1.375 × 1.625	A41	205.0	1.78
	1,000	E36D201HPN102MA54M	1.375 × 2.125	A54	137.0	2.31
	1,500	E36D201HPN152MA67M	1.375 × 2.625	A67	92.0	2.95
	1,800	E36D201HPN182MA79M	1.375 × 3.125	A79	76.6	3.48
	2,200	E36D201HPN222MA92M	1.375 × 3.625	A92	63.0	4.12
	2,700	E36D201HPN272MAA5M	1.375 × 4.125	AA5	51.8	4.85
	3,300	E36D201HPN332MAB7M	1.375 × 4.625	AB7	43.0	5.49
	3,900	E36D201HPN392MAD0M	1.375 × 5.125	AD0	36.8	6.27
	1,500	E36D201HPN152MC48M	2.000 × 1.875	C48	97.1	3.19
	2,200	E36D201HPN222MC54M	2.000 × 2.125	C54	67.0	4.05
	3,300	E36D201HPN332MC67M	2.000 × 2.625	C67	44.8	5.27
	3,900	E36D201HPN392MC79M	2.000 × 3.125	C79	37.4	6.15
	5,600	E36D201HPN562MC92M	2.000 × 3.625	C92	26.6	7.87
	8,200	E36D201HPN822MCB7M	2.000 × 4.625	CB7	18.9	10.60
	10,000	E36D201HPN103MCE3M	2.000 × 5.625	CE3	15.7	12.83
	6,800	E36D201HPN682MD79M	2.500 × 3.125	D79	24.9	9.26
	10,000	E36D201HPN103MDA5M	2.500 × 4.125	DA5	17.3	12.67
	12,000	E36D201HPN123MDB7M	2.500 × 4.625	DB7	14.5	14.55
	15,000	E36D201HPN153MDE3M	2.500 × 5.625	DE3	12.1	17.79
	12,000	E36D201HPN123ME92M	3.000 × 3.625	E92	17.0	14.49
	15,000	E36D201HPN153MEA5M	3.000 × 4.125	EA5	14.3	17.12
	18,000	E36D201HPN183MEB7M	3.000 × 4.625	EB7	12.4	19.64
	22,000	E36D201HPN223MED0M	3.000 × 5.125	ED0	10.8	22.72
	33,000	E36D201HPN333MEN0M	3.000 × 8.625	EN0	7.3	35.17
250 Volts 300 Volts Surge	470	E36D251HPN471MA41M	1.375 × 1.625	A41	271.2	1.48
	820	E36D251HPN821MA54M	1.375 × 2.125	A54	154.3	2.09
	1,200	E36D251HPN122MA67M	1.375 × 2.625	A67	105.8	2.64
	1,500	E36D251HPN152MA79M	1.375 × 3.125	A79	84.7	3.18
	1,800	E36D251HPN182MA92M	1.375 × 3.625	A92	70.8	3.73
	2,200	E36D251HPN222MAA5M	1.375 × 4.125	AA5	58.4	4.38
	2,700	E36D251HPN272MAD0M	1.375 × 5.125	AD0	47.8	5.21
	3,300	E36D251HPN332MAE3M	1.375 × 5.625	AE3	39.8	6.03
	1,200	E36D251HPN122MC48M	2.000 × 1.875	C48	111.5	2.85
	1,500	E36D251HPN152MC54M	2.000 × 2.125	C54	87.9	3.34
	2,200	E36D251HPN222MC67M	2.000 × 2.625	C67	59.8	4.31
	3,300	E36D251HPN332MC79M	2.000 × 3.125	C79	40.8	5.66
	3,900	E36D251HPN392MC92M	2.000 × 3.625	C92	34.4	6.57
	4,700	E36D251HPN472MCA5M	2.000 × 4.125	CA5	28.8	7.65
	5,600	E36D251HPN562MCB7M	2.000 × 4.625	CB7	24.5	8.76
	6,800	E36D251HPN682MCE3M	2.000 × 5.625	CE3	20.3	10.58
	4,700	E36D251HPN472MD79M	2.500 × 3.125	D79	31.0	7.70
	8,200	E36D251HPN822MDA5M	2.500 × 4.125	DA5	19.2	11.47

†For terminal, mounting and construction options, refer to the part numbering system for descriptions and codes.
*** Refer to diagram of dimensions for detailed case size specifications.**

Standard Voltage Ratings - Screw Terminals

查询"E36D101HPN822MC67M"供应商

Rated Voltage (WVDC)	Capacitance (µF)	Global Part Number†	Nominal Case Size* D×L (inches)	Case Size Code	Maximum ESR (mΩ) at +25°C, 120Hz	Rated Ripple Current (A rms) at +85°C, 120Hz
250 Volts 300 Volts Surge	10,000	E36D251HPN103MDB7M	2.500 × 4.625	DB7	18.4	13.28
	12,000	E36D251HPN123MDE3M	2.500 × 5.625	DE3	13.6	15.91
	10,000	E36D251HPN103ME92M	3.000 × 3.625	E92	18.8	13.22
	12,000	E36D251HPN123MEA5M	3.000 × 4.125	EA5	15.9	15.31
	15,000	E36D251HPN153MED0M	3.000 × 5.125	ED0	12.6	18.76
	18,000	E36D251HPN183MEE3M	3.000 × 5.625	EE3	11.2	21.43
	27,000	E36D251HPN273MEN0M	3.000 × 8.625	EN0	7.7	31.82
315 Volts 365 Volts Surge	390	E36D3B1HPN391MA54M	1.375 × 2.125	A54	513.0	1.44
	560	E36D3B1HPN391MA67M	1.375 × 2.625	A67	356.0	1.80
	820	E36D3B1HPN821MA79M	1.375 × 3.125	A79	243.0	2.35
	1,000	E36D3B1HPN102MA92M	1.375 × 3.625	A92	200.0	2.78
	1,200	E36D3B1HPN122MAB7M	1.375 × 4.625	AB7	166.0	3.31
	1,500	E36D3B1HPN152MAD0M	1.375 × 5.125	AD0	133.0	3.89
	560	E36D3B1HPN561MC48M	2.000 × 1.875	C48	366.0	1.95
	820	E36D3B1HPN821MC54M	2.000 × 2.125	C54	248.0	2.47
	1,200	E36D3B1HPN122MC67M	2.000 × 2.625	C67	168.0	3.18
	1,500	E36D3B1HPN152MC79M	2.000 × 3.125	C79	134.0	3.81
	2,200	E36D3B1HPN222MC92M	2.000 × 3.625	C92	92.0	4.94
	2,700	E36D3B1HPN272MCB7M	2.000 × 4.625	CB7	74.9	6.09
	3,300	E36D3B1HPN332MCD0M	2.000 × 5.125	CD0	61.8	7.06
	3,900	E36D3B1HPN392MCE3M	2.000 × 5.625	CE3	52.5	8.01
	2,700	E36D3B1HPN272MD79M	2.500 × 3.125	D79	77.5	5.83
	3,900	E36D3B1HPN392MDA5M	2.500 × 4.125	DA5	53.8	7.91
	4,700	E36D3B1HPN472MDB7M	2.500 × 4.625	DB7	44.7	9.11
	5,600	E36D3B1HPN562MDD0M	2.500 × 5.125	DD0	38.1	10.41
	4,700	E36D3B1HPN472ME92M	3.000 × 3.625	E92	46.8	9.07
	5,600	E36D3B1HPN562MEA5M	3.000 × 4.125	EA5	39.4	10.46
	6,800	E36D3B1HPN682MEB7M	3.000 × 4.625	EB7	32.9	12.07
	8,200	E36D3B1HPN822MED0M	3.000 × 5.125	ED0	27.8	13.87
	15,000	E36D3B1HPN153MEN0M	3.000 × 8.625	EN0	15.9	23.71
350 Volts 400 Volts Surge	220	E36D351HPN221MA41M	1.375 × 1.625	A41	887.0	1.17
	330	E36D351HPN331MA54M	1.375 × 2.125	A54	545.0	1.53
	470	E36D351HPN471MA67M	1.375 × 2.625	A67	379.0	1.91
	680	E36D351HPN681MA79M	1.375 × 3.125	A79	262.0	2.47
	820	E36D351HPN821MA92M	1.375 × 3.625	A92	217.0	2.91
	1,000	E36D351HPN102MAA5M	1.375 × 4.125	AA5	178.0	3.41
	1,200	E36D351HPN122MAD0M	1.375 × 5.125	AD0	148.0	4.01
	470	E36D351HPN471MC48M	2.000 × 1.875	C48	390.0	2.06
	680	E36D351HPN681MC54M	2.000 × 2.125	C54	267.0	2.60
	1,000	E36D351HPN102MC67M	2.000 × 2.625	C67	180.0	3.35
	1,200	E36D351HPN122MC79M	2.000 × 3.125	C79	149.0	3.94
	1,800	E36D351HPN182MC92M	2.000 × 3.625	C92	100.0	5.15
	2,200	E36D351HPN222MCA5M	2.000 × 4.125	CA5	82.5	6.04
	2,700	E36D351HPN272MCB7M	2.000 × 4.625	CB7	67.3	7.03
	3,300	E36D351HPN332MCE3M	2.000 × 5.625	CE3	55.3	8.51
	2,200	E36D351HPN222MD79M	2.500 × 3.125	D79	84.5	6.08
	3,300	E36D351HPN332MDA5M	2.500 × 4.125	DA5	56.6	8.40
	3,900	E36D351HPN392MDB7M	2.500 × 4.625	DB7	47.9	9.58
	4,700	E36D351HPN472MDD0M	2.500 × 5.125	DD0	40.4	11.02
	3,900	E36D351HPN392ME92M	3.000 × 3.625	E92	49.9	9.54
	4,700	E36D351HPN472MEA5M	3.000 × 4.125	EA5	41.7	11.06
	5,600	E36D351HPN562MEB7M	3.000 × 4.625	EB7	35.3	12.65
	6,800	E36D351HPN682MED0M	3.000 × 5.125	ED0	29.6	14.59
	8,200	E36D351HPN822MEE3M	3.000 × 5.625	EE3	25.1	16.70
	12,000	E36D351HPN123MEN0M	3.000 × 8.625	EN0	17.4	24.49
	6,800	E36D351LLN682MFA5M	3.500 × 4.125	FA5	32.0	11.39
	8,200	E36D351LLN822MFB7M	3.500 × 4.625	FB7	27.0	12.88
	10,000	E36D351LLN103MFE3M	3.500 × 5.625	FE3	23.0	15.17

†For terminal, mounting and construction options, refer to the part numbering system for descriptions and codes.
*** Refer to diagram of dimensions for detailed case size specifications.**

Standard Voltage Ratings - Screw Terminals

查询"E36D101HPN822MC67M"供应商

Rated Voltage (WVDC)	Capacitance (µF)	Global Part Number†	Nominal Case Size* D × L (inches)	Case Size Code	Maximum ESR (mΩ) at +25°C, 120Hz	Rated Ripple Current (A rms) at +85°C, 120Hz
400 Volts 450 Volts Surge	180	E36D401HPN181MA41M	1.375 × 1.625	A41	921.0	1.06
	330	E36D401HPN331MA54M	1.375 × 2.125	A54	495.0	1.53
	390	E36D401HPN391MA67M	1.375 × 2.625	A67	416.0	1.74
	560	E36D401HPN561MA79M	1.375 × 3.125	A79	289.0	2.24
	680	E36D401HPN681MA92M	1.375 × 3.625	A92	238.0	2.65
	820	E36D401HPN821MAA5M	1.375 × 4.125	AA5	197.0	3.09
	1,000	E36D401HPN102MAB7M	1.375 × 4.625	AB7	162.0	3.49
	1,200	E36D401HPN122MAE3M	1.375 × 5.625	AE3	135.0	4.20
	390	E36D401HPN391MC48M	2.000 × 1.875	C48	416.0	1.88
	560	E36D401HPN561MC54M	2.000 × 2.125	C54	295.0	2.36
	820	E36D401HPN821MC67M	2.000 × 2.625	C67	200.0	3.04
	1,200	E36D401HPN122MC79M	2.000 × 3.125	C79	137.0	3.94
	1,500	E36D401HPN152MC92M	2.000 × 3.625	C92	109.0	4.71
	1,800	E36D401HPN182MCA5M	2.000 × 4.125	CA5	91.5	5.47
	2,200	E36D401HPN222MCB7M	2.000 × 4.625	CB7	75.0	6.34
	2,700	E36D401HPN272MCE3M	2.000 × 5.625	CE3	61.3	7.70
	1,800	E36D401HPN182MD79M	2.500 × 3.125	D79	93.5	5.50
	2,700	E36D401HPN272MDA5M	2.500 × 4.125	DA5	62.6	7.60
	3,900	E36D401HPN392MDB7M	2.500 × 4.625	DB7	44.2	9.58
	4,700	E36D401HPN472MDE3M	2.500 × 5.625	DE3	37.0	11.50
	3,900	E36D401HPN392ME92M	3.000 × 3.625	E92	46.5	9.54
	4,700	E36D401HPN472MEA5M	3.000 × 4.125	EA5	38.8	11.06
	5,600	E36D401HPN562MED0M	3.000 × 5.125	ED0	32.3	13.24
	6,800	E36D401HPN682MEE3M	3.000 × 5.625	EE3	27.1	15.21
	10,000	E36D401HPN103MEN0M	3.000 × 8.625	EN0	18.7	22.36
	5,600	E36D401LLN562MFA5M	3.500 × 4.125	FA5	37.0	10.59
	6,800	E36D401LLN682MFB7M	3.500 × 4.625	FB7	31.0	12.02
	8,200	E36D401LLN822MFD0M	3.500 × 5.125	FD0	26.0	13.82
450 Volts 500 Volts Surge	150	E36D451HPN151MA41M	1.375 × 1.625	A41	1,687.8	0.96
	270	E36D451HPN271MA54M	1.375 × 2.125	A54	923.3	1.39
	330	E36D451HPN331MA67M	1.375 × 2.625	A67	749.9	1.60
	470	E36D451HPN471MA79M	1.375 × 3.125	A79	525.5	2.05
	560	E36D451HPN561MA92M	1.375 × 3.625	A92	440.3	2.40
	680	E36D451HPN681MAA5M	1.375 × 4.125	AA5	362.5	2.81
	820	E36D451HPN821MAB7M	1.375 × 4.625	AB7	300.7	3.16
	1,000	E36D451HPN102MAE3M	1.375 × 5.625	AE3	246.6	3.83
	330	E36D451HPN331MC48M	2.000 × 1.875	C48	653.4	1.73
	470	E36D451HPN471MC54M	2.000 × 2.125	C54	535.9	2.16
	680	E36D451HPN681MC67M	2.000 × 2.625	C67	366.8	2.76
	1,000	E36D451HPN102MC79M	2.000 × 3.125	C79	249.0	3.60
	1,200	E36D451HPN122MC92M	2.000 × 3.625	C92	207.1	4.21
	1,500	E36D451HPN152MCA5M	2.000 × 4.125	CA5	165.8	4.99
	1,800	E36D451HPN182MCB7M	2.000 × 4.625	CB7	138.3	5.74
	2,200	E36D451HPN222MCE3M	2.000 × 5.625	CE3	113.2	6.95
	1,500	E36D451HPN152MD79M	2.500 × 3.125	D79	168.2	5.02
	2,200	E36D451HPN222MDA5M	2.500 × 4.125	DA5	114.5	6.86
	2,700	E36D451HPN272MDB7M	2.500 × 4.625	DB7	93.7	7.97
	3,300	E36D451HPN332MDD0M	2.500 × 5.125	DD0	77.1	9.23
	3,900	E36D451HPN392MDE3M	2.500 × 5.625	DE3	65.6	10.47
	2,700	E36D451HPN272ME92M	3.000 × 3.625	E92	95.6	7.93
	3,900	E36D451HPN392MEA5M	3.000 × 4.125	EA5	78.4	10.08
	4,700	E36D451HPN472MED0M	3.000 × 5.125	ED0	55.7	12.13
	5,600	E36D451HPN562MEE3M	3.000 × 5.625	EE3	47.2	13.80
	8,200	E36D451HPN822MEN0M	3.000 × 8.625	EN0	32.4	20.25
	4,700	E36D451LLN472MFA5M	3.500 × 4.125	FA5	67.0	7.87
	5,600	E36D451LLN562MFB7M	3.500 × 4.625	FB7	56.0	8.94
	6,800	E36D451LLN682MFD0M	3.500 × 5.125	FD0	47.0	10.28

†For terminal, mounting and construction options, refer to the part numbering system for descriptions and codes.
*** Refer to diagram of dimensions for detailed case size specifications.**

Standard Voltage Ratings - Screw Terminals

查询"E36D101HPN822MC67M"供应商

Rated Voltage (WVDC)	Capacitance (µF)	Global Part Number†	Nominal Case Size* D×L (inches)	Case Size Code	Maximum ESR (mΩ) at +25°C, 120Hz	Rated Ripple Current (A rms) at +85°C, 120Hz
500 Volts 550 Volts Surge	100	E36D501HPN101MA41M	1.375 × 1.625	A41	3,918.0	0.60
	180	E36D501HPN181MA54M	1.375 × 2.125	A54	2,141.0	0.87
	220	E36D501HPN221MA67M	1.375 × 2.625	A67	1,739.0	1.00
	330	E36D501HPN331MA79M	1.375 × 3.125	A79	1,155.0	1.32
	390	E36D501HPN391MA92M	1.375 × 3.625	A92	975.0	1.54
	470	E36D501HPN471MAA5M	1.375 × 4.125	AA5	808.0	1.79
	560	E36D501HPN561MAB7M	1.375 × 4.625	AB7	677.0	2.00
	680	E36D501HPN681MAE3M	1.375 × 5.625	AE3	557.0	2.42
	220	E36D501HPN221MC48M	2.000 × 1.875	C48	1,453.0	1.08
	330	E36D501HPN331MC54M	2.000 × 2.125	C54	1,177.0	1.39
	470	E36D501HPN471MC67M	2.000 × 2.625	C67	817.0	1.76
	680	E36D501HPN681MC79M	2.000 × 3.125	C79	563.0	2.27
	820	E36D501HPN821MC92M	2.000 × 3.625	C92	465.0	2.67
	1,000	E36D501HPN102MCA5M	2.000 × 4.125	CA5	381.0	3.12
	1,200	E36D501HPN122MCB7M	2.000 × 4.625	CB7	317.0	3.59
	1,500	E36D501HPN152MCE3M	2.000 × 5.625	CE3	253.0	4.40
	1,000	E36D501HPN102MD79M	2.500 × 3.125	D79	320.0	3.14
	1,500	E36D501HPN152MDA5M	2.500 × 4.125	DA5	213.0	4.35
	2,200	E36D501HPN222MDB7M	2.500 × 4.625	DB7	212.0	5.52
	2,200	E36D501HPN222ME92M	3.000 × 3.625	E92	175.0	5.49
	2,700	E36D501HPN272MEB7M	3.000 × 4.625	EB7	142.0	6.74
	3,900	E36D501HPN392MEE3M	3.000 × 5.625	EE3	99.0	8.83
	5,600	E36D501HPN562MEN0M	3.000 × 8.625	EN0	69.0	12.83
	3,900	E36D501LLN392MFA5M	3.500 × 4.125	FA5	131.0	5.63
	4,700	E36D501LLN472MFB7M	3.500 × 4.625	FB7	109.0	6.62
	5,600	E36D501LLN562MFD0M	3.500 × 5.125	FD0	92.0	7.35
	6,800	E36D501LLN682MFE3M	3.500 × 5.625	FE3	76.0	8.35
550 Volts 600 Volts Surge	68	E36D551HPN680MA41M	1.375 × 1.625	A41	3,997.0	0.50
	120	E36D551HPN121MA54M	1.375 × 2.125	A54	2,227.0	0.71
	150	E36D551HPN151MA67M	1.375 × 2.625	A67	1,769.0	0.83
	220	E36D551HPN221MA79M	1.375 × 3.125	A79	1,202.0	1.08
	270	E36D551HPN271MA92M	1.375 × 3.625	A92	977.0	1.28
	330	E36D551HPN331MAB7M	1.375 × 4.625	AB7	797.0	1.54
	390	E36D551HPN391MAD0M	1.375 × 5.125	AD0	674.0	1.75
	470	E36D551HPN471MAE3M	1.375 × 5.625	AE3	559.0	2.01
	220	E36D551HPN221MC54M	2.000 × 2.125	C54	1,224.0	1.13
	330	E36D551HPN331MC67M	2.000 × 2.625	C67	808.0	1.48
	470	E36D551HPN471MC79M	2.000 × 3.125	C79	565.0	1.89
	560	E36D551HPN561MC92M	2.000 × 3.625	C92	472.0	2.21
	680	E36D551HPN681MCA5M	2.000 × 4.125	CA5	388.0	2.58
	820	E36D551HPN821MCB7M	2.000 × 4.625	CB7	322.0	2.97
	1,000	E36D551HPN102MCE3M	2.000 × 5.625	CE3	263.0	3.59
	680	E36D551HPN681MD79M	2.500 × 3.125	D79	391.0	2.59
	1,000	E36D551HPN102MDA5M	2.500 × 4.125	DA5	265.0	3.89
	1,200	E36D551HPN122MDB7M	2.500 × 4.625	DB7	220.0	4.56
	1,500	E36D551HPN152MDE3M	2.500 × 5.625	DE3	176.0	5.46
	1,200	E36D551HPN122ME92M	3.000 × 3.625	E92	222.0	4.06
	1,500	E36D551HPN152MEA5M	3.000 × 4.125	EA5	178.0	4.79
	1,800	E36D551HPN182MEB7M	3.000 × 4.625	EB7	148.0	5.50
	2,200	E36D551HPN222MED0M	3.000 × 5.125	ED0	121.0	6.36
	3,900	E36D551HPN392MEN0M	3.000 × 8.625	EN0	69.0	10.71
	1,800	E36D551LLN182MFA5M	3.500 × 4.125	FA5	159.0	5.11
	2,200	E36D551LLN222MFB7M	3.500 × 4.625	FB7	130.0	6.06
	2,700	E36D551LLN272MFD0M	3.500 × 5.125	FD0	107.0	6.81
	3,300	E36D551LLN332MFE3M	3.500 × 5.625	FE3	88.0	7.76

†For terminal, mounting and construction options, refer to the part numbering system for descriptions and codes.
*** Refer to diagram of dimensions for detailed case size specifications.**