# NOTICE OF REVISION (NOR)

THIS REVISION DESCRIBED BELOW HAS BEEN AUTHORIZED FOR THE DOCUMENT LISTED.

查询"5962-8766301B2A"供应商

1. DATE (YYMMDD) 95-09-13

Form Approved OMB No. 0704-0188

Public reporting burden for this collection is estimated to average 2 hours per response, including the time for reviewing instructions, searching existing data sources, gathering and maintaining the data needed, and completing and reviewing the collection of information. Send comments regarding this burden estimate or any other aspect of this collection of information, including suggestions for reducing this burden, to Department of Defense, Washington Headquarters Services, Directorate for Information Operations and Reports, 1215 Jefferson Davis Highway, Suite 1204, Arlington, VA 22202-4302, and to the Office of Management and Budget, Paperwork Reduction Project (0704-0188), Washington, DC 20503.
PLEASE DO NOT RETURN YOUR COMPLETED FORM TO EITHER OF THESE ADDRESSED. RETURN COMPLETED FORM TO THE GOVERNMENT ISSUING CONTRACTING OFFICER FOR THE CONTRACT/ PROCURING ACTIVITY NUMBER LISTED IN ITEM 2 OF THIS FORM.

2. PROCURING ACTIVITY NO.

3. DODAAC

4. ORIGINATOR

a. TYPED NAME *(First, Middle Initial, Last)*

b. ADDRESS *(Street, City, State, Zip Code)*
Defense Electronics Supply Center
1507 Wilmington Pike
Dayton, OH 45444-5765

5. CAGE CODE 67268

6. NOR NO. 5962-R196-95

7. CAGE CODE 67268

8. DOCUMENT NO. **5962-87663**

9. TITLE OF DOCUMENT
MICROCIRCUIT, DIGITAL, ADVANCED CMOS, OCTAL TRANSCEIVER WITH THREE-STATE OUTPUTS, TTL COMPATIBLE INPUTS, MONOLITHIC SILICON

10. REVISION LETTER
a. CURRENT B
b. NEW C

11. ECP NO. N/A

12. CONFIGURATION ITEM (OR SYSTEM) TO WHICH ECP APPLIES
All

13. DESCRIPTION OF REVISION

Sheet 1: Revisions ltr column; add "C".
Revisions description column; add "Changes in accordance with NOR 5962-R196-95".
Revisions date column; add "95-09-13".
Title of document block; delete and replace as shown in item 9 of this NOR.
Revision level block; change from "B" to "C".
Rev status of sheets; for sheet 1, change from "B" to "C". For sheet 14 change from "A" to "C".

Sheet 14: Table I, footnote 2/,last paragraph, first sentence; change from "Additional detailed information on qualified devices (i.e., pin for pin conditions and testing sequence) is available from the qualifying activity (DESC-EQM) upon request." to "Additional detailed information on qualified class B and S devices (i.e., pin for pin conditions and testing sequence) is available from the qualifying activity (DESC-EQM) upon request."
Revision level block; add "C".

14. THIS SECTION FOR GOVERNMENT USE ONLY

| a. *(X one)* | | |
|---|---|---|
| | X | (1) Existing document supplemented by the NOR may be used in manufacture. |
| | | (2) Revised document must be received before manufacturer may incorporate this change. |
| | | (3) Custodian of master document shall make above revision and furnish revised document. |

b. ACTIVITY AUTHORIZED TO APPROVE CHANGE FOR GOVERNMENT
DESC-ELDC

c. TYPED NAME *(First, Middle Initial, Last)*
Monica L. Poelking

d. TITLE
Chief, Custom Microelectronics

e. SIGNATURE
Monica L. Poelking

f. DATE SIGNED *(YYMMDD)* 95-09-13

15a. ACTIVITY ACCOMPLISHING REVISION
DESC-ELDC

b. REVISION COMPLETED *(Signature)*
Joseph A. Kerby

c. DATE SIGNED *(YYMMDD)* 95-09-13

查询"5962-8766301B2A"供应商

# NOTICE OF REVISION (NOR)

(See MIL-STD-480 for instructions)

This revision described below has been authorized for the document listed.

| DATE (YYMMDD) | Form Approved OMB No. 0704-0188 |
|---|---|
| 92-12-29 | |

Public reporting burden for this collection is estimated to average 1 hour per response, including the time for reviewing instructions, searching existing data sources, gathering and maintaining the data needed, and completing and reviewing the collection of information. Send comments regarding this burden estimate or any other aspect of this collection of information, including suggestions for reducing this burden, to Washington Headquarters Services, Directorate for Information Operations and Reports, 1215 Jefferson Davis Highway, Suite 1204, Arlington, VA 22202-4302, and to the Office of Information and Regulatory Affairs, Office of Management and Budget, Washington, DC 20503.

| 1. ORIGINATOR NAME AND ADDRESS | 2. CAGE CODE | 3. NOR NO. |
|---|---|---|
| Defense Electronics Supply Center<br>Dayton, Ohio 45444-5270 | 67268 | 5962-R042-93 |
| | 4. CAGE CODE<br>67268 | 5. DOCUMENT NO.<br>5962-87663 |
| 6. TITLE OF DOCUMENT<br>MICROCIRCUIT, DIGITAL, ADVANCED CMOS OCTAL TRANSCEIVER WITH THREE STATE OUTPUTS, MONOLITHIC SILICON | 7. REVISION LETTER<br>(Current) A | (New) B |
| | 8. ECP NO.<br>None | |

9. CONFIGURATION ITEM (OR SYSTEM) TO WHICH ECP APPLIES

10. DESCRIPTION OF REVISION

Sheet 1: Revisions ltr column; add "B"
Revisions description column; add "Changes in accordance with NOR 5962-R042-93".
Revisions date column; add "92-12-29".
Revision level block change from: "A" to: "B".
Rev status of sheets; for sheets 1, 10, 20, 25, and 26 change from: "A" to" B".

Sheet 10: Power dissipation capacitance test, device type 01, all device classes, max limits column, change from "65" to "85".
Revision level block; change from: "A" to: "B".

Sheet 20: Paragraph 4.2.1a.5c, change from: "$V_{CC}$ = 5.5 V ±0.5 V." to "$V_{CC}$ = 5.5 V +0.5 V, -0.00 V.".
Paragraph 4.2.1a.6c, change from: "$V_{CC}$ = 5.5 V ±0.5 V." to "$V_{CC}$ = 5.5 V +0.5 V, -0.00 V.".
Revision level block; change from: "A" to: "B".

(Continued on sheet 2.)

11. THIS SECTION FOR GOVERNMENT USE ONLY

a. CHECK ONE

[X ] EXISTING DOCUMENT SUPPLEMENTED BY THIS NOR MAY BE USED IN MANUFACTURE.

[ ] REVISED DOCUMENT MUST BE RECEIVED BEFORE MANUFACTURER MAY INCORPORATE THIS CHANGE.

[ ] CUSTODIAN OF MASTER DOCUMENT SHALL MAKE ABOVE REVISION AND FURNISH REVISED DOCUMENT TO:

| b. ACTIVITY AUTHORIZED TO APPROVE CHANGE FOR GOVERNMENT | SIGNATURE AND TITLE | DATE (YYMMDD) |
|---|---|---|
| DESC-ECC | Monica Poelking<br>Chief, Custom Microelectronics | 92-12-29 |
| 12. ACTIVITY ACCOMPLISHING REVISION | REVISION COMPLETED (Signature) | DATE (YYMMDD) |
| DESC-ECC | Thomas Ricciuti | 92-12-29 |

10. DESCRIPTION OF REVISION - CONTINUED

查询"5962-8766301B2A"供应商

Sheets 25 and 26: Revision level block; change from: "A" to: "B".
Paragraph 4.4.5, delete and substitute as follows:

" 4.4.5 Group E inspection. Group E inspection is required only for parts intended to be marked as radiation hardness assured (see 3.5 herein). RHA levels for device classes B and S shall be M, D, R, and H. RHA quality conformance inspection sample tests shall be performed at the RHA level specified in the acquisition document.

a. End-point electrical parameters shall be as specified in table II herein.

b. For device classes B and S, subgroups 1 and 2 in table V, method 5005 of MIL-STD-883 shall be tested as appropriate for device construction.

c. When specified in the purchase order or contract, a copy of the RHA delta limits shall be supplied.

d. RHA tests for device classes B and S for levels M, D, R, and H shall be performed through each level to determine at what levels the devices meet the RHA requirements. These RHA tests shall be performed for initial qualification and after design or process changes which may affect the RHA performance of the device.

e. Prior to irradiation, each selected sample shall be assembled in its qualified package. It shall pass the specified group A electrical parameters in table I for subgroups specified in table II herein.

f. For device classes B and S, the devices shall be subjected to radiation hardness assured tests as specified in MIL-M-38510 for the RHA level being tested. All device classes must meet the postirradiation end-point electrical parameter limits as defined in table I at $T_A$ = +25°C ±5°C, after exposure, to the subgroups specified in table II herein.

4.4.5.1 Total dose irradiation testing. Total dose irradiation testing shall be performed in accordance with MIL-STD-883, method 1019, and as specified herein. Prior to and during total dose irradiation characterization and testing, the devices for characterization shall be biased so that 50 percent are at inputs high and 50 percent are at inputs low, and the devices for testing shall be biased to the worst case condition established during characterization. Devices shall be biased as follows:

a. Inputs tested high, $V_{CC}$ = 5.5 V dc +5%, $R_{CC}$ = 10Ω +20%, $V_{IN}$ = 5.0 V dc +5%, $R_{IN}$ = 1 kΩ +20%, and all outputs are open.

b. Inputs tested low, $V_{CC}$ = 5.5 V dc +5%, $R_{CC}$ = 10Ω +20%, $V_{IN}$ = 0.0 V dc, $R_{IN}$ = 1 kΩ +20%, and all outputs are open.

4.4.5.1.1 Accelerated aging test. Accelerated aging shall be performed on class B and S devices requiring an RHA level greater than 5K rads (Si). The post-anneal end point electrical parameter limits shall be as specified in table I herein and shall be the preirradiation end point electrical parameter limit at 25°C ±5°C. Testing shall be performed at initial qualification and after any design or process changes which may effect the RHA response of the device."

查询"5962-8766301B2A"供应商

REVISIONS

| LTR | DESCRIPTION | DATE (YR-MO-DA) | APPROVED |
|---|---|---|---|
| A | Add device type 02. Add vendor cage 01295. Change to one part one part number format. Add ground bounce and latch-up immunity tests. Add 10.1 substitution statement. Changes to table I. Editorial correction throughout. | 92-07-09 | |

| REV | | | | | | | | | | | | | | | | | | | |
|---|---|---|---|---|---|---|---|---|---|---|---|---|---|---|---|---|---|---|---|
| SHEET | | | | | | | | | | | | | | | | | | | |
| REV | A | A | A | A | A | A | A | A | A | A | A | A | A | A | | | | | |
| SHEET | 15 | 16 | 17 | 18 | 19 | 20 | 21 | 22 | 23 | 24 | 25 | 26 | 27 | 28 | | | | | |

| REV STATUS OF SHEETS | REV | A | A | A | A | A | A | A | A | A | A | A | A | A |
|---|---|---|---|---|---|---|---|---|---|---|---|---|---|---|
| | SHEET | 1 | 2 | 3 | 4 | 5 | 6 | 7 | 8 | 9 | 10 | 11 | 12 | 13 | 14 |

PMIC N/A

**STANDARDIZED MILITARY DRAWING**

THIS DRAWING IS AVAILABLE FOR USE BY ALL DEPARTMENTS AND AGENCIES OF THE DEPARTMENT OF DEFENSE

SC N/A

PREPARED BY
Greg Pitz

CHECKED BY
D A DiCenzo

APPROVED BY
N A Hauck

DRAWING APPROVAL DATE
87-08-06

REVISION LEVEL
A

**DEFENSE ELECTRONICS SUPPLY CENTER**
**DAYTON, OHIO 45444**

MICROCIRCUIT, DIGITAL, ADVANCED CMOS OCTAL TRANSCEIVER WITH THREE STATE OUTPUTS, MONOLITHIC SILICON

| SIZE | CAGE CODE | |
|---|---|---|
| A | 67268 | 5962-87663 |

SHEET 1 OF 28



DISTRIBUTION STATEMENT A. Approved for public release; distribution is unlimited.

查询"5962-8766301B2A"供应商

1. SCOPE

1.1 Scope. This drawing forms a part of a one part - one part number documentation system (see 6.6 herein). Two product assurance classes consisting of military high reliability (device classes B, Q, and M) and space application (device classes S and V), and a choice of case outlines and lead finishes are available and are reflected in the Part or Identifying Number (PIN). Device class M microcircuits represent non-JAN class B microcircuits in accordance with 1.2.1 of MIL-STD-883, "Provisions for the use of MIL-STD-883 in conjunction with compliant non-JAN devices". When available, a choice of radiation hardness assurance (RHA) levels are reflected in the PIN.

1.2 PIN. The PIN shall be as shown in the following example:

| 5962 | - | 87663 | 01 | M | R | X |
|---|---|---|---|---|---|---|
| Federal stock class designator | RHA designator (See 1.2.1) | | Device type (See 1.2.2) | Device class designator (See 1.2.3) | Case outline (See 1.2.4) | Lead finish (See 1.2.5) |

Drawing number

1.2.1 Radiation hardness assurance (RHA) designator. Device classes M, B, and S RHA marked devices shall meet the MIL-M-38510 specified RHA levels and shall be marked with the appropriate RHA designator. Device classes Q and V RHA marked devices shall meet the MIL-I-38535 specified RHA levels and shall be marked with the appropriate RHA designator. A dash (-) indicates a non-RHA device.

1.2.2 Device type(s). The device type(s) shall identify the circuit function as follows:

| Device type | Generic number | Circuit function |
|---|---|---|
| 01 | 54ACT245 | Octal bidirectional transceiver with three-state outputs, TTL compatible inputs. |
| 02 | 54ACT11245 | Octal bidirectional transceiver with three-state outputs, TTL compatible inputs. |

1.2.3 Device class designator. The device class designator shall be a single letter identifying the product assurance level as follows:

| Device class | Device requirements documentation |
|---|---|
| M | Vendor self-certification to the requirements for non-JAN class B microcircuits in accordance with 1.2.1 of MIL-STD-883 |
| B or S | Certification and qualification to MIL-M-38510 |
| Q or V | Certification and qualification to MIL-I-38535 |

1.2.4 Case outline(s). The case outline(s) shall be as designated in MIL-STD-1835, and as follows:

| Outline letter | Descriptive designator | Terminals | Package style |
|---|---|---|---|
| R | GDIP1-T20 or CDIP2-T20 | 20 | dual-in-line |
| S | GDFP2-F20 or CDFP3-F20 | 20 | flat package |
| L | GDIP3-T24 or CDIP4-T24 | 24 | dual-in-line |
| 2 | CQCC1-N20 or CQCC2-N20 | 20 | leadless-chip-carrier package |
| 3 | CQCC1-N28 or CQCC2-N28 | 28 | leadless-chip-carrier package |

1.2.5 Lead finish. The lead finish shall be as specified in MIL-M-38510 for classes M, B, and S or MIL-I-38535 for classes Q and V. Finish letter "X" shall not be marked on the microcircuit or its packaging. The "X" designation is for use in specifications when lead finishes A, B, and C are considered acceptable and interchangeable without preference.

查询"5962-8766301B2A"供应商

1.3 Absolute maximum ratings. 1/ 2/

| | |
|---|---|
| Supply voltage range ($V_{CC}$) | -0.5 V dc to +6.0 V dc |
| DC input voltage range ($V_{IN}$) | -0.5 V dc to $V_{CC}$ + 0.5 V dc |
| DC output voltage range ($V_{OUT}$) | -0.5 V dc to $V_{CC}$ + 0.5 V dc |
| Clamp diode current ($I_{IK}$, $I_{OK}$) | ±20 mA |
| DC output current ($I_{OUT}$) | ±50 mA |
| DC $V_{CC}$ or GND current ($I_{CC}$, $I_{GND}$) | ±200 mA 3/ |
| Storage temperature range ($T_{STG}$) | -65°C to +150°C |
| Maximum power dissipation ($P_D$) | 500 mW |
| Lead temperature (soldering, 10 seconds) | +300°C |
| Thermal resistance, junction-to-case ($\theta_{JC}$) | See MIL-STD-1835 |
| Junction temperature ($T_J$) | +175°C |
| Case operating temperature ($T_C$) | -55°C to +125°C |

1.4 Recommended operating conditions. 1/ 2/ 4/

| | |
|---|---|
| Supply voltage range ($V_{CC}$) | +4.5 V dc to +5.5 V dc |
| Input voltage range ($V_{IN}$) | +0.0 V dc to $V_{CC}$ |
| Output voltage range ($V_{OUT}$) | +0.0 V dc to $V_{CC}$ |
| Maximum low level input voltage ($V_{IL}$) | 0.8 V at $V_{CC}$ = 4.5 V<br>0.8 V at $V_{CC}$ = 5.5 V |
| Minimum high level input voltage ($V_{IH}$) | 2.0 V at $V_{CC}$ = 4.5 V<br>2.0 V at $V_{CC}$ = 5.5 V |
| Case operating temperature range ($T_C$) | -55°C to +125°C |
| Input rise and fall rate ($t_r$, $t_f$) maximum: | |
| $V_{CC}$ = 4.5 V | 10 ns/V |
| $V_{CC}$ = 5.5 V | 8 ns/V |
| Maximum high level output current ($I_{OH}$) | -24 mA |
| Maximum low level output current ($I_{OL}$) | 24 mA |

1.5 Digital logic testing for device classes Q and V.

| | |
|---|---|
| Fault coverage measurement of manufacturing logic tests (MIL-STD-883, test method 5012) | XX percent 5/ |

1/ Stresses above the absolute maximum rating may cause permanent damage to the device. Extended operation at the maximum levels may degrade performance and affect reliability. The maximum junction temperature may be exceeded for allowable short duration burn-in screening conditions in accordance with method 5004 of MIL-STD-883.

2/ Unless otherwise noted, all voltages are referenced to GND.

3/ For packages with multiple $V_{CC}$ and GND pins, this value represents the maximum total current flowing into or out of all $V_{CC}$ or GND pins.

4/ Unless otherwise specified the values listed above shall apply over the full $V_{CC}$ and $T_C$ recommended operating range.

5/ Values will be added when they become available from the qualified source.

查询"5962-8766301B2A"供应商

## 2. APPLICABLE DOCUMENTS

2.1 Government specifications, standards, bulletin, and handbook. Unless otherwise specified, the following specifications, standards, bulletin, and handbook of the issue listed in that issue of the Department of Defense Index of Specifications and Standards specified in the solicitation, form a part of this drawing to the extent specified herein.

SPECIFICATIONS

MILITARY

MIL-M-38510 - Microcircuits, General Specification for.
MIL-I-38535 - Integrated Circuits, Manufacturing, General Specification for.

STANDARDS

MILITARY

MIL-STD-480 - Configuration Control-Engineering Changes, Deviations and Waivers.
MIL-STD-883 - Test Methods and Procedures for Microelectronics.
MIL-STD-1835 - Microcircuit Case Outlines

BULLETIN

MILITARY

MIL-BUL-103 - List of Standardized Military Drawings (SMD's).

HANDBOOK

MILITARY

MIL-HDBK-780 - Standardized Military Drawings.

(Copies of the specifications, standards, bulletin, and handbook required by manufacturers in connection with specific acquisition functions should be obtained from the contracting activity or as directed by the contracting activity.)

2.2 Non-Government publications. The following document(s) form a part of this document to the extent specified herein. Unless otherwise specified, the issues of the documents which are DOD adopted are those listed in the issue of the DODISS cited in the solicitation. Unless otherwise specified, the issues of documents not listed in the DODISS are the issues of the documents cited in the solicitation.

ELECTRONIC INDUSTRIES ASSOCIATION (EIA)

JEDEC Standard No. 17 - A Standardized Test Procedure for the Characterization of the LATCH-UP in CMOS Integrated Circuits.

JEDEC Standard No. 20 - Standardized for Description of 54/74ACXXXX and 54/74ACTXXXX Advanced High-Speed CMOS Devices.

(Applications for copies should be addressed to the Electronics Industries Association, 2001 Eye Street, NW, Washington, DC 20006.)

(Non-Government standards and other publications are normally available from the organizations that prepare or distribute the documents. These documents may also be available in or through libraries or other informational services.)

2.3 Order of precedence. In the event of a conflict between the text of this drawing and the references cited herein, the text of this drawing shall take precedence.

查询"5962-8766301B2A"供应商

3. REQUIREMENTS

3.1 Item requirements. The individual item requirements for device class M shall be in accordance with 1.2.1 of MIL-STD-883, "Provisions for the use of MIL-STD-883 in conjunction with compliant non-JAN devices" and as specified herein. The individual item requirements for device classes B and S shall be in accordance with MIL-M-38510 and as specified herein. This is a fully characterized military detail specification and is suitable for qualification of device classes B and S to the requirements of MIL-M-38510. The individual item requirements for device classes Q and V shall be in accordance with MIL-I-38535, the device manufacturer's Quality Management (QM) plan, and as specified herein.

3.2 Design, construction, and physical dimensions. The design, construction, and physical dimensions shall be as specified in MIL-M-38510 for device classes M, B, and S and MIL-I-38535 for device classes Q and V and herein.

3.2.1 Case outline. The case outline shall be in accordance with 1.2.4 herein.

3.2.2 Terminal connections. The terminal connections shall be as specified on figure 1.

3.2.3 Truth table. The truth table shall be as specified on figure 2.

3.2.4 Logic diagram. The logic diagram shall be as specified on figure 3.

3.2.5 Ground bounce waveforms and test circuit. The ground bounce waveforms and test circuit shall be as specified on figure 4.

3.2.6 Switching waveforms and test circuit. The switching waveforms and test circuit shall be as specified on figure 5.

3.2.7 Schematic circuits. The schematic circuits shall be submitted to the preparing activity prior to the inclusion of a manufacturer's device in this drawing and shall be submitted to the qualifying activity as a prerequisite for qualification for device classes B and S. All qualified manufacturer's schematics shall be maintained and available upon request.

3.3 Electrical performance characteristics and postirradiation parameter limits. Unless otherwise specified herein, the electrical performance characteristics and postirradiation parameter limits are as specified in table I and shall apply over the full case operating temperature range. Test conditions for these specified characteristics and limits are as specified in table I. For device classes B and S, a pin-for-pin conditions and testing sequence for table I parameters shall be maintained and available upon request from the qualifying activity, on qualified devices.

3.4 Electrical test requirements. The electrical test requirements shall be the subgroups specified in table IIA. The electrical tests for each subgroup are defined in table I. Radiation hardness assurance level designators M, D, and R (see MIL-M-38510) in table I are post-irradiation end-point electrical parameters.

3.5 Marking. The part shall be marked with the PIN listed in 1.2 herein. Marking for device class M shall be in accordance with MIL-STD-883 (see 3.1 herein). In addition, the manufacturer's PIN may also be marked as listed in MIL-BUL-103. Marking for device classes B and S shall be in accordance with MIL-M-38510. Marking for device classes Q and V shall be in accordance with MIL-I-38535.

3.5.1 Certification/compliance mark. The compliance mark for device class M shall be a "C" as required in MIL-STD-883 (see 3.1 herein). The certification mark for device classes B and S shall be a "J" or "JAN" as required in MIL-M-38510. The certification mark for device classes Q and V shall be a "QML" as required in MIL-I-38535.

3.5.2 Correctness of indexing and marking for device classes B and S. For device classes B and S, all devices shall be subjected to the final electrical tests specified in table IIA after PIN marking (marked in accordance with MIL-M-38510) to verify that they are correctly indexed and identified by PIN. Optionally, an approved electrical test may be devised especially for this requirement.

查询"5962-8766301B2A"供应商

3.6 Certificate of compliance. For device class M, a certificate of compliance shall be required from a manufacturer in order to be listed as an approved source of supply in MIL-BUL-103 (see 6.7.3 herein). For device classes Q and V, a certificate of compliance shall be required from a QML-38535 listed manufacturer in order to supply to the requirements of this drawing (see 6.7.2 herein). The certificate of compliance submitted to DESC-ECC prior to listing as an approved source of supply for this drawing shall affirm that the manufacturer's product meets, for device class M the requirements of MIL-STD-883 (see 3.1 herein), or for device classes Q and V, the requirements of MIL-I-38535 and the requirements herein.

3.7 Certificate of conformance. A certificate of conformance as required for device class M in MIL-STD-883 (see 3.1 herein) or device classes B and S in MIL-M-38510 or for device classes Q and V in MIL-I-38535 shall be provided with each lot of microcircuits delivered to this drawing.

3.8 Notification of change for device class M. For device class M, notification to DESC-ECC of change of product (see 6.2 herein) involving devices acquired to this drawing is required for any change as defined in MIL-STD-480.

3.9 Verification and review for device class M. For device class M, DESC, DESC's agent, and the acquiring activity retain the option to review the manufacturer's facility and applicable required documentation. Offshore documentation shall be made available onshore at the option of the reviewer.

3.10 Microcircuit group assignment for device classes M, B, and S. Device classes M, B, and S devices covered by this drawing shall be in microcircuit group number 37 (see MIL-M-38510, appendix E).

3.11 Serialization for device class S. All device class S devices shall be serialized in accordance with MIL-M-38510.

3.12 Substitution. Substitution data shall be as indicated in the appendix herein.

查询"5962-8766301B2A"供应商

TABLE I. Electrical performance characteristics.

| Test and MIL-STD-883 test method 1/ | Symbol | Test conditions unless otherwise specified 2/ $-55°C \le T_C \le +125°C$ $4.5\ V \le V_{CC} \le 5.5\ V$ | | Device type 3/ and device class | $V_{CC}$ | Group A subgroups | Limits 2/ Min | Limits 2/ Max | Unit |
|---|---|---|---|---|---|---|---|---|---|
| High level output voltage 3006 | $V_{OH1}$ 4/ | For all inputs affecting output under test $V_{IN} = V_{IH}$ or $V_{IL}$ $V_{IH} = 2.0\ V$ $V_{IL} = 0.8\ V$ For all other inputs $V_{IN} = V_{CC}$ or GND $I_{OH} = -50\ \mu A$ | | All All | 4.5 V | 1,2,3 | 4.4 | | V |
| | $V_{OH2}$ 5/ 6/ | For all inputs affecting output under test $V_{IN} = V_{IH}$ or $V_{IL}$ $V_{IH} = 2.0\ V$ $V_{IL} = 0.8\ V$ For all other inputs $V_{IN} = V_{CC}$ or GND $I_{OH} = -50\ \mu A$ | | All All | 5.5 V | 1,2,3 | 5.4 | | |
| | | | M | | | | 5.4 | | |
| | | | D | 01 | | 1 | 5.4 | | |
| | | | R | B,S,Q,V | | | 5.4 | | |
| | $V_{OH3}$ 5/ 6/ | For all inputs affecting output under test $V_{IN} = V_{IH}$ or $V_{IL}$ $V_{IH} = 2.0\ V$ $V_{IL} = 0.8\ V$ For all other inputs $V_{IN} = V_{CC}$ or GND $I_{OH} = -24\ mA$ | | All All | 4.5 V | 1,2,3 | 3.7 | | |
| | | | M | | | | 3.7 | | |
| | | | D | 01 | | 1 | 3.7 | | |
| | | | R | B,S,Q,V | | | 3.7 | | |
| | $V_{OH4}$ 4/ | For all inputs affecting output under test $V_{IN} = V_{IH}$ or $V_{IL}$ $V_{IH} = 2.0\ V$ $V_{IL} = 0.8\ V$ For all other inputs $V_{IN} = V_{CC}$ or GND $I_{OH} = -24\ mA$ | | All All | 5.5 V | 1,2,3 | 4.7 | | |
| | $V_{OH5}$ 5/ 6/ 7/ | For all inputs affecting output under test $V_{IN} = V_{IH}$ or $V_{IL}$ $V_{IH} = 2.0\ V$ $V_{IL} = 0.8\ V$ For all other inputs $V_{IN} = V_{CC}$ or GND $I_{OH} = -50\ mA$ | | All All | 5.5 V | 1,2,3 | 3.85 | | |
| | | | M | | | | 3.85 | | |
| | | | D | 01 | | 1 | 3.85 | | |
| | | | R | B,S,Q,V | | | 3.85 | | |

See footnotes at end of table.

查询"5962-8766301B2A"供应商

TABLE I. Electrical performance characteristics - Continued.

| Test and MIL-STD-883 test method 1/ | Symbol | Test conditions unless otherwise specified 2/ $-55°C \le T_C \le +125°C$ $4.5\ V \le V_{CC} \le 5.5\ V$ | | Device type 3/ and device class | $V_{CC}$ | Group A subgroups | Limits 2/ Min | Limits 2/ Max | Unit |
|---|---|---|---|---|---|---|---|---|---|
| Low level output voltage 3007 | $V_{OL1}$ 4/ | For all inputs affecting output under test $V_{IN} = V_{IH}$ or $V_{IL}$ $V_{IH} = 2.0\ V$ $V_{IL} = 0.8\ V$ For all other inputs $V_{IN} = V_{CC}$ or GND $I_{OL} = 50\ \mu A$ | | All All | 4.5 V | 1,2,3 | | 0.1 | V |
| | $V_{OL2}$ 5/ 6/ | For all inputs affecting output under test $V_{IN} = V_{IH}$ or $V_{IL}$ $V_{IH} = 2.0\ V$ $V_{IL} = 0.8\ V$ For all other inputs $V_{IN} = V_{CC}$ or GND $I_{OL} = 50\ \mu A$ | | All All | 5.5 V | 1,2,3 | | 0.1 | |
| | | | M | | | | | 0.1 | |
| | | | D | 01 | | 1 | | 0.1 | |
| | | | R | B,S,Q,V | | | | 0.1 | |
| | $V_{OL3}$ 5/ 6/ | For all inputs affecting output under test $V_{IN} = V_{IH}$ or $V_{IL}$ $V_{IH} = 2.0\ V$ $V_{IL} = 0.8\ V$ For all other inputs $V_{IN} = V_{CC}$ or GND $I_{OL} = 24\ mA$ | | All B,S,Q,V | 4.5 V | 1,3 | | 0.4 | |
| | | | | | | 2 | | 0.5 | |
| | | | | All M | | 1 | | 0.4 | |
| | | | | | | 2,3 | | 0.5 | |
| | | | M | | | | | 0.4 | |
| | | | D | 01 | | 1 | | 0.4 | |
| | | | R | B,S,Q,V | | | | 0.4 | |
| | $V_{OL4}$ 4/ | For all inputs affecting output under test $V_{IN} = V_{IH}$ or $V_{IL}$ $V_{IH} = 2.0\ V$ $V_{IL} = 0.8\ V$ For all other inputs $V_{IN} = V_{CC}$ or GND $I_{OL} = 24\ mA$ | | All B,S,Q,V | 5.5 V | 1,3 | | 0.4 | |
| | | | | | | 2 | | 0.5 | |
| | | | | All M | | 1 | | 0.4 | |
| | | | | | | 2,3 | | 0.5 | |
| | $V_{OL5}$ 5/ 6/ 7/ | For all inputs affecting output under test $V_{IN} = V_{IH}$ or $V_{IL}$ $V_{IH} = 2.0\ V$ $V_{IL} = 0.8\ V$ For all other inputs $V_{IN} = V_{CC}$ or GND $I_{OL} = 50\ mA$ | | All All | 5.5 V | 1,2,3 | | 1.65 | |
| | | | M | | | | | 1.65 | |
| | | | D | 01 | | 1 | | 1.65 | |
| | | | R | B,S,Q,V | | | | 1.65 | |

See footnotes at end of table.

查询"5962-8766301B2A"供应商

TABLE I. Electrical performance characteristics - Continued.

| Test and MIL-STD-883 test method 1/ | Symbol | Test conditions unless otherwise specified 2/ $-55°C \le T_C \le +125°C$ $4.5\ V \le V_{CC} \le 5.5\ V$ | | Device type 3/ and device class | $V_{CC}$ | Group A subgroups | Limits 2/ Min | Limits 2/ Max | Unit |
|---|---|---|---|---|---|---|---|---|---|
| Three-state output leakage current high 3021 | $I_{OZH}$ 5/ 6/ 8/ | $\overline{OE} = V_{IH}$ or $V_{IL}$ $V_{IH} = 2.0\ V$ $V_{IL} = 0.8\ V$ For all other inputs $V_{IN} = V_{CC}$ or GND $V_{OUT} = 5.5\ V$ | | All B,S,Q,V | 5.5 V | 1 | | 0.6 | µA |
| | | | | | | 2 | | 11.0 | |
| | | | | All M | | 1 | | 0.6 | |
| | | | | | | 2,3 | | 11.0 | |
| | | | M | 01 B,S,Q,V | | 1 | | 3.0 | |
| | | | D | | | | | 10.0 | |
| | | | R | | | | | 20.0 | |
| Three-state output leakage current low 3020 | $I_{OZL}$ 5/ 6/ 8/ | $\overline{OE} = V_{IH}$ or $V_{IL}$ $V_{IH} = 2.0\ V$ $V_{IL} = 0.8\ V$ For all other inputs $V_{IN} = V_{CC}$ or GND $V_{OUT} = GND$ | | All B,S,Q,V | 5.5 V | 1 | | -0.6 | µA |
| | | | | | | 2 | | -11.0 | |
| | | | | All M | | 1 | | -0.6 | |
| | | | | | | 2,3 | | -11.0 | |
| | | | M | 01 B,S,Q,V | | 1 | | -3.0 | |
| | | | D | | | | | -10.0 | |
| | | | R | | | | | -20.0 | |
| Positive input clamp voltage 3022 | $V_{IC+}$ 5/ 6/ | $V_{CC} = GND$ For input under test $I_{IN} = 1\ mA$ | | All B,S,Q,V | | 1 | 0.4 | 1.5 | V |
| | | | M | 01 B,S,Q,V | | 1 | 0.4 | 1.5 | |
| | | | D | | | | 0.4 | 1.5 | |
| | | | R | | | | 0.4 | 1.5 | |
| Negative input clamp voltage 3022 | $V_{IC-}$ 5/ 6/ | $V_{CC}$ = Open For input under test $I_{IN} = -1\ mA$ | | All B,S,Q,V | | 1 | -0.4 | -1.5 | V |
| | | | M | 01 B,S,Q,V | | 1 | -0.4 | -1.5 | |
| | | | D | | | | -0.4 | -1.5 | |
| | | | R | | | | -0.4 | -1.5 | |
| Input current high 3010 | $I_{IH}$ 5/ 6/ 8/ | For input under test $V_{IN} = V_{CC}$ For all other inputs $V_{IN} = V_{CC}$ or GND | | All B,S,Q,V | 5.5 V | 1 | | 0.1 | µA |
| | | | | | | 2 | | 1.0 | |
| | | | | All M | | 1 | | 0.1 | |
| | | | | | | 2,3 | | 1.0 | |
| | | | M | 01 B,S,Q,V | | 1 | | 0.1 | |
| | | | D | | | | | 0.1 | |
| | | | R | | | | | 0.1 | |

See footnotes at end of table.

查询"5962-8766301B2A"供应商

TABLE I. Electrical performance characteristics - Continued.

| Test and MIL-STD-883 test method 1/ | Symbol | Test conditions unless otherwise specified 2/ -55°C ≤ $T_C$ ≤ +125°C 4.5 V ≤ $V_{CC}$ ≤ 5.5 V | | Device type 3/ and device class | $V_{CC}$ | Group A subgroups | Limits 2/ Min | Limits 2/ Max | Unit |
|---|---|---|---|---|---|---|---|---|---|
| Input current low 3009 | $I_{IL}$ 5/ 6/ 8/ | For input under test $V_{IN}$ = GND For all other inputs $V_{IN}$ = $V_{CC}$ or GND | | All B,S,Q,V | 5.5 V | 1 | | -0.1 | µA |
| | | | | | | 2 | | -1.0 | |
| | | | | All M | | 1 | | -0.1 | |
| | | | | | | 2,3 | | -1.0 | |
| | | | M | | | | | -0.1 | |
| | | | D | 01 B,S,Q,V | | 1 | | -0.1 | |
| | | | R | | | | | -0.1 | |
| Control input capacitance 3012 | $C_C$ | See 4.4.1c $T_C$ = +25°C | | All All | GND | 4 | | 10 | pF |
| Input/output capacitance 3012 | $C_{I/O}$ | See 4.4.1c $T_C$ = +25°C | | 01 All | 5.5 V | 4 | | 15 | pF |
| | | | | 02 All | 5.0 V | | | 24 | |
| Power dissipation capacitance 3012 | $C_{PD}$ 9/ | See 4.4.1c $T_C$ = +25°C | | 01 All | 5.0 V | 4 | | 65 | pF |
| | | | | 02 All | 5.0 V | | | 83 | |
| Quiescent supply current delta, TTL input levels 3005 | $\Delta I_{CC}$ 5/ 6/ 10/ | For input under test $V_{IN}$ = $V_{CC}$ - 2.1 V For all other inputs $V_{IN}$ = $V_{CC}$ or GND | | All B,S,Q,V | 5.5 V | 3 | | 1.6 | mA |
| | | | | | | 1,2 | | 1.0 | |
| | | | | All M | | 1,2,3 | | 1.6 | |
| | | | M | | | | | 1.6 | |
| | | | D | 01 B,S,Q,V | | 1 | | 1.6 | |
| | | | R | | | | | 3.0 | |
| Quiescent supply current output high 3005 | $I_{CCH}$ 5/ 6/ | $\overline{OE}$ = GND For all other inputs $V_{IN}$ = $V_{CC}$ | | All B,S,Q,V | 5.5 V | 1 | | 2.0 | µA |
| | | | | | | 2 | | 40.0 | |
| | | | | All M | | 1 | | 8.0 | |
| | | | | | | 2,3 | | 160 | |
| | | | M | | | | | 300.0 | |
| | | | D | 01 B,S,Q,V | | 1 | | 1.0 | mA |
| | | | R | | | | | 3.0 | |

See footnotes at end of table.

查询"5962-8766301B2A"供应商

TABLE I. Electrical performance characteristics - Continued.

| Test and MIL-STD-883 test method 1/ | Symbol | Test conditions unless otherwise specified 2/ $-55°C \le T_C \le +125°C$ $4.5\ V \le V_{CC} \le 5.5\ V$ | Device type 3/ and device class | $V_{CC}$ | Group A subgroups | Limits 2/ Min | Limits 2/ Max | Unit |
|---|---|---|---|---|---|---|---|---|
| Quiescent supply current output low 3005 | $I_{CCL}$ 5/ 6/ | $\overline{OE}$ = GND For all other inputs $V_{IN}$ = GND | All B,S,Q,V | 5.5 V | 1 | | 2.0 | µA |
| | | | | | 2 | | 40.0 | |
| | | | All M | | 1 | | 8.0 | |
| | | | | | 2,3 | | 160 | |
| | | M | 01 B,S,Q,V | | 1 | | 300.0 | |
| | | D | | | | | 1.0 | |
| | | R | | | | | 3.0 | mA |
| Quiescent supply current outputs three-state 3005 | $I_{CCZ}$ 5/ 6/ | $\overline{OE}$ = $V_{CC}$ For all other outputs $V_{IN}$ = $V_{CC}$ or GND | All B,S,Q,V | 5.5 V | 1 | | 2.0 | µA |
| | | | | | 2 | | 40.0 | |
| | | | All M | | 1 | | 8.0 | |
| | | | | | 2,3 | | 160 | |
| | | M | 01 B,S,Q,V | | 1 | | 300.0 | |
| | | D | | | | | 1.0 | |
| | | R | | | | | 3.0 | mA |
| Low level ground bounce noise | $V_{GBL}$ 11/ 12/ | $V_{LD}$ = 2.5 V, $I_{OL}$ = +24 mA, (See figure 4) | All B,S,Q,V | 4.5 V | 4 | | 2000 | mV |
| High level ground bounce noise | $V_{GBH}$ 11/ 12/ | $V_{LD}$ = 2.5 V, $I_{OH}$ = -24 mA, (See figure 4) | All B,S,Q,V | 4.5 V | 4 | | 2000 | mV |
| Latch-up input/ output over-voltage | $I_{CC}$ (O/V1) 13/ | $t_w \ge 100\ \mu s$ $t_{cool} \ge t_w$ $5\ \mu s \le t_r \le 5\ ms$ $5\ \mu s \le t_f \le 5\ ms$ $V_{test}$ = 6.0 V $V_{CCQ}$ = 5.5 V $V_{over}$ = 10.5 V | All B,S,Q,V | 5.5 V | 2 | | 200 | mA |
| Latch-up input/ output positive over-current | $I_{CC}$ (O/I1+) 13/ | $t_w \ge 100\ \mu s$ $t_{cool} \ge t_w$ $5\ \mu s \le t_r \le 5\ ms$ $5\ \mu s \le t_f \le 5\ ms$ $V_{test}$ = 6.0 V $V_{CCQ}$ = 5.5 V $I_{trigger}$ = +120 mA | All B,S,Q,V | 5.5 V | 2 | | 200 | mA |

See footnotes at end of table.

查询"5962-8766301B2A"供应商

TABLE I. Electrical performance characteristics - Continued.

| Test and MIL-STD-883 test method 1/ | Symbol | Test conditions unless otherwise specified 2/ $-55°C \le T_C \le +125°C$ $4.5\ V \le V_{CC} \le 5.5\ V$ | Device type 3/ and device class | $V_{CC}$ | Group A subgroups | Limits 2/ Min | Limits 2/ Max | Unit |
|---|---|---|---|---|---|---|---|---|
| Latch-up input/ output negative over-current | $I_{CC}$ (O/I1-) 13/ | $t_w \ge 100\ \mu s$<br>$t_{cool} \ge t_w$<br>$5\ \mu s \le t_r \le 5\ ms$<br>$5\ \mu s \le t_f \le 5\ ms$<br>$V_{test} = 6.0\ V$<br>$V_{CCQ} = 5.5\ V$<br>$I_{trigger} = -120\ mA$ | All B,S,Q,V | 5.5 V | 2 | | 200 | mA |
| Latch-up supply over-voltage | $I_{CC}$ (O/V2) 13/ | $t_w \ge 100\ \mu s$<br>$t_{cool} \ge t_w$<br>$5\ \mu s \le t_r \le 5\ ms$<br>$5\ \mu s \le t_f \le 5\ ms$<br>$V_{test} = 6.0\ V$<br>$V_{CCQ} = 5.5\ V$<br>$V_{over} = 9.0\ V$ | All B,S,Q,V | 5.5 V | 2 | | 100 | mA |
| Truth table test output voltage 3014 | 5/ 6/ 14/ | $V_{IL} = 0.40\ V$<br>$V_{IH} = 2.40\ V$<br>Verify output $V_O$ | All<br>All | 4.5 V | 7,8 | L | H | |
| | | M | 01 B,S,Q,V | | 7 | L | H | |
| | | D | | | | L | H | |
| | | R | | | | L | H | |
| | | $V_{IL} = 0.40\ V$<br>$V_{IH} = 2.40\ V$<br>Verify output $V_O$ | All M | 5.5 V | 7,8 | L | H | |
| Propagation delay time, data to output, An to Bn and Bn to An 3003 | $t_{PHL}$, $t_{PLH}$ 5/ 6/ 15/ 16/ | $C_L = 50\ pF$ minimum,<br>$R_L = 500\Omega$,<br>See figure 5 | 01 B,S,Q,V | 4.5 V | 9,11 | 1.0 | 8.0 | ns |
| | | | | | 10 | 1.0 | 10.0 | |
| | | | 02 B,S,Q,V | | 9,11 | 1.0 | 9.2 | |
| | | | | | 10 | 1.0 | 10.6 | |
| | | | 01 M | | 9 | 1.0 | 8.0 | |
| | | | | | 10,11 | 1.0 | 10.0 | |
| | | | 02 M | | 9 | 1.0 | 9.2 | |
| | | | | | 10,11 | 1.0 | 10.6 | |
| | | M | 01 B,S,Q,V | | 9 | 1.0 | 8.0 | |
| | | D | | | | 1.0 | 8.0 | |
| | | R | | | | 1.0 | 8.0 | |

See footnotes at end of table.

查询"5962-8766301B2A"供应商

TABLE I. Electrical performance characteristics - Continued.

| Test and MIL-STD-883 test method 1/ | Symbol | Test conditions unless otherwise specified 2/ $-55°C \le T_C \le +125°C$ $4.5\ V \le V_{CC} \le 5.5\ V$ | Device type 3/ and device class | $V_{CC}$ | Group A subgroups | Limits 2/ Min | Limits 2/ Max | Unit |
|---|---|---|---|---|---|---|---|---|
| Propagation delay time, output enable, OE to An and OE to Bn 3003 | $t_{PZH}$, $t_{PZL}$ 5/ 6/ 15/ 16/ | $C_L$ = 50 pF minimum, $R_L$ = 500Ω, See figure 5 | 01 B,S,Q,V | 4.5 V | 9,11 | 1.0 | 10.0 | ns |
| | | | | | 10 | 1.0 | 13.0 | |
| | | | 02 B,S,Q,V | | 9,11 | 1.0 | 12.0 | |
| | | | | | 10 | 1.0 | 14.1 | |
| | | | 01 M | | 9 | 1.0 | 10.0 | |
| | | | | | 10,11 | 1.0 | 13.0 | |
| | | | 02 M | | 9 | 1.0 | 12.0 | |
| | | | | | 10,11 | 1.0 | 14.1 | |
| | | M | 01 B,S,Q,V | | 9 | 1.0 | 10.0 | |
| | | D | | | | 1.0 | 10.0 | |
| | | R | | | | 1.0 | 10.0 | |
| Propagation delay time, output disable, OE to An and OE to Bn 3003 | $t_{PHZ}$, $t_{PLZ}$ 5/ 6/ 15/ 16/ | $C_L$ = 50 pF minimum, $R_L$ = 500Ω, See figure 5 | 01 B,S,Q,V | 4.5 V | 9,11 | 1.0 | 10.0 | ns |
| | | | | | 10 | 1.0 | 12.0 | |
| | | | 02 B,S,Q,V | | 9,10 | 1.0 | 12.9 | |
| | | | | | 11 | 1.0 | 14.6 | |
| | | | 01 M | | 9 | 1.0 | 10.0 | |
| | | | | | 10,11 | 1.0 | 12.0 | |
| | | | 02 M | | 9 | 1.0 | 12.9 | |
| | | | | | 10,11 | 1.0 | 14.6 | |
| | | M | 01 B,S,Q,V | | 9 | 1.0 | 10.0 | |
| | | D | | | | 1.0 | 10.0 | |
| | | R | | | | 1.0 | 10.0 | |

See footnotes at end of table.

查询"5962-8766301B2A"供应商

1/ For tests not listed in the referenced MIL-STD-883 (e.g. $\Delta I_{CC}$), utilize the general test procedure under the conditions listed herein. All inputs and outputs shall be tested, as applicable, to the tests in table I herein.

2/ Each input/output, as applicable shall be tested at the specified temperature for the specified limits. Output terminals not designated shall be high level logic, low level logic, or open, except as follows:

a. $V_{IC}$ (pos) tests, the GND terminal can be open. $T_C$ = +25°C.

b. $V_{IC}$ (neg) tests, the $V_{CC}$ terminal shall be open. $T_C$ = +25°C.

c. All $I_{CC}$ and $\Delta I_{CC}$ tests, the output terminal shall be open. When performing these tests, the current meter shall be placed in the circuit such that all current flows thru the meter.

Additional detailed information on qualified devices (i.e., pin for pin conditions and testing sequence) is available from the qualifying activity (DESC-EQM) upon request. For negative and positive voltage and current values: The sign designates the potential difference in reference to GND and the direction of current flow respectively; and the absolute value of the magnitude, not the sign, is relative to the minimum and maximum limits, as applicable, listed herein.

3/ The word "All" in the device type and device class column, means non-RHA limits for all device types and classes. Where M,D, and R in the conditions column are postirradiation limits for those device types and classes specified in the device type and device class column.

4/ For device classes B and S, this test is guaranteed, if not tested, to the limits specified in table I.

5/ RHA samples do not have to be tested at -55°C and +125°C prior to irradiation.

6/ When performing post irradiation electrical measurements for RHA level, $T_A$ = +25°C. Limits shown are guaranteed at $T_A$ = +25°C ±5°C.

7/ Transmission driving tests are performed at $V_{CC}$ = 5.5 V dc with a 2 ms duration maximum. This test may be performed using $V_{IN}$ = $V_{CC}$ or GND. When $V_{IN}$ = $V_{CC}$ or GND is used, the test is guaranteed for $V_{IN}$ = 2.0 V or 0.8 V.

查询"5962-8766301B2A"供应商

8/ For the $I_{OZH}$ and $I_{OZL}$ tests, the tristate output conditions are required. For I/O pins, the $I_{IH}$ and $I_{IL}$ measurements shall not be directly performed. These measurements are included in the $I_{OZH}$ and $I_{OZL}$ limits, respectively.

9/ Power dissipation capacitance ($C_{PD}$) determines the no load dynamic power consumption, $P_D = (C_{PD} + C_L)(V_{CC} \times V_{CC})f + (I_{CC} \times V_{CC}) + (n \times d \times \Delta I_{CC} \times V_{CC})$. The dynamic current consumption, $I_S = (C_{PD} + C_L) V_{CC} f + I_{CC} + n \times d \times \Delta I_{CC}$. For both $P_D$ and $I_S$: n is the number of device inputs at TTL levels, f is the frequency of the input signal; and d is the duty cycle of the input signal.

10/ This test may be performed either one input at a time (preferred method) or with all input pins simultaneously at $V_{IN} = V_{CC} -2.1$ V (alternate method). Classes B, S, Q, and V shall use the preferred method. When the test is performed using the alternate test method: the maximum limits is equal to the number of inputs at a high TTL input level times 1.6 mA; and the preferred method and limits are guaranteed.

11/ This test is for qualification only. Ground bounce tests are performed on a nonswitching (quiescent) output and are used to measure the magnitude of induced noise caused by other simultaneously switching outputs. The test is performed on a low noise bench test fixture with all outputs fully dc loaded ($I_{OL}$ maximum and $I_{OH}$ maximum = i.e., ±24 mA) and 50 pF of load capacitance (see figure 4). The loads must be located as close as possible to the device output. Inputs are then conditioned with 1 MHz pulse ($t_r = t_f = 3.5 \pm 1.5$ ns) switching simultaneously and in phase such that one output is forced low and all others (possible) are switched. The low level ground bounce noise is measured at the quiet output using a F.E.T. oscilloscope probe with at least 1 MΩ impedance. Measurement is taken from the peak of the largest positive pulse with respect to the nominal low level output voltage (figure 4). The device inputs are then conditioned such that the output under test is at a high nominal $V_{OH}$ level. The high level ground bounce measurement is then measured from nominal $V_{OH}$ level to the largest negative peak. This procedure is repeated such that all outputs are tested at a high and low level with a maximum number of outputs switching.

12/ When used in asynchronous TTL compatible systems, ground bounce ($V_{GBL}$ and $V_{GBH}$) = 2,000 mV can be a possible problem.

13/ See JEDEC STD. 17 for electrically induced latch-up test methods and procedures. The values listed for $V_{trigger}$, $I_{trigger}$ and $V_{over}$, are to be accurate within ±5 percent.

14/ Tests shall be performed in sequence, attributes data only. Functional tests shall include the truth table and other logic patterns used for fault detection. Functional tests shall be performed in sequence as approved by the qualifying activity on qualified devices. H ≥ 2.5 V, L < 2.5 V; high inputs = 2.4 V and low inputs = 0.4 V. The input voltage levels have the allowable tolerances per MIL-STD-883 already incorporated. Functional tests at $V_{CC}$ = 4.5 V are worst case for RHA specified devices.

15/ Device classes B and S are tested at $V_{CC}$ = 4.5 V at $T_C$ = +125°C for sample testing and at $V_{CC}$ = 4.5 V at $T_C$ = +25°C for screening. Other voltages of $V_{CC}$ and temperatures are guaranteed, if not tested, see 4.4.1d.

16/ AC limits at $V_{CC}$ = 5.5 V are equal to the limits at $V_{CC}$ = 4.5 V and guaranteed by testing at $V_{CC}$ = 4.5 V. Minimum ac limits for $V_{CC}$ = 5.5 V are 1.0 ns and guaranteed by guardbanding the $V_{CC}$ = 4.5 V minimum limits to 1.5 ns. For propagation delay tests, all paths must be tested.

查询"5962-8766301B2A"供应商

| Device types | 01 | 02 | |
|---|---|---|---|
| Case outlines | R, S, and 2 | L | 3 |
| Terminal number | Terminal symbol | | |
| 1 | $\overline{T}/R$ | A0 | NC |
| 2 | A0 | A1 | $V_{CC}$ |
| 3 | A1 | A2 | B3 |
| 4 | A2 | A3 | B2 |
| 5 | A3 | GND | B1 |
| 6 | A4 | GND | $\overline{B0}$ |
| 7 | A5 | GND | $\overline{T/R}$ |
| 8 | A6 | GND | NC |
| 9 | A7 | A4 | A0 |
| 10 | GND | A5 | A1 |
| 11 | B7 | A6 | A2 |
| 12 | B6 | A7 | A3 |
| 13 | B5 | OE | GND |
| 14 | B4 | B7 | GND |
| 15 | B3 | B6 | NC |
| 16 | B2 | B5 | GND |
| 17 | B1 | B4 | GND |
| 18 | $\overline{B0}$ | $V_{CC}$ | A4 |
| 19 | OE | $V_{CC}$ | A5 |
| 20 | $V_{CC}$ | B3 | A6 |
| 21 | --- | B2 | A7 |
| 22 | --- | B1 | NC |
| 23 | --- | $\overline{B0}$ | OE |
| 24 | --- | $\overline{T/R}$ | B7 |
| 25 | --- | --- | B6 |
| 26 | --- | --- | B5 |
| 27 | --- | --- | B4 |
| 28 | --- | --- | $V_{CC}$ |

FIGURE 1. Terminal connections.

| Device types 01 and 02 | | |
|---|---|---|
| Inputs | | Output |
| $\overline{OE}$ | $\overline{T/R}$ | |
| L | L | Bus B data to Bus A |
| L | H | Bus A data to Bus B |
| H | X | High Z state |

H = High voltage level
L = Low voltage level
X = Immaterial
Z = High impedance

NOTE: When $\overline{OE}$ = H, all inputs and outputs are in the Z state.

FIGURE 2. Truth table.

查询"5962-8766301B2A"供应商

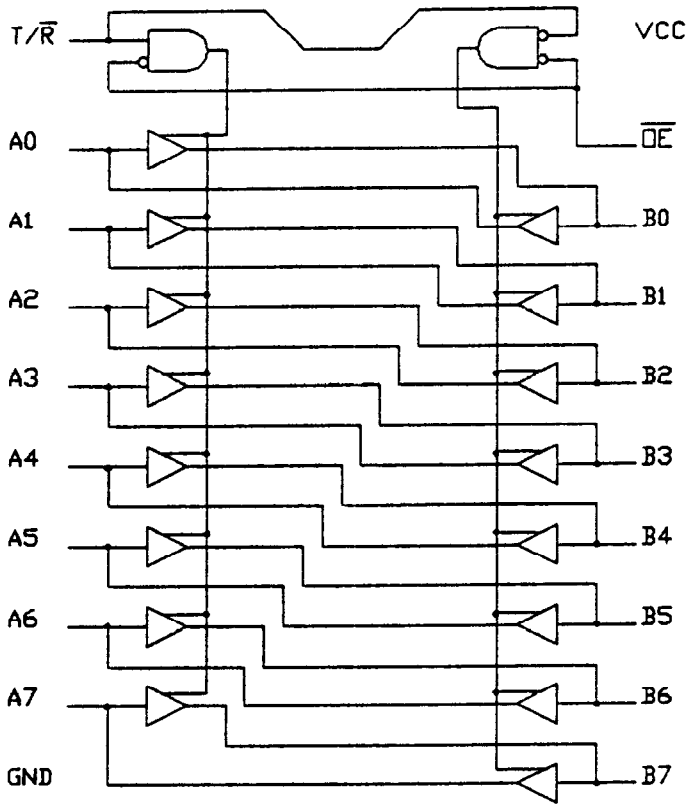


FIGURE 3. Logic diagram.

查询"5962-8766301B2A"供应商

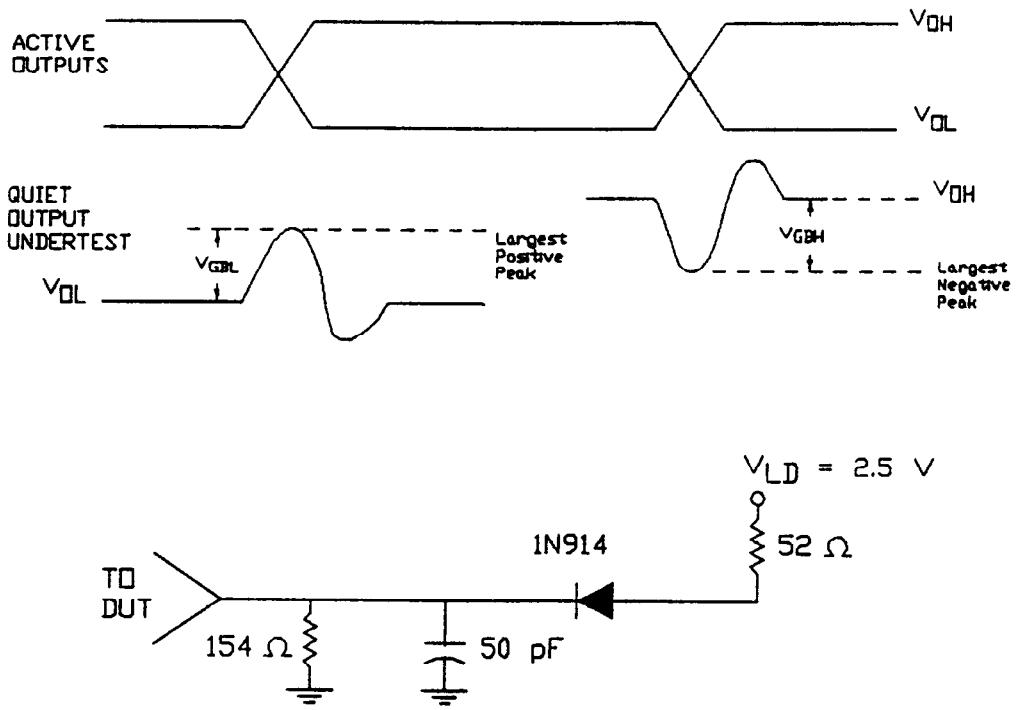


NOTE: Resistor and capacitor tolerances = ±10 %

FIGURE 4. Ground bounce waveforms and test circuit.

查询"5962-8766301B2A"供应商

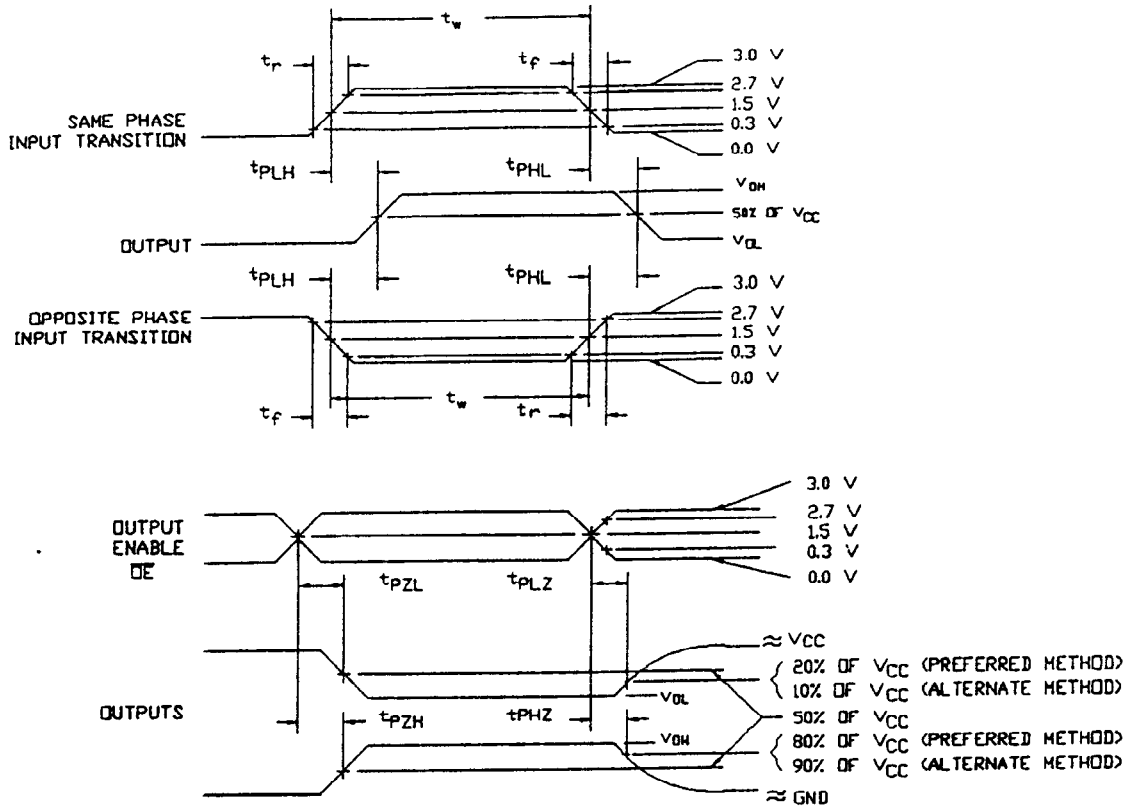


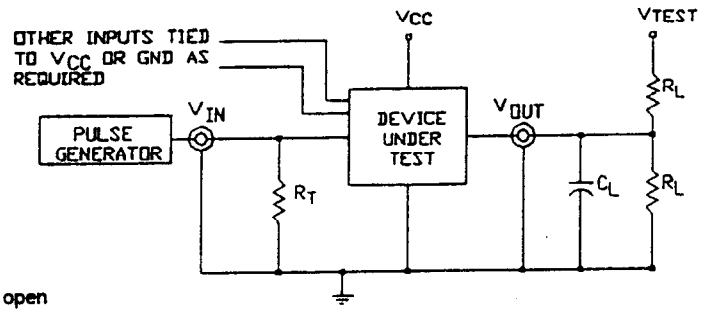


Notes:

Perferred method - used for device type 02:
When measuring $t_{PHZ}$ and $t_{PZH}$: V test = GND
When measuring $t_{PLZ}$ and $t_{PZL}$: V test = 2 X $V_{CC}$
When measuring $t_{PLH}$ and $t_{PHL}$: V test = open

Alternate method - used for device type 01:
When measuring $t_{PLZ}$ and $t_{PZL}$: V test = 2 X $V_{CC}$
When measuring $t_{PHZ}$, $t_{PZH}$, $t_{PLH}$ and $t_{PHL}$: V test = open

$C_L$ = 50 pF minimum or equivalent (includes test jig and probe capacitance)
$R_L$ = 500Ω or equivalent
$R_T$ = 50Ω or equivalent
Input signal from pulse generator: $V_{IN}$ = 0.0 V to 3.0 V; PRR ≤ 10 MHz; $t_r$ ≤ 3 ns; $t_f$ ≤ 3 ns; duty cycle = 50 percent.
Timing parameters shall be tested at a minimum input frequency of 1 MHz.

FIGURE 5. Switching waveforms and test circuit.

查询"5962-8766301B2A"供应商

## 4. QUALITY ASSURANCE PROVISIONS

4.1 Sampling and inspection. For device class M, sampling and inspection procedures shall be in accordance with section 4 of MIL-M-38510 to the extent specified in MIL-STD-883 (see 3.1 herein). For device class B, sampling and inspection procedures shall be in accordance with MIL-M-38510 and method 5005 of MIL-STD-883, except as modified herein. For device class S, sampling and inspection procedures shall be in accordance with MIL-M-38510, and methods 5005 and 5007 of MIL-STD-883, except as modified herein. For device classes Q and V, sampling and inspection procedures shall be in accordance with MIL-I-38535 and the device manufacturer's QM plan.

4.1.1 Burn-in and life test circuits. For device classes B and S, the burn-in and life test circuits shall be constructed so that the devices are stressed at the maximum operating conditions stated in 4.2.1a5 or 4.2.1a6 as applicable, or equivalent as approved by the qualifying activity.

4.2 Screening. For device class M, screening shall be in accordance with method 5004 of MIL-STD-883, and shall be conducted on all devices prior to quality conformance inspection. For device classes B and S, screening shall be in accordance with method 5004 of MIL-STD-883, and shall be conducted on all devices prior to qualification and quality conformance inspection. For device classes Q and V, screening shall be in accordance with MIL-I-38535, and shall be conducted on all devices prior to qualification and technology conformance inspection. The following additional criteria shall apply.

4.2.1 Additional criteria for device classes M, B, and S.

a. Burn-in test, method 1015 of MIL-STD-883.

(1) Test condition A, B, C or D. For device class M, the test circuit shall be submitted to DESC-ECC for review with the certificate of compliance. For device classes B and S, the test circuit shall be submitted to the qualifying activity.

(2) $T_A$ = +125°C, minimum.

(3) Delete the sequence specified in 3.1.10 through 3.1.14 of method 5004 and substitute the first 7 test requirements of table IIA herein.

(4) For device class M, unless otherwise noted, the requirements for device class B in method 1015 of MIL-STD-883 shall be followed.

(5) Static burn-in, test condition A, test method 1015 of MIL-STD-883. Test duration for each static test shall be 24 hours minimum for class S devices and in accordance with table I of method 1015 for class B devices.

(a) For static burn-in I, all inputs shall be connected to GND. Outputs may be open or connected to $V_{CC}/2$ ±0.5 V. Resistors R1 are optional on both inputs and open outputs, and required on outputs connected to $V_{CC}/2$ ±0.5 V. R1 = 220Ω to 47 kΩ.

(b) For static burn-in II, all inputs shall be connected through the R1 resistors to $V_{CC}$. Outputs may be open or connected to $V_{CC}/2$ ±0.5 V. Resistors R1 are optional on open outputs, and required on outputs connected to $V_{CC}/2$ ±0.5 V. R1 = 220Ω to 47 kΩ.

(c) $V_{CC}$ = 5.5 V ±0.5 V.

(6) Dynamic burn-in, test condition D, method 1015 of MIL-STD-883,

(a) Input resistors = 220Ω to 2 kΩ ±20 percent.

(b) Output resistors = 220Ω ±20 percent.

(c) $V_{CC}$ = 5.5 V ±0.5 V.

(d) The output enable control pin(s) shall be connected through the resistors in parallel to $V_{CC}$ or GND, as applicable, to enable the outputs. The directional control pins shall be connected through a resistor to $V_{CC}$ or GND. All other inputs shall be connected through the resistors in parallel to a common clock pulse (CP). as applicable. Outputs shall be connected through the resistors to $V_{CC}/2$ ±0.5 V.

(e) CP = 25 kHz to 1 MHz square wave; duty cycle = 50 percent ±15 percent; $V_{IH}$ = 4.5 V to $V_{CC}$, $V_{IL}$ = 0 V ±0.5 V; $t_r$, $t_f$ ≤ 100 ns.

查询"5962-8766301B2A"供应商

b. Interim and final electrical test parameters shall be as specified in table IIA herein.

c. For class S devices, post dynamic burn-in, or class B devices, post static burn-in, electrical parameter measurements may, at the manufacturer's option, be performed separately or included in the final electrical parameter requirements.

TABLE IIA. Electrical test requirements.

| Test requirements, MIL-STD-883 test method (one-part one-part number reference paragraph) | Subgroups 1/ (per method 5005, table I) | | | Subgroups 1/ (per MIL-I-38535, table III) | |
|---|---|---|---|---|---|
| | Device class M | Device 2/ class B | Device 2/ class S | Device class Q | Device class V |
| Interim electrical parameters, method 5004 | | 1 | 1 | 1 | 1 |
| Static burn-in I, method 1015 (4.2.1a) | 3/ | Not required | Required 4/ | Not required | Required 4/ |
| Interim electrical parameters, method 5004 (4.2.1b) | | | 1 5/ | | 1 5/ |
| Static burn-in II, method 1015 (4.2.1a) | 3/ | Required 6/ | Required 4/ | Required 6/ | Required 4/ |
| Interim electrical parameters, method 5004 (4.2.1b) | | 1 2/,5/ | 1 2/,5/ | 1 2/,5/ | 1 2/,5/ |
| Dynamic burn-in I, method 1015 (4.2.1a) | 3/ | Not required | Required 4/ | Not required | Required 4/ |
| Interim electrical parameters, method 5004 (4.2.1b) | | | 1 5/ | | 1 5/ |
| Final electrical parameters, method 5004 | 1,2,3,7, 2/ 8,9 | 1,2, 2/ 6/ 7,9 | 1,2,7,9 2/ | 1,2,3, 2/,6/ 7,8,9,10,11 | 1,2,3, 2/ 7,8,9,10,11 |
| Group A test requirements, method 5005 (4.4.1) | 1,2,3,4,7, 8,9,10,11 | 1,2,3,4,7, 8,9,10,11 | 1,2,3,4,7, 8,9,10,11 | 1,2,3,4,7, 8,9,10,11 | 1,2,3,4,7, 8,9,10,11 |
| Group B end-point electrical parameters, method 5005 (4.4.2) | | | 1,2,3,7, 5/ 8,9,10,11 | | |
| Group C end-point electrical parameters, method 5005 (4.4.3) | 1,2,3 | 1,2 5/ | | 1,2,3 5/ | 1,2,3,7, 5/ 8,9,10,11 |
| Group D end-point electrical parameters, method 5005 (4.4.4) | 1,2,3 | 1,2 | 1,2,3 | 1,2,3 | 1,2,3 |
| Group E end-point electrical parameters, method 5005 (4.4.5) | 1,7,9 | 1,7,9 | 1,7,9 | 1,7,9 | 1,7,9 |

See footnotes on next page.

查询"5962-8766301B2A"供应商

1/ Blank spaces indicate tests are not applicable.

2/ PDA applies to subgroup 1 (see 4.2.3). For device classes S and V, PDA applies to subgroups 1 and 7 (see 4.2.3).

3/ The required test condition used for burn-in shall be that submitted to DESC-ECC with the certificate of compliance, see 4.2.1a herein.

4/ On all class S lots, the device manufacturer shall maintain read-and-record data (as a minimum on disk) for burn-in electrical parameters (group A, subgroup 1), in accordance with test method 5004 of MIL-STD-883. For preburn-in and interim electrical parameters the read-and-record requirements are for delta measurements only.

5/ Delta limits shall be required only on table I, subgroup 1. The delta values shall be computed with reference to the previous interim electrical parameters. The Delta limits are specified in table III.

6/ The device manufacturer may at his option either complete subgroup 1 electrical parameter measurements, including delta measurements, within 96 hours after burn-in completion (removal of bias; or may complete subgroup 1 electrical measurements without delta measurements within 24 hours after burn-in completion (removal of bias). When the manufacturer elects to perform the subgroup 1 electrical parameter measurements without delta measurements, there is no requirement to perform the pre-burn-in electrical tests (first interim electrical parameters test in table IIA).

4.2.2 Additional criteria for device classes Q and V.

a. The burn-in test duration, test condition and test temperature or approved alternatives shall be as specified in the device manufacturer's QM plan in accordance with MIL-I-38535. The burn-in test circuit shall be submitted to DESC-ECC with the certificate of compliance and shall be under the control of the device manufacturer's Technology Review Board (TRB) in accordance with MIL-I-38535.

b. Interim and final electrical test parameters shall be as specified in table IIA herein.

c. Additional screening for device class V beyond the requirements of device class Q shall be as specified in appendix B of MIL-I-38535 and as detailed in table IIB herein.

4.2.3 Percent defective allowable (PDA).

a. The PDA for class S devices shall be 5 percent for static burn-in and 5 percent for dynamic burn-in, based on the exact number of devices submitted to each separate burn-in.

b. Static burn-in I and II failures shall be cumulative for determining the PDA.

c. The PDA for class B devices shall be in accordance with MIL-M-38510 for static burn-in. Dynamic burn-in is not required.

d. The PDA for class M devices shall be in accordance with MIL-M-38510 for static burn-in and dynamic burn-in.

e. Those devices whose measured characteristics, after burn-in, exceed the specified delta limits or electrical parameter limits specified in table I, subgroup 1, are defective and shall be removed from the lot. The verified number of failed devices times 100 divided by the total number of devices in the lot initially submitted to burn-in shall be used to determine the percent defective for the lot and the lot shall be accepted or rejected based on the specified PDA.

查询"5962-8766301B2A"供应商

TABLE IIB. Additional screening for device class V.

| Test | MIL-STD-883, test method | Lot requirement |
|---|---|---|
| Particle impact noise detection | 2020 | 100Δ |
| Internal visual | 2010, condition A or approved alternate | 100Δ |
| Nondestructive bond pull | 2023 or approved alternate | 100Δ |
| Reverse bias burn-in | 2010 | 100Δ |
| Burn-in | 1015, total of 240 hours at +125°C | 100Δ |
| Radiographic | 2012 | 100Δ |

TABLE III. Delta limits at +25°C.

| Parameter 1/ | Device types | Limits |
|---|---|---|
| $I_{cch}$, $I_{ccl}$, $I_{ccz}$ | All | ±100 nA |

1/ These parameters shall be recorded before and after the required burn-in and life tests to determine delta limits.

查询"5962-8766301B2A"供应商

4.3 Qualification inspection.

4.3.1 Qualification inspection for device classes B and S. Qualification inspection for device classes B and S shall be in accordance with MIL-M-38510. Inspections to be performed shall be those specified in method 5005 of MIL-STD-883 and herein for groups A, B, C, D, and E inspections (see 4.4.1 through 4.4.5).

4.3.2 Qualification inspection for device classes Q and V. Qualification inspection for device classes Q and V shall be in accordance with MIL-I-38535. Inspections to be performed shall be those specified in MIL-I-38535 and herein for groups A, B, C, D, and E inspections (see 4.4.1 through 4.4.5).

4.3.3 Electrostatic discharge sensitivity qualification inspection. Electrostatic discharge sensitivity (ESDS) testing shall be performed in accordance with MIL-STD-883, method 3015. ESDS testing shall be measured only for initial qualification and after process or design changes which may affect ESDS classification. For device classes B,S,Q, AND V only those device types that pass ESDS testing at 2,000 volts or greater shall be considered as conforming to the requirements of this specification.

4.4 Conformance inspection. Quality conformance inspection for device class M shall be in accordance with MIL-STD-883 (see 3.1 herein) and as specified herein. Quality conformance inspection for device classes B and S shall be in accordance with MIL-M-38510 and as specified herein. Inspections to be performed for device classes M, B, and S shall be those specified in method 5005 of MIL-STD-883 and herein for groups A, B, C, D, and E inspections (see 4.4.1 through 4.4.5). Technology conformance inspection for classes Q and V shall be in accordance with MIL-I-38535 including groups A, B, C, D, and E inspections and as specified herein except where option 2 of MIL-I-38535 permits alternate in-line control testing.

4.4.1 Group A inspection.

a. Tests shall be as specified in table IIA herein.

b. Latch-up and ground bounce tests are required for device classes B, S, Q, and V. These tests shall be performed only for initial qualification and after process or design changes which may affect the performance of the device. Latch-up tests shall be considered destructive. For latch-up and ground-bounce tests, test all applicable pins on five devices with zero failures.

c. $C_C$, $C_{I/O}$, and $C_{PD}$ shall be measured only for initial qualification and after process or design changes which may affect capacitance. $C_C$ and $C_{I/O}$ shall be measured between the designated terminal and GND at a frequency of 1 MHz. $C_{PD}$ shall be tested in accordance with the latest revision of JEDEC Standard No. 20 and table I herein. For $C_C$, $C_{I/O}$, and $C_{PD}$, test all applicable pins on five devices with zero failures.

d. For device classes B and S, subgroups 9 and 11 tests shall be measured only for initial qualification and after process or design changes which may affect dynamic performance.

e. For device class M, subgroups 7 and 8 tests shall be sufficient to verify the truth table in figure 2 herein. The test vectors used to verify the truth table shall test all possible input to output logic patterns. For device classes B and S, subgroups 7 and 8 tests shall be sufficient to verify the truth table as approved by the qualifying activity. For device classes Q and V, subgroups 7 and 8 shall include verifying the functionality of the device; these tests shall have been fault graded in accordance with MIL-STD-883, test method 5012 (see 1.5 herein).

4.4.2 Group B inspection. The group B inspection end-point electrical parameters shall be as specified in table IIA herein and as follows.

a. Class S steady-state life (accelerated) shall be conducted using test condition D of method 1005 of MIL-STD-883 and the circuit described in 4.2.1a6 herein, or equivalent as approved by the qualifying activity. The actual test circuit used shall be submitted to the qualifying activity.

b. End-point electrical parameters shall be as specified in table IIA herein. Delta limits shall apply only to subgroup 5 of group B inspections and shall consist of tests specified in table III herein.

4.4.3 Group C inspection. The group C inspection end-point electrical parameters shall be as specified in table IIA herein.

咨询：5962-8766301DZA 供应商

4.4.3.1 Additional criteria for device classes M and B. Steady-state life test conditions, method 1005 of MIL-STD-883:

a. End-point electrical parameters shall be as specified in table IIA herein. Delta limits shall apply only to subgroup 1 of group C inspection and shall consist of tests specified in table III herein.

b. Steady-state life test conditions, method 1005 of MIL-STD-883:

(1) Test condition A, B, C or D. For device class M, the test circuit shall be submitted to DESC-ECC for review with the certificate of compliance. For device class B, the test circuit shall be submitted to the qualifying activity.

(2) $T_A$ = +125°C, minimum.

(3) Test duration: 1,000 hours, except as permitted by method 1005 of MIL-STD-883.

(4) For device class M, unless otherwise noted, the requirements for device class B in method 1005 of MIL-STD-883 shall be followed.

4.4.3.2 Additional criteria for device classes Q and V. The steady-state life test duration, test condition and test temperature or approved alternatives shall be as specified in the device manufacturer's QM plan in accordance with MIL-I-38535. The steady-state life test circuit shall be submitted to DESC-ECC with the certificate of compliance and shall be under the control of the device manufacturer's TRB in accordance with MIL-I-38535.

4.4.4 Group D inspection. Group D inspection shall be in accordance with table IV of method 5005 of MIL-STD-883. End-point electrical parameters shall be as specified in table IIA herein.

4.4.5 Group E inspection. Group E inspection is required only for parts intended to be marked as radiation hardness assured (see 3.5 herein). RHA levels for device classes B, S, Q, and V shall be M, D, and R and for device class M shall be M and D. RHA quality conformance inspection sample tests shall be performed at the RHA level specified in the acquisition document.

a. RHA tests for device classes B and S for levels M, D, and R or for device class M for levels M and D shall be performed through each level to determine at what levels the devices meet the RHA requirements. These RHA tests shall be performed for initial qualification and after design or process changes which may affect the RHA performance of the device.

b. End-point electrical parameters shall be as specified in table IIA herein.

c. Prior to total dose irradiation, each selected sample shall be assembled in its qualified package. It shall pass the specified group A electrical parameters in table I for subgroups specified in table IIA herein.

d. For device classes M, B, and S, the devices shall be subjected to radiation hardness assured tests as specified in MIL-M-38510 for RHA level being tested. For device classes Q and V, the devices shall be subjected to radiation hardness assured tests as specified in MIL-I-38535 for RHA level being tested. All devices classes must meet the postirradiation end-point electrical parameter limits as defined in table I at $T_A$ = +25°C ±5°C, after exposure.

e. Prior to and during total dose irradiation characterization and testing, the devices for characterization shall be biased so that 50 percent are at inputs high and 50 percent are at inputs low, and the devices for testing shall be biased to the worst case condition established during characterization. The devices shall be biased as follows:

(1) Inputs tested high, $V_{CC}$= 5.5 V dc +5 percent, $R_{CC}$= 10Ω ±20 percent, $V_{IN}$= 5.0 V dc +5 percent, $R_{IN}$= 1 kΩ ±20 percent and all outputs are open. The output enable control pin(s) shall be connected to $R_{IN}$ in parallel to $V_{CC}$ or GND, as applicable, to enable the outputs.

(2) Inputs tested low, $V_{CC}$= 5.5 V dc +5 percent, $R_{CC}$= 10Ω ±20 percent, $V_{IN}$= 0.0 V dc, $R_{IN}$= 1 kΩ ±20 percent and all outputs are open. The output enable control pin(s) shall be connected to $R_{IN}$ in parallel to $V_{CC}$ or GND, as applicable, to enable the outputs.

f. For device classes M, B, and S, subgroups 1 and 2 in table V, method 5005 of MIL-STD-883 shall be tested as appropriate for device construction. Device classes Q and V, shall be tested as appropriate for devices construction, as determined in the device manufacturers QM plan.

查询"5962-8766301B2A"供应商

g. When specified in the purchase order or contract, a copy of the RHA delta limits shall be supplied.

4.5 Methods of inspection. Methods of inspection shall be specified as follows:

4.5.1 Voltage and current. Unless otherwise specified, all voltages given are referenced to the microcircuit GND terminal. Currents given are conventional current and positive when flowing into the referenced terminal.

5. PACKAGING

5.1 Packaging requirements. The requirements for packaging shall be in accordance with MIL-M-38510 for device classes M, B, and S and MIL-I-38535 for device classes Q and V.

6. NOTES

6.1 Intended use. Microcircuits conforming to this drawing are intended for use for Government microcircuit applications (original equipment), design applications, and logistics purposes.

6.1.1 Replaceability. Microcircuits covered by this drawing will replace the same generic device covered by a contractor-prepared specification or drawing.

6.1.2 Substitutability. Device classes B and Q devices will replace device class M devices.

6.2 Configuration control of SMD's. All proposed changes to existing SMD's will be coordinated with the users of record for the individual documents. This coordination will be accomplished in accordance with MIL-STD-481 using DD Form 1693, Engineering Change Proposal (Short Form).

6.3 Record of users. Military and industrial users shall inform Defense Electronics Supply Center when a system application requires configuration control and which SMD's are applicable to that system. DESC will maintain a record of users and this list will be used for coordination and distribution of changes to the drawings. Users of drawings covering microelectronic devices (FSC 5962) should contact DESC-ECC, telephone (513) 296-6047.

6.4 Comments. Comments on this drawing should be directed to DESC-ECC, Dayton, Ohio 45444, or telephone (513) 296-8525.

6.5 Symbols, definitions, and functional descriptions.

GND - - - - - - - - - - - - - - Ground zero voltage potential.
$I_{CC}$ - - - - - - - - - - - - - - Quiescent supply current.
$I_{IL}$ - - - - - - - - - - - - - - Input current low.
$I_{IH}$ - - - - - - - - - - - - - - Input current high.
$T_C$ - - - - - - - - - - - - - - Case temperature.
$T_A$ - - - - - - - - - - - - - - Ambient temperature.
$V_{CC}$ - - - - - - - - - - - - - - Positive supply voltage.
$C_C$ - - - - - - - - - - - - - - Control input terminal-to-GND capacitance.
$C_{PD}$ - - - - - - - - - - - - - - Power dissipation capacitance.
$V_{IC+}$ - - - - - - - - - - - - - - Positive input clamp voltage.
$V_{IC-}$ - - - - - - - - - - - - - - Negative input clamp voltage.
$t_W$ - - - - - - - - - - - - - - Trigger duration (width).
O/V - - - - - - - - - - - - - - Latch-up over-voltage.
O/I - - - - - - - - - - - - - - Latch-up over-current.

查询"5962-87663 01BA"供应商

6.6 One part - one part number system. The one part - one part number system described below has been developed to allow for transitions between identical generic devices covered by the four major microcircuit requirements documents (MIL-M-38510, MIL-H-38534, MIL-I-38535, and 1.2.1 of MIL-STD-883) without the necessity for the generation of unique PIN's. The four military requirements documents represent different class levels, and previously when a device manufacturer upgraded military product from one class level to another, the benefits of the upgraded product were unavailable to the Original Equipment Manufacturer (OEM), that was contractually locked into the original unique PIN. By establishing a one part number system covering all four documents, the OEM can acquire to the highest class level available for a given generic device to meet system needs without modifying the original contract parts selection criteria.

| Military documentation format | Example PIN under new system | Manufacturing source listing | Document listing |
|---|---|---|---|
| New MIL-M-38510 Military Detail Specifications (in the SMD format) | 5962-XXXXXZZ(B or S)YY | QPL-38510 (Part 1 or 2) | MIL-BUL-103 |
| New MIL-H-38534 Standardized Military Drawings | 5962-XXXXXZZ(H or K)YY | QML-38534 | MIL-BUL-103 |
| New MIL-I-38535 Standardized Military Drawings | 5962-XXXXXZZ(Q or V)YY | QML-38535 | MIL-BUL-103 |
| New 1.2.1 of MIL-STD-883 Standardized Military Drawings | 5962-XXXXXZZ(M)YY | MIL-BUL-103 | MIL-BUL-103 |

6.7 Sources of supply.

6.7.1 Sources of supply for device classes B and S. Sources of supply for device classes B and S are listed in QPL-38510.

6.7.2 Sources of supply for device classes Q and V. Sources of supply for device classes Q and V are listed in QML-38535. The vendors listed in QML-38535 have submitted a certificate of compliance (see 3.6 herein) to DESC-ECC and have agreed to this drawing.

6.7.3 Approved sources of supply for device class M. Approved sources of supply for class M are listed in MIL-BUL-103. The vendors listed in MIL-BUL-103 have agreed to this drawing and a certificate of compliance (see 3.6 herein) has been submitted to and accepted by DESC-ECC.

查询"5962-8766301B2A"供应商



10. SCOPE

10.1 Scope. This appendix contains the PIN substitution information to support the one part-one part number system. For new designs, after the date of this document the NEW PIN shall be used in lieu of the OLD PIN. For existing designs prior to the date of this document the NEW PIN can be used in lieu of the OLD PIN. This appendix is a mandatory part of the specification. The information contained herein is intended for compliance. The PIN substitution data shall be as follows.

20. APPLICABLE DOCUMENTS. This section is not applicable to this appendix.

30. SUBSTITUTION DATA

| New PIN | Old PIN |
|---|---|
| 5962-8766301MRX | 5962-8766301RX |
| 5962-8766301MSX | 5962-8766301SX |
| 5962-8766301M2X | 5962-87663012X |

查询"5962-8766301B2A"供应商

STANDARDIZED MILITARY DRAWING SOURCE APPROVAL BULLETIN

DATE: 92-07-09

Approved sources of supply for SMD 5962-87663 are listed below for immediate acquisition only and shall be added to MIL-BUL-103 during the next revision. MIL-BUL-103 will be revised to include the addition or deletion of sources. The vendors listed below have agreed to this drawing and a certificate of compliance has been submitted to and accepted by DESC-ECC. This bulletin is superseded by the next dated revision of MIL-BUL-103.

| Standardized military drawing PIN | Vendor CAGE number | Vendor similar PIN 1/ |
|---|---|---|
| 5962-8766301MRX | 27014 | 54ACT245DMQB |
| 5962-8766301MSX | 27014 | 54ACT245FMQB |
| 5962-8766301M2X | 27014 | 54ACT245LMQB |
| 5962-8766302MLX | 01295 | SNJ54ACT11245JT |
| 5962-8766302M3X | 01295 | SNJ54ACT11245FK |

1/ Caution. Do not use this number for item acquisition. Items acquired to this number may not satisfy the performance requirements of this drawing.

| Vendor CAGE number | Vendor name and address |
|---|---|
| 27014 | National Semiconductor<br>2900 Semiconductor Drive<br>P.O. Box 58090<br>Santa Clara, CA 95052-8090<br>Point-of-contact: 333 Western Avenue<br>South Portland, ME 04106 |
| 01295 | Texas Instruments, Incorporated<br>13500 N Central Expressway<br>P.O. Box 655303<br>Dallas, TX 75265<br>Point-of-contact: I-20 at FM 1788<br>Midland, TX 79711-0448 |

The information contained herein is disseminated for convenience only and the Government assumes no liability whatsoever for any inaccuracies in this information bulletin.