U32D Series

查询"E32D630HPN153MA92M"供应商

UNITED CHEMI-CON

- Large Can
- Screw Terminals
- High Ripple
- 6.3 to 400VDC Voltage Range
- Dimensions in Inches
- RoHS Compliant
- +105°C Maximum Temperature

The U32D series allows for extremely high ripple currents for applications such as inverter designs and motor controllers. This series of capacitors offers very large capacitance of up to 2.2F and a maximum temperature rating of +105°C which allows a high operating temperature without sacrificing life. These capacitors are available with a variety of high current English or Metric thread terminals. Mounting options available are a three-footed clamp or bottom stud. (A special order two-footed clamp is also available for selected diameters.) All case size dimensions are based on inches. Custom designs are available upon request.

Summary of Specifications

- **Screw terminals: high and low post, English and Metric thread.**
- **Capacitance range: 180µF to 2.2F.**
- **Voltage range: 6.3 to 400VDC.**
- **Category temperature range: −40°C to +105°C.**
- **Leakage current: 0.02CV(µA) or 5mA, whichever is smaller, after 5 minutes at +25°C.**
- **Standard capacitance tolerance: ±20%**
- **Nominal case size (D×L): D = 35mm (1.375") to 89mm (3.500"); L = 41mm (1.625") to 220mm (8.625").**
- **Rated lifetime: 2,000 hours at +105°C with rated ripple current applied.**

找PDF 维库一下 pdf.dzsc.com

U32D Specifications - Screw Terminals

查询"E32D630HPN153MA92M"供应商

Item	Characteristics
Category Temperature Range	−40 to +105°C
Rated Voltage Range	6.3 to 400VDC
Capacitance Range	180μF to 2.2F at +25°C, 120Hz
Capacitance Tolerance	±20% (M) at +25°C, 120Hz
Leakage Current	I = 0.02CV (μA) or 5mA, whichever is smaller, after 5 minutes at +25°C. Where I = Max. leakage current (μA), C = Nominal capacitance (μF) and V = Rated voltage (V)
Rated Ripple Current Multipliers	Ambient Temperature (°C)

≤ +45°C	+65°C	+85°C	+105°C
1.41	1.29	1.00	0.57

Frequency (Hz)

DC Rated Voltage	Case Diameter	50Hz	120Hz	300Hz	1kHz	10kHz	50kHz
6.3-50V	Ø35-Ø76	0.95	1.00	1.03	1.05	1.09	1.12
63-80V	Ø35	0.90	1.00	1.06	1.10	1.18	1.22
	Ø51-Ø76	0.95	1.00	1.03	1.05	1.09	1.12
100V	Ø35	0.82	1.00	1.12	1.22	1.30	1.33
	Ø51	0.90	1.00	1.06	1.10	1.18	1.22
	Ø63-Ø76	0.95	1.00	1.03	1.05	1.09	1.12
160-250V	Ø35	0.80	1.00	1.19	1.34	1.46	1.52
	Ø51-Ø63	0.81	1.00	1.14	1.26	1.36	1.41
	Ø76	0.82	1.00	1.12	1.22	1.30	1.33
315-400V	Ø35-Ø89	0.80	1.00	1.19	1.34	1.46	1.52

Endurance (Load Life)	The following specifications shall be satisfied when the capacitors are restored to +25°C after subjecting them to DC voltage for 2,000 hours at +105°C with the rated ripple current applied. The sum of the DC voltage and peak AC voltage must not exceed the full rated voltage of the capacitors. Capacitance change: ≤ 20% from initial measurement ESR change : ≤ 200% of initial specified limit Leakage current : ≤ initial specified limit
Shelf Test	The following specifications shall be satisfied when the capacitors are restored to +25°C after exposing them for 500 hours at +105°C without voltage applied. The rated voltage shall be applied to the capacitors for a minimum of 30 minutes, at least 24 hours and not more than 48 hours before the measurements. Capacitance change: ≤ 20% from initial measurement ESR change : ≤ 200% of initial specified limit Leakage current : ≤ initial specified limit

Diagram of Dimensions - Screw Terminals

查询"E32D630HPN153MA92M"供应商

Large Can/Screw Terminals

Unit: inches (mm)

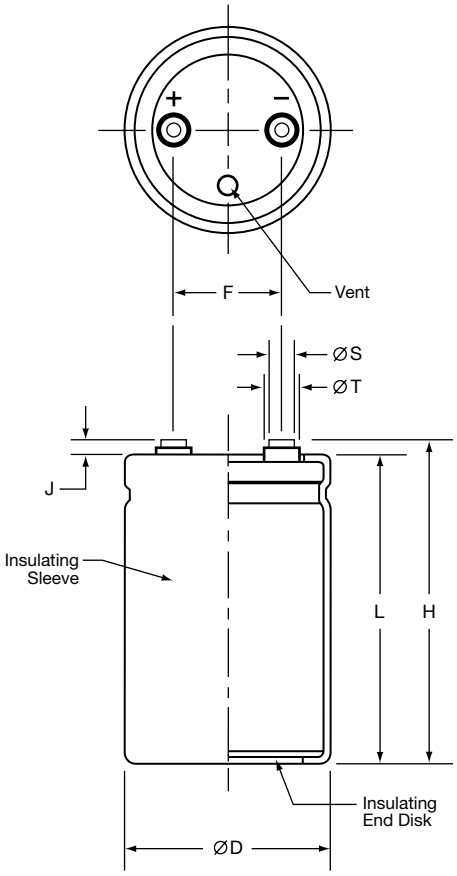

Case Dimensions

Case Size Code	ØD +0.080 (2.0)	L ±0.040 (1.0)	F ±0.010 (0.25)
A41	1.375 (35.0)	1.625 (41)	0.500 (12.7)
A54		2.125 (54)	
A67		2.625 (67)	
A79		3.125 (79)	
A92		3.625 (92)	
AA5		4.125 (105)	
AB7		4.625 (117)	
AD0		5.125 (130)	
AE3		5.625 (143)	
C48	2.000 (50.8)	1.875 (48)	0.875 (22.2)
C54		2.125 (54)	
C67		2.625 (67)	
C79		3.125 (79)	
C92		3.625 (92)	
CA5		4.125 (105)	
CB7		4.625 (117)	
CD0		5.125 (130)	
CE3		5.625 (143)	
D79	2.500 (63.5)	3.125 (79)	1.125 (28.6)
DA5		4.125 (105)	
DB7		4.625 (117)	
DD0		5.125 (130)	
DE3		5.625 (143)	
E92	3.000 (76.2)	3.625 (92)	1.250 (31.8)
EA5		4.125 (105)	
EB7		4.625 (117)	
ED0		5.125 (130)	
EE3		5.625 (143)	
EN0		8.625 (220)	
FA5	3.500 (89.0)	4.125 (105)	1.250 (31.8)
FB7		4.625 (117)	
FE3		5.625 (143)	

Terminal Specifications

Terminal Code	Available Case Diameter		Thread Size	Minimum Thread Depth	J ±0.020 (0.5)	H ±0.080 (2.0)	ØS ±0.010 (0.25)	ØT ±0.010 (0.25)
	ØD Code	ØD inches (mm)						
HP	C-E	1.375 – 3.000 (35.0 – 76.2)	10-32 NF-2B	0.375 (9.5)	0.250 (6.4)	L+J	0.313 (8.0)	0.438 (11.1)
LP	C-E	1.375 – 3.000 (35.0 – 76.2)	10-32 NF-2B	0.219 (5.6)	0.063 (1.6)	L+J	0.313 (8.0)	—
HL	C-E	1.375 – 3.000 (35.0 – 76.2)	M5x0.8-6H	0.375 (9.5)	0.250 (6.4)	L+J	0.313 (8.0)	0.438 (11.1)
ML	C-E	1.375 – 3.000 (35.0 – 76.2)	M5x0.8-6H	0.219 (5.6)	0.063 (1.6)	L+J	0.313 (8.0)	0.438 (11.1)
CD	D-E	2.500 – 3.000 (63.5 – 76.2)	M5x0.8-6H	0.335 (8.5)	0.200 (5.0)	L+J	0.512 (13.0)	0.740 (18.8)
CP	D-F	2.500 – 3.500 (63.5 – 89.0)	¼-28 NF-2B	0.344 (8.7)	0.093 (2.4)	L+J	0.689 (17.5)	—
CH	D-F	2.500 – 3.500 (63.5 – 89.0)	¼-28 NF-2B	0.468 (11.9)	0.250 (6.4)	L+J	0.689 (17.5)	—
CA	D-F	2.500 – 3.500 (63.5 – 89.0)	M6x1-6H	0.344 (8.7)	0.093 (2.4)	L+J	0.689 (17.5)	—
CS	D-F	2.500 – 3.500 (63.5 – 89.0)	M6x1-6H	0.468 (11.9)	0.250 (6.4)	L+J	0.689 (17.5)	—

Mounting Hardware - Screw Terminals

查询"E32D630HPN153MA92M"供应商

Type C: Three-Footed Clamp

Unit: mm (inches)

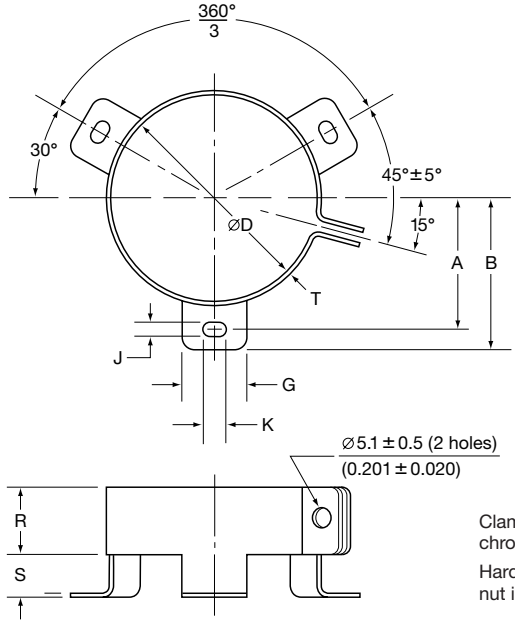

Clamp: Zinc with silver trivalent chromate post treatment.

Hardware: Screw, washer and hexagon nut included with each clamp.

Type C: Clamp Dimensions

Mounting Code	Case ØD	A ±1.0 (0.040)	B ±1.0 (0.040)	G ±1.0 (0.040)	J ±0.5 (0.020)	K ±0.5 (0.020)	R ±1.0 (0.040)	S ±1.0 (0.040)	T ±0.5 (0.020)
See Note	35.0 (1.375)	—	—	—	—	—	—	—	—
C	50.8 (2.000)	31.8 (1.250)	36.5 (1.437)	13.3 (0.524)	4.5 (0.177)	7.1 (0.280)	19.1 (0.751)	9.5 (0.374)	0.8 (0.032)
C	63.5 (2.500)	38.1 (1.500)	42.9 (1.689)	13.3 (0.524)	4.5 (0.177)	7.1 (0.280)	19.1 (0.751)	9.5 (0.374)	0.8 (0.032)
C	76.2 (3.000)	44.5 (1.750)	49.2 (1.937)	13.3 (0.524)	4.5 (0.177)	7.1 (0.280)	19.1 (0.751)	9.5 (0.374)	1.0 (0.040)
C	89.0 (3.500)	50.8 (2.000)	56.5 (2.224)	16.0 (0.630)	4.5 (0.177)	8.0 (0.313)	21.0 (0.827)	9.0 (0.354)	1.0 (0.040)

Note: Type B two-footed clamp available upon request for Ø35, Ø50.8, Ø63.5 and Ø76.2. Consult UCC for specifications.

Type S: Stud Mounting

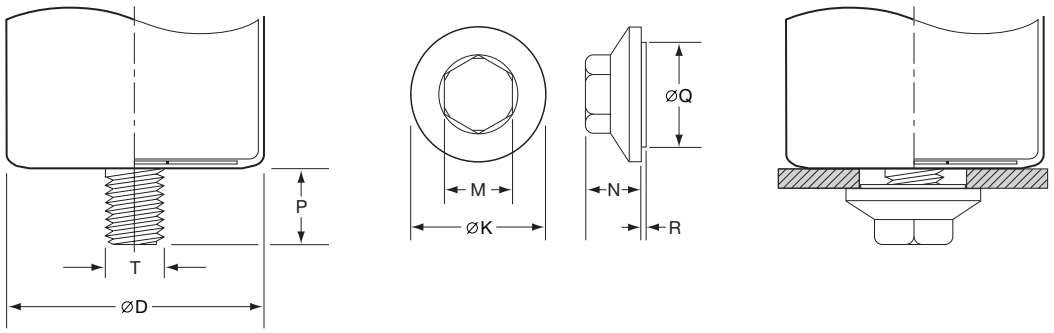

Type S: Stud Mounting Dimensions

Mounting Code	P ±1.0 (0.040)	T Thread Size	M ±1.0 (0.040)	N ±1.0 (0.040)	ØK ±2.0 (0.080)	ØQ ±1.0 (0.040)	R ±1.0 (0.040)
S	16.0 (0.630)	M12	19.0 (0.748)	18.0 (0.709)	30.0 (1.181)	22.0 (0.866)	1.40 (0.055)

Part Numbering System for U32D Series

When ordering, always specify complete 18-field global part number.

查询"E32D630HPN153MA92M"供应商

18 Fields

1	2	3	4	5	6	7	8	9	10	11	12	13	14	15	16	17	18
E	3	2	D	2	0	1	H	P	N	1	0	3	M	D	A	5	M

9 Supplement Code. Field 18.
- C = PET insulation with end disk.
- F = Coated can.
- M = Pb-free PVC insulation with end disk.

8 Case Size. Fields 15, 16 and 17.
The single letter diameter code is inserted in field 15.
- A = Ø35mm (Ø1.375")
- C = Ø50.8mm (Ø2.000")
- D = Ø63.5mm (Ø2.500")
- E = Ø76.2mm (Ø3.000")
- F = Ø89mm (Ø3.500")

The double character length code is inserted in fields 16 and 17. For lengths ≤99mm, insert the actual length rounded to nearest millimeter. For lengths of 100mm or more, insert the appropriate alpha numeric code as indicated below.
- 41 = 41mm (1.625")
- 48 = 48mm (1.875")
- 54 = 54mm (2.125")
- 67 = 67mm (2.625")
- 79 = 79mm (3.125")
- 92 = 92mm (3.625")
- A5 = 105mm (4.125")
- B7 = 117mm (4.625")
- D0 = 130mm (5.125")
- E3 = 143mm (5.625")
- N0 = 220mm (8.625")

7 Capacitance Tolerance. Field 14.
- M = ±20%

6 Capacitance. Fields 11, 12 and 13.
Expressed in Microfarads. The first two digits are significant figures inserted in fields 11 and 12, and the third digit inserted in field 13 indicates the number of zeros for capacitance of 10μF or more. R indicates the decimal point for capacitance less than 10μF (e.g. 1R0 = 1.0μF; 100 = 10μF; 101 = 100μF; 102 = 1,000μF; 103 = 10,000μF).

5 Mounting Hardware. Field 10.
- N = None.
- B = Two-footed clamp.
- C = Three-footed clamp.
- S = Stud mount.

4 Terminal Type. Fields 8 and 9.
- HP = High post 10-32 NF-2B screw thread.
- LP = Low post 10-32 NF-2B screw thread.
- HL = High post M5x0.8 screw thread.
- ML = Low post M5x0.8 screw thread.
- CD = UTE M5x0.8 screw thread.
- CP = Low post 1/4-28 NF-2B screw thread.
- CH = High post 1/4-28 NF-2B screw thread.
- CA = Low post M6x1 screw thread.
- CS = High post M6x1 screw thread.

3 DC Rated Voltage. Fields 5, 6 and 7.
Expressed in Volts. The first two digits are significant figures inserted in fields 5 and 6, and the third digit inserted in field 7 indicates the number of zeros for rated voltage of 10VDC or more. R indicates the decimal point for rated voltage less than 10VDC (e.g. 2R0 = 2.0VDC; 200 = 20VDC; 201 = 200VDC).

2 Series Name. Fields 2, 3 and 4.
Enter the 3-letter/digit series name in fields 2, 3 and 4. If the series name is only 2 letters/digits, place a dash in field 4. For a series name with more than 3 letters/digits, refer to the individual series for the appropriate 3-field series name.

1 Capacitor Type. Field 1.
Aluminum Electrolytic Capacitor (Polar).

Standard Voltage Ratings - Screw Terminals

查询"E32D630HPN153MA92M"供应商

Rated Voltage (WVDC)	Capacitance (µF)	Global Part Number†	Nominal Case Size* D×L (inches)	Case Size Code	Maximum ESR (mΩ) at +25°C, 120Hz	Rated Ripple Current (A rms) at +85°C, 120Hz
6.3 Volts 8 Volts Surge	39,000	E32D6R3HPN393MA41M	1.375 × 1.625	A41	39.9	7.03
	68,000	E32D6R3HPN683MA54M	1.375 × 2.125	A54	24.0	9.62
	82,000	E32D6R3HPN823MA67M	1.375 × 2.625	A67	19.5	10.87
	120,000	E32D6R3HPN124MA79M	1.375 × 3.125	A79	14.5	13.76
	150,000	E32D6R3HPN154MA92M	1.375 × 3.625	A92	12.2	15.53
	180,000	E32D6R3HPN184MAA5M	1.375 × 4.125	AA5	11.8	18.10
	220,000	E32D6R3HPN224MAD0M	1.375 × 5.125	AD0	9.1	20.93
	82,000	E32D6R3HPN823MC48M	2.000 × 1.875	C48	22.1	11.19
	120,000	E32D6R3HPN124MC54M	2.000 × 2.125	C54	16.2	13.53
	180,000	E32D6R3HPN184MC67M	2.000 × 2.625	C67	11.3	17.11
	220,000	E32D6R3HPN224MC79M	2.000 × 3.125	C79	9.2	20.41
	330,000	E32D6R3HPN334MC92M	2.000 × 3.625	C92	7.7	24.76
	390,000	E32D6R3HPN394MCA5M	2.000 × 4.125	CA5	6.4	27.19
	470,000	E32D6R3HPN474MCB7M	2.000 × 4.625	CB7	6.0	30.87
	560,000	E32D6R3HPN564MCE3M	2.000 × 5.625	CE3	4.9	35.78
	390,000	E32D6R3HPN394MD79M	2.500 × 3.125	D79	8.7	22.54
	560,000	E32D6R3HPN564MDA5M	2.500 × 4.125	DA5	6.3	29.81
	820,000	E32D6R3HPN824MDB7M	2.500 × 4.625	DB7	5.7	32.97
	680,000	E32D6R3HPN684ME92M	3.000 × 3.625	E92	8.3	26.88
	820,000	E32D6R3HPN824MEA5M	3.000 × 4.125	EA5	7.2	30.40
	1,000,000	E32D6R3HPN105MEB7M	3.000 × 4.625	EB7	6.6	33.32
	1,200,000	E32D6R3HPN125MED0M	3.000 × 5.125	ED0	6.1	36.04
	2,200,000	E32D6R3HPN225MEN0M	3.000 × 8.625	EN0	4.0	56.03
10 Volts 13 Volts Surge	33,000	E32D100HPN333MA41M	1.375 × 1.625	A41	39.7	7.03
	56,000	E32D100HPN563MA54M	1.375 × 2.125	A54	24.3	9.55
	68,000	E32D100HPN683MA67M	1.375 × 2.625	A67	19.6	10.79
	100,000	E32D100HPN104MA79M	1.375 × 3.125	A79	14.6	13.71
	120,000	E32D100HPN124MA92M	1.375 × 3.625	A92	12.5	14.66
	150,000	E32D100HPN154MAB7M	1.375 × 4.625	AB7	10.4	18.83
	180,000	E32D100HPN184MAD0M	1.375 × 5.125	AD0	9.2	20.80
	68,000	E32D100HPN683MC48M	2.000 × 1.875	C48	22.2	11.13
	100,000	E32D100HPN104MC54M	2.000 × 2.125	C54	16.3	13.48
	150,000	E32D100HPN154MC67M	2.000 × 2.625	C67	11.4	17.11
	180,000	E32D100HPN184MC79M	2.000 × 3.125	C79	9.3	20.28
	270,000	E32D100HPN274MC92M	2.000 × 3.625	C92	7.8	24.76
	390,000	E32D100HPN394MCB7M	2.000 × 4.625	CB7	6.0	30.55
	470,000	E32D100HPN474MCE3M	2.000 × 5.625	CE3	4.9	35.78
	330,000	E32D100HPN334MD79M	2.500 × 3.125	D79	8.8	22.40
	470,000	E32D100HPN474MDA5M	2.500 × 4.125	DA5	6.4	29.81
	560,000	E32D100HPN564MDB7M	2.500 × 4.625	DB7	5.7	33.95
	680,000	E32D100HPN684MDD0M	2.500 × 5.125	DD0	5.3	36.68
	560,000	E32D100HPN564ME92M	3.000 × 3.625	E92	8.3	26.88
	680,000	E32D100HPN684MEA5M	3.000 × 4.125	EA5	7.2	30.40
	820,000	E32D100HPN824MEB7M	3.000 × 4.625	EB7	6.5	33.32
	1,000,000	E32D100HPN105MED0M	3.000 × 5.125	ED0	6.1	36.04
	1,800,000	E32D100HPN185MEN0M	3.000 × 8.625	EN0	4.0	56.03
16 Volts 20 Volts Surge	22,000	E32D160HPN223MA41M	1.375 × 1.625	A41	41.4	6.26
	39,000	E32D160HPN393MA54M	1.375 × 2.125	A54	27.3	8.68
	47,000	E32D160HPN473MA67M	1.375 × 2.625	A67	19.9	9.80
	68,000	E32D160HPN683MA79M	1.375 × 3.125	A79	15.0	12.48
	82,000	E32D160HPN823MA92M	1.375 × 3.625	A92	12.8	14.04
	100,000	E32D160HPN104MAA5M	1.375 × 4.125	AA5	11.1	16.47
	120,000	E32D160HPN124MAD0M	1.375 × 5.125	AD0	9.5	19.11
	150,000	E32D160HPN154MAE3M	1.375 × 5.625	AE3	9.3	21.33
	47,000	E32D160HPN473MC48M	2.000 × 1.875	C48	22.7	10.18
	68,000	E32D160HPN683MC54M	2.000 × 2.125	C54	16.7	12.38
	100,000	E32D160HPN104MC67M	2.000 × 2.625	C67	11.7	15.75
	120,000	E32D160HPN124MC79M	2.000 × 3.125	C79	9.6	18.66

†For terminal, mounting and construction options, refer to the part numbering system for descriptions and codes.
*** Refer to diagram of dimensions for detailed case size specifications.**

Standard Voltage Ratings - Screw Terminals

查询"E32D630HPN153MA92M"供应商

Rated Voltage (WVDC)	Capacitance (µF)	Global Part Number†	Nominal Case Size* D×L (inches)	Case Size Code	Maximum ESR (mΩ) at +25°C, 120Hz	Rated Ripple Current (A rms) at +85°C, 120Hz
16 Volts 20 Volts Surge	180,000	E32D160HPN184MC92M	2.000 × 3.625	C92	7.5	22.89
	220,000	E32D160HPN224MCA5M	2.000 × 4.125	CA5	7.0	25.40
	270,000	E32D160HPN274MCB7M	2.000 × 4.625	CB7	6.1	28.80
	330,000	E32D160HPN334MCE3M	2.000 × 5.625	CE3	5.2	33.82
	220,000	E32D160HPN224MD79M	2.500 × 3.125	D79	8.9	21.75
	330,000	E32D160HPN334MDA5M	2.500 × 4.125	DA5	6.5	28.62
	390,000	E32D160HPN394MDB7M	2.500 × 4.625	DB7	5.9	32.66
	470,000	E32D160HPN474MDD0M	2.500 × 5.125	DD0	5.4	34.54
	390,000	E32D160HPN394ME92M	3.000 × 3.625	E92	8.5	26.07
	470,000	E32D160HPN474MEA5M	3.000 × 4.125	EA5	7.4	29.56
	560,000	E32D160HPN564MEB7M	3.000 × 4.625	EB7	6.7	32.56
	680,000	E32D160HPN684MED0M	3.000 × 5.125	ED0	6.2	35.45
	820,000	E32D160HPN824MEE3M	3.000 × 5.625	EE3	5.4	37.58
	1,200,000	E32D160HPN125MEN0M	3.000 × 8.625	EN0	4.0	55.32
25 Volts 32 Volts Surge	15,000	E32D250HPN153MA41M	1.375 × 1.625	A41	41.3	6.27
	22,000	E32D250HPN223MA54M	1.375 × 2.125	A54	27.7	8.20
	33,000	E32D250HPN333MA67M	1.375 × 2.625	A67	19.5	9.88
	47,000	E32D250HPN473MA79M	1.375 × 3.125	A79	16.6	12.53
	56,000	E32D250HPN563MA92M	1.375 × 3.625	A92	12.8	13.71
	68,000	E32D250HPN683MAA5M	1.375 × 4.125	AA5	12.3	16.47
	82,000	E32D250HPN823MAD0M	1.375 × 5.125	AD0	9.4	19.11
	33,000	E32D250HPN333MC48M	2.000 × 1.875	C48	22.4	10.23
	47,000	E32D250HPN473MC54M	2.000 × 2.125	C54	16.6	12.42
	68,000	E32D250HPN683MC67M	2.000 × 2.625	C67	11.7	15.68
	82,000	E32D250HPN823MC79M	2.000 × 3.125	C79	9.6	18.76
	120,000	E32D250HPN124MC92M	2.000 × 3.625	C92	7.6	22.73
	180,000	E32D250HPN184MCB7M	2.000 × 4.625	CB7	6.1	28.80
	220,000	E32D250HPN224MCE3M	2.000 × 5.625	CE3	5.3	33.82
	150,000	E32D250HPN154MD79M	2.500 × 3.125	D79	8.9	21.63
	220,000	E32D250HPN224MDA5M	2.500 × 4.125	DA5	6.5	28.62
	270,000	E32D250HPN274MDB7M	2.500 × 4.625	DB7	5.9	32.66
	330,000	E32D250HPN334MDE3M	2.500 × 5.625	DE3	4.9	37.88
	270,000	E32D250HPN274ME92M	3.000 × 3.625	E92	8.6	25.92
	330,000	E32D250HPN334MEA5M	3.000 × 4.125	EA5	7.5	29.16
	390,000	E32D250HPN394MEB7M	3.000 × 4.625	EB7	6.8	32.31
	470,000	E32D250HPN474MED0M	3.000 × 5.125	ED0	6.3	35.16
	820,000	E32D250HPN824MEN0M	3.000 × 8.625	EN0	4.1	55.32
35 Volts 44 Volts Surge	10,000	E32D350HPN103MA41M	1.375 × 1.625	A41	45.8	5.94
	18,000	E32D350HPN183MA54M	1.375 × 2.125	A54	26.7	8.33
	22,000	E32D350HPN223MA67M	1.375 × 2.625	A67	21.6	9.40
	33,000	E32D350HPN333MA79M	1.375 × 3.125	A79	15.7	12.14
	39,000	E32D350HPN393MA92M	1.375 × 3.625	A92	13.6	13.60
	47,000	E32D350HPN473MAA5M	1.375 × 4.125	AA5	11.8	15.95
	56,000	E32D350HPN563MAB7M	1.375 × 4.625	AB7	10.4	17.35
	68,000	E32D350HPN683MAE3M	1.375 × 5.625	AE3	8.9	20.57
	22,000	E32D350HPN223MC48M	2.000 × 1.875	C48	24.1	9.86
	33,000	E32D350HPN333MC54M	2.000 × 2.125	C54	17.4	12.15
	47,000	E32D350HPN473MC67M	2.000 × 2.625	C67	12.4	15.34
	68,000	E32D350HPN683MC79M	2.000 × 3.125	C79	9.4	18.76
	82,000	E32D350HPN823MC92M	2.000 × 3.625	C92	7.9	22.26
	100,000	E32D350HPN104MCA5M	2.000 × 4.125	CA5	6.9	24.82
	120,000	E32D350HPN124MCB7M	2.000 × 4.625	CB7	6.1	28.03
	150,000	E32D350HPN154MCE3M	2.000 × 5.625	CE3	5.2	33.12
	100,000	E32D350HPN104MD79M	2.500 × 3.125	D79	8.8	21.88
	150,000	E32D350HPN154MDA5M	2.500 × 4.125	DA5	6.5	28.84
	220,000	E32D350HPN224MDB7M	2.500 × 4.625	DB7	5.8	32.08

†For terminal, mounting and construction options, refer to the part numbering system for descriptions and codes.
*** Refer to diagram of dimensions for detailed case size specifications.**

Standard Voltage Ratings - Screw Terminals

查询"E32D630HPN153MA92M"供应商

Rated Voltage (WVDC)	Capacitance (µF)	Global Part Number†	Nominal Case Size* D × L (inches)	Case Size Code	Maximum ESR (mΩ) at +25°C, 120Hz	Rated Ripple Current (A rms) at +85°C, 120Hz
35 Volts 44 Volts Surge	220,000	E32D350HPN224ME92M	3.000 × 3.625	E92	8.3	25.19
	270,000	E32D350HPN274MEB7M	3.000 × 4.625	EB7	6.6	32.81
	330,000	E32D350HPN334MED0M	3.000 × 5.125	ED0	6.2	35.45
	390,000	E32D350HPN394MEE3M	3.000 × 5.625	EE3	5.4	37.90
	560,000	E32D350HPN564MEN0M	3.000 × 8.625	EN0	4.0	56.03
50 Volts 63 Volts Surge	5,600	E32D500HPN562MA41M	1.375 × 1.625	A41	52.2	5.66
	10,000	E32D500HPN103MA54M	1.375 × 2.125	A54	30.3	7.25
	15,000	E32D500HPN153MA67M	1.375 × 2.625	A67	21.3	9.01
	18,000	E32D500HPN183MA79M	1.375 × 3.125	A79	17.9	10.92
	22,000	E32D500HPN223MA92M	1.375 × 3.625	A92	15.1	12.58
	27,000	E32D500HPN273MAA5M	1.375 × 4.125	AA5	12.9	15.23
	33,000	E32D500HPN333MAB7M	1.375 × 4.625	AB7	12.5	17.22
	39,000	E32D500HPN393MAE3M	1.375 × 5.625	AE3	9.7	20.56
	15,000	E32D500HPN153MC48M	2.000 × 1.875	C48	24.3	10.01
	18,000	E32D500HPN183MC54M	2.000 × 2.125	C54	19.4	11.50
	27,000	E32D500HPN273MC67M	2.000 × 2.625	C67	13.4	14.97
	39,000	E32D500HPN393MC79M	2.000 × 3.125	C79	10.1	19.30
	56,000	E32D500HPN563MC92M	2.000 × 3.625	C92	8.5	22.56
	68,000	E32D500HPN683MCB7M	2.000 × 4.625	CB7	6.5	27.67
	82,000	E32D500HPN823MCD0M	2.000 × 5.125	CD0	5.8	29.50
	100,000	E32D500HPN104MCE3M	2.000 × 5.625	CE3	5.6	34.03
	68,000	E32D500HPN683MD79M	2.500 × 3.125	D79	9.4	24.55
	100,000	E32D500HPN104MDA5M	2.500 × 4.125	DA5	6.8	31.43
	120,000	E32D500HPN124MDB7M	2.500 × 4.625	DB7	5.9	34.04
	150,000	E32D500HPN154MDE3M	2.500 × 5.625	DE3	5.1	37.63
	120,000	E32D500HPN124ME92M	3.000 × 3.625	E92	8.9	33.88
	150,000	E32D500HPN154MEA5M	3.000 × 4.125	EA5	7.8	36.22
	180,000	E32D500HPN184MEB7M	3.000 × 4.625	EB7	6.5	38.22
	220,000	E32D500HPN224MEE3M	3.000 × 5.625	EE3	5.7	44.44
	330,000	E32D500HPN334MEN0M	3.000 × 8.625	EN0	4.0	65.97
63 Volts 79 Volts Surge	4,700	E32D630HPN472MA41M	1.375 × 1.625	A41	57.1	5.18
	6,800	E32D630HPN682MA54M	1.375 × 2.125	A54	33.8	6.68
	10,000	E32D630HPN103MA67M	1.375 × 2.625	A67	23.9	7.36
	12,000	E32D630HPN123MA79M	1.375 × 3.125	A79	20.1	8.92
	15,000	E32D630HPN153MA92M	1.375 × 3.625	A92	16.6	10.39
	18,000	E32D630HPN183MAA5M	1.375 × 4.125	AA5	14.3	12.44
	22,000	E32D630HPN223MAB7M	1.375 × 4.625	AB7	12.3	14.06
	27,000	E32D630HPN273MAD0M	1.375 × 5.125	AD0	12.1	16.36
	10,000	E32D630HPN103MC48M	2.000 × 1.875	C48	26.7	8.18
	12,000	E32D630HPN123MC54M	2.000 × 2.125	C54	21.5	9.39
	22,000	E32D630HPN223MC67M	2.000 × 2.625	C67	14.8	13.52
	27,000	E32D630HPN273MC79M	2.000 × 3.125	C79	10.8	16.06
	39,000	E32D630HPN393MC92M	2.000 × 3.625	C92	9.1	20.62
	47,000	E32D630HPN473MCB7M	2.000 × 4.625	CB7	6.9	23.00
	56,000	E32D630HPN563MCD0M	2.000 × 5.125	CD0	6.2	26.34
	68,000	E32D630HPN683MCE3M	2.000 × 5.625	CE3	6.0	30.31
	47,000	E32D630HPN473MD79M	2.500 × 3.125	D79	9.6	22.05
	68,000	E32D630HPN683MDA5M	2.500 × 4.125	DA5	6.9	29.84
	82,000	E32D630HPN823MDB7M	2.500 × 4.625	DB7	6.2	29.93
	100,000	E32D630HPN104MDE3M	2.500 × 5.625	DE3	5.2	32.23
	82,000	E32D630HPN823ME92M	3.000 × 3.625	E92	8.9	29.71
	100,000	E32D630HPN104MEA5M	3.000 × 4.125	EA5	7.7	34.67
	120,000	E32D630HPN124MEB7M	3.000 × 4.625	EB7	6.9	35.58
	150,000	E32D630HPN154MEE3M	3.000 × 5.625	EE3	5.7	39.63
	220,000	E32D630HPN224MEN0M	3.000 × 8.625	EN0	4.0	53.86

†For terminal, mounting and construction options, refer to the part numbering system for descriptions and codes.
*** Refer to diagram of dimensions for detailed case size specifications.**

Standard Voltage Ratings - Screw Terminals

查询"E32D630HPN153MA92M"供应商

Rated Voltage (WVDC)	Capacitance (µF)	Global Part Number†	Nominal Case Size* D×L (inches)	Case Size Code	Maximum ESR (mΩ) at +25°C, 120Hz	Rated Ripple Current (A rms) at +85°C, 120Hz
80 Volts 100 Volts Surge	2,200	E32D800HPN222MA41M	1.375 × 1.625	A41	67.0	4.09
	3,900	E32D800HPN392MA54M	1.375 × 2.125	A54	44.2	5.84
	4,700	E32D800HPN472MA67M	1.375 × 2.625	A67	31.7	6.51
	6,800	E32D800HPN682MA79M	1.375 × 3.125	A79	23.0	8.67
	8,200	E32D800HPN822MA92M	1.375 × 3.625	A92	19.5	9.92
	10,000	E32D800HPN103MAA5M	1.375 × 4.125	AA5	19.0	10.36
	12,000	E32D800HPN123MAD0M	1.375 × 5.125	AD0	14.0	12.19
	4,700	E32D800HPN472MC48M	2.000 × 1.875	C48	34.3	6.27
	6,800	E32D800HPN682MC54M	2.000 × 2.125	C54	24.6	7.90
	10,000	E32D800HPN103MC67M	2.000 × 2.625	C67	17.0	10.19
	12,000	E32D800HPN123MC79M	2.000 × 3.125	C79	14.0	11.97
	18,000	E32D800HPN183MC92M	2.000 × 3.625	C92	10.4	15.66
	22,000	E32D800HPN223MCA5M	2.000 × 4.125	CA5	9.9	18.36
	27,000	E32D800HPN273MCB7M	2.000 × 4.625	CB7	8.5	21.35
	33,000	E32D800HPN333MCE3M	2.000 × 5.625	CE3	7.2	25.86
	22,000	E32D800HPN223MD79M	2.500 × 3.125	D79	10.6	16.52
	33,000	E32D800HPN333MDA5M	2.500 × 4.125	DA5	7.6	22.84
	39,000	E32D800HPN393MDB7M	2.500 × 4.625	DB7	6.8	23.76
	47,000	E32D800HPN473MDD0M	2.500 × 5.125	DD0	6.1	25.31
	39,000	E32D800HPN393ME92M	3.000 × 3.625	E92	8.9	23.66
	47,000	E32D800HPN473MEA5M	3.000 × 4.125	EA5	7.7	27.45
	56,000	E32D800HPN563MEB7M	3.000 × 4.625	EB7	6.9	31.38
	68,000	E32D800HPN683MED0M	3.000 × 5.125	ED0	6.4	33.51
	120,000	E32D800HPN124MEN0M	3.000 × 8.625	EN0	4.2	52.62
100 Volts 125 Volts Surge	1,500	E32D101HPN152MA41M	1.375 × 1.625	A41	80.9	4.14
	2,700	E32D101HPN272MA54M	1.375 × 2.125	A54	45.9	5.95
	3,900	E32D101HPN392MA67M	1.375 × 2.625	A67	37.2	7.26
	4,700	E32D101HPN472MA79M	1.375 × 3.125	A79	27.1	8.82
	5,600	E32D101HPN562MA92M	1.375 × 3.625	A92	23.1	10.04
	6,800	E32D101HPN682MAA5M	1.375 × 4.125	AA5	19.5	11.03
	8,200	E32D101HPN822MAB7M	1.375 × 4.625	AB7	19.2	11.80
	10,000	E32D101HPN103MAE3M	1.375 × 5.625	AE3	14.1	13.44
	3,900	E32D101HPN392MC48M	2.000 × 1.875	C48	39.9	6.59
	4,700	E32D101HPN472MC54M	2.000 × 2.125	C54	28.7	7.59
	6,800	E32D101HPN682MC67M	2.000 × 2.625	C67	20.0	9.70
	10,000	E32D101HPN103MC79M	2.000 × 3.125	C79	14.5	12.62
	12,000	E32D101HPN123MC92M	2.000 × 3.625	C92	12.2	14.77
	15,000	E32D101HPN153MCA5M	2.000 × 4.125	CA5	10.2	17.51
	18,000	E32D101HPN183MCB7M	2.000 × 4.625	CB7	9.8	20.13
	22,000	E32D101HPN223MCE3M	2.000 × 5.625	CE3	7.5	24.38
	15,000	E32D101HPN153MD79M	2.500 × 3.125	D79	11.9	15.26
	22,000	E32D101HPN223MDA5M	2.500 × 4.125	DA5	8.5	20.85
	27,000	E32D101HPN273MDB7M	2.500 × 4.625	DB7	7.4	24.22
	33,000	E32D101HPN333MDD0M	2.500 × 5.125	DD0	6.6	28.05
	39,000	E32D101HPN393MDE3M	2.500 × 5.625	DE3	6.3	31.82
	27,000	E32D101HPN273ME92M	3.000 × 3.625	E92	9.3	21.56
	33,000	E32D101HPN333MEA5M	3.000 × 4.125	EA5	8.0	25.20
	39,000	E32D101HPN393MEB7M	3.000 × 4.625	EB7	7.2	28.69
	47,000	E32D101HPN473MED0M	3.000 × 5.125	ED0	6.6	30.09
	56,000	E32D101HPN563MEE3M	3.000 × 5.625	EE3	6.1	34.25
	82,000	E32D101HPN823MEN0M	3.000 × 8.625	EN0	4.3	50.23
160 Volts 200 Volts Surge	820	E32D161HPN821MA41M	1.375 × 1.625	A41	184.8	2.50
	1,500	E32D161HPN152MA54M	1.375 × 2.125	A54	101.2	3.62
	1,800	E32D161HPN182MA67M	1.375 × 2.625	A67	83.3	4.03
	2,700	E32D161HPN272MA79M	1.375 × 3.125	A79	56.8	5.46
	3,900	E32D161HPN392MAA5M	1.375 × 4.125	AA5	40.0	7.47
	4,700	E32D161HPN472MAD0M	1.375 × 5.125	AD0	33.4	8.81
	5,600	E32D161HPN562MAE3M	1.375 × 5.625	AE3	28.6	10.06

†For terminal, mounting and construction options, refer to the part numbering system for descriptions and codes.
*** Refer to diagram of dimensions for detailed case size specifications.**

Standard Voltage Ratings - Screw Terminals

查询"E32D630HPN153MA92M"供应商

Rated Voltage (WVDC)	Capacitance (µF)	Global Part Number†	Nominal Case Size* D × L (inches)	Case Size Code	Maximum ESR (mΩ) at +25°C, 120Hz	Rated Ripple Current (A rms) at +85°C, 120Hz
160 Volts 200 Volts Surge	2,200	E32D161HPN222MC48M	2.000 × 1.875	C48	74.6	4.29
	2,700	E32D161HPN272MC54M	2.000 × 2.125	C54	59.6	4.98
	3,900	E32D161HPN392MC67M	2.000 × 2.625	C67	41.1	6.36
	5,600	E32D161HPN562MC79M	2.000 × 3.125	C79	29.4	8.18
	6,800	E32D161HPN682MC92M	2.000 × 3.625	C92	24.0	9.63
	8,200	E32D161HPN822MCA5M	2.000 × 4.125	CA5	20.5	11.21
	10,000	E32D161HPN103MCB7M	2.000 × 4.625	CB7	17.0	12.99
	12,000	E32D161HPN123MCE3M	2.000 × 5.625	CE3	14.3	15.60
	8,200	E32D161HPN822MD79M	2.500 × 3.125	D79	22.6	11.28
	12,000	E32D161HPN123MDA5M	2.500 × 4.125	DA5	15.8	15.40
	18,000	E32D161HPN183MDB7M	2.500 × 4.625	DB7	11.8	19.77
	18,000	E32D161HPN183ME92M	3.000 × 3.625	E92	14.7	19.68
	22,000	E32D161HPN223MEB7M	3.000 × 4.625	EB7	11.3	24.09
	27,000	E32D161HPN273MED0M	3.000 × 5.125	ED0	9.9	27.93
	47,000	E32D161HPN473MEN0M	3.000 × 8.625	EN0	6.2	46.58
200 Volts 250 Volts Surge	680	E32D201HPN681MA41M	1.375 × 1.625	A41	192.4	2.28
	1,000	E32D201HPN102MA54M	1.375 × 2.125	A54	128.5	2.96
	1,500	E32D201HPN152MA67M	1.375 × 2.625	A67	86.3	3.68
	1,800	E32D201HPN182MA79M	1.375 × 3.125	A79	71.8	4.46
	2,200	E32D201HPN222MA92M	1.375 × 3.625	A92	59.1	5.14
	2,700	E32D201HPN272MAA5M	1.375 × 4.125	AA5	48.7	6.22
	3,300	E32D201HPN332MAB7M	1.375 × 4.625	AB7	40.4	7.03
	3,900	E32D201HPN392MAD0M	1.375 × 5.125	AD0	34.7	8.03
	1,500	E32D201HPN152MC48M	2.000 × 1.875	C48	110.7	4.09
	2,200	E32D201HPN222MC54M	2.000 × 2.125	C54	63.1	5.19
	3,300	E32D201HPN332MC67M	2.000 × 2.625	C67	42.2	6.76
	3,900	E32D201HPN392MC79M	2.000 × 3.125	C79	35.2	7.88
	5,600	E32D201HPN562MC92M	2.000 × 3.625	C92	25.1	10.09
	8,200	E32D201HPN822MCB7M	2.000 × 4.625	CB7	17.8	13.59
	10,000	E32D201HPN103MCE3M	2.000 × 5.625	CE3	14.8	16.44
	6,800	E32D201HPN682MD79M	2.500 × 3.125	D79	23.6	10.27
	10,000	E32D201HPN103MDA5M	2.500 × 4.125	DA5	16.5	14.06
	12,000	E32D201HPN123MDB7M	2.500 × 4.625	DB7	13.8	16.14
	15,000	E32D201HPN153MDE3M	2.500 × 5.625	DE3	11.5	19.74
	12,000	E32D201HPN123ME92M	3.000 × 3.625	E92	16.4	16.07
	15,000	E32D201HPN153MEA5M	3.000 × 4.125	EA5	13.7	18.99
	18,000	E32D201HPN183MEB7M	3.000 × 4.625	EB7	11.9	21.79
	22,000	E32D201HPN223MEE3M	3.000 × 5.625	EE3	9.8	26.29
	33,000	E32D201HPN333MEN0M	3.000 × 8.625	EN0	6.8	39.03
250 Volts 300 Volts Surge	470	E32D251HPN471MA41M	1.375 × 1.625	A41	273.0	1.89
	820	E32D251HPN821MA54M	1.375 × 2.125	A54	155.3	2.68
	1,200	E32D251HPN122MA67M	1.375 × 2.625	A67	106.5	3.29
	1,500	E32D251HPN152MA79M	1.375 × 3.125	A79	85.3	3.53
	1,800	E32D251HPN182MA92M	1.375 × 3.625	A92	71.3	4.02
	2,200	E32D251HPN222MAA5M	1.375 × 4.125	AA5	58.8	4.86
	2,700	E32D251HPN272MAB7M	1.375 × 4.625	AB7	48.5	5.51
	3,300	E32D251HPN332MAE3M	1.375 × 5.625	AE3	40.0	6.69
	1,200	E32D251HPN122MC48M	2.000 × 1.875	C48	112.1	3.17
	1,500	E32D251HPN152MC54M	2.000 × 2.125	C54	88.4	3.71
	2,200	E32D251HPN222MC67M	2.000 × 2.625	C67	60.1	4.78
	3,300	E32D251HPN332MC79M	2.000 × 3.125	C79	41.0	6.28
	3,900	E32D251HPN392MC92M	2.000 × 3.625	C92	34.6	7.29
	4,700	E32D251HPN472MCA5M	2.000 × 4.125	CA5	29.0	8.49
	5,600	E32D251HPN562MCB7M	2.000 × 4.625	CB7	24.7	9.72
	6,800	E32D251HPN682MCD0M	2.000 × 5.125	CD0	20.7	11.24
	5,600	E32D251HPN562MD79M	2.500 × 3.125	D79	27.7	9.32
	8,200	E32D251HPN822MDA5M	2.500 × 4.125	DA5	19.3	12.73

† For terminal, mounting and construction options, refer to the part numbering system for descriptions and codes.
*** Refer to diagram of dimensions for detailed case size specifications.**

Standard Voltage Ratings - Screw Terminals

查询"E32D630HPN153MA92M"供应商

Rated Voltage (WVDC)	Capacitance (µF)	Global Part Number†	Nominal Case Size* D×L (inches)	Case Size Code	Maximum ESR (mΩ) at +25°C, 120Hz	Rated Ripple Current (A rms) at +85°C, 120Hz
250 Volts 300 Volts Surge	10,000	E32D251HPN103MDB7M	2.500 × 4.625	DB7	18.5	14.74
	12,000	E32D251HPN123MDE3M	2.500 × 5.625	DE3	13.6	17.65
	10,000	E32D251HPN103ME92M	3.000 × 3.625	E92	18.8	14.67
	12,000	E32D251HPN123MEA5M	3.000 × 4.125	EA5	15.9	16.99
	15,000	E32D251HPN153MED0M	3.000 × 5.125	ED0	12.7	20.82
	18,000	E32D251HPN183MEE3M	3.000 × 5.625	EE3	11.2	23.78
	27,000	E32D251HPN273MEN0M	3.000 × 8.625	EN0	7.7	35.30
315 Volts 365 Volts Surge	220	E32D3B1HPN221MA41M	1.375 × 1.625	A41	750.3	1.59
	330	E32D3B1HPN331MA54M	1.375 × 2.125	A54	492.0	2.08
	470	E32D3B1HPN471MA67M	1.375 × 2.625	A67	343.8	2.52
	680	E32D3B1HPN681MA79M	1.375 × 3.125	A79	237.8	3.36
	820	E32D3B1HPN821MA92M	1.375 × 3.625	A92	197.2	3.14
	1,000	E32D3B1HPN102MAA5M	1.375 × 4.125	AA5	161.9	8.46
	1,200	E32D3B1HPN122MAD0M	1.375 × 5.125	AD0	134.9	9.96
	470	E32D3B1HPN471MC48M	2.000 × 1.875	C48	354.0	2.80
	680	E32D3B1HPN681MC54M	2.000 × 2.125	C54	243.1	3.53
	1,000	E32D3B1HPN102MC67M	2.000 × 2.625	C67	164.1	3.72
	1,200	E32D3B1HPN122MC79M	2.000 × 3.125	C79	135.9	4.37
	1,800	E32D3B1HPN182MC92M	2.000 × 3.625	C92	91.0	5.72
	2,200	E32D3B1HPN222MCA5M	2.000 × 4.125	CA5	75.0	6.70
	2,700	E32D3B1HPN272MCB7M	2.000 × 4.625	CB7	61.3	7.80
	3,300	E32D3B1HPN332MCE3M	2.000 × 5.625	CE3	50.3	9.44
	2,200	E32D3B1HPN222MD79M	2.500 × 3.125	D79	77.0	6.75
	3,300	E32D3B1HPN332MDA5M	2.500 × 4.125	DA5	51.7	9.32
	3,900	E32D3B1HPN392MDB7M	2.500 × 4.625	DB7	43.7	10.63
	4,700	E32D3B1HPN472MDD0M	2.500 × 5.125	DD0	36.9	12.22
	3,900	E32D3B1HPN392ME92M	3.000 × 3.625	E92	45.7	10.58
	4,700	E32D3B1HPN472MEA5M	3.000 × 4.125	EA5	38.2	12.28
	5,600	E32D3B1HPN562MEB7M	3.000 × 4.625	EB7	32.4	14.03
	6,800	E32D3B1HPN682MED0M	3.000 × 5.125	ED0	27.2	16.19
	8,200	E32D3B1HPN822MEE3M	3.000 × 5.625	EE3	23.1	18.53
	12,000	E32D3B1HPN123MEN0M	3.000 × 8.625	EN0	16.0	27.17
350 Volts 400 Volts Surge	180	E32D351HPN181MA41M	1.375 × 1.625	A41	882.3	1.43
	330	E32D351HPN331MA54M	1.375 × 2.125	A54	475.0	2.08
	470	E32D351HPN471MA67M	1.375 × 2.625	A67	332.0	2.52
	560	E32D351HPN561MA79M	1.375 × 3.125	A79	277.6	3.05
	680	E32D351HPN681MA92M	1.375 × 3.625	A92	228.5	3.36
	820	E32D351HPN821MAA5M	1.375 × 4.125	AA5	189.6	3.43
	1,000	E32D351HPN102MAB7M	1.375 × 4.625	AB7	156.0	3.87
	1,200	E32D351HPN122MAD0M	1.375 × 5.125	AD0	130.0	4.45
	470	E32D351HPN471MC48M	2.000 × 1.875	C48	342.0	2.80
	680	E32D351HPN681MC54M	2.000 × 2.125	C54	235.0	3.53
	1,000	E32D351HPN102MC67M	2.000 × 2.625	C67	156.0	3.72
	1,200	E32D351HPN122MC79M	2.000 × 3.125	C79	131.3	4.37
	1,800	E32D351HPN182MC92M	2.000 × 3.625	C92	88.0	5.72
	2,200	E32D351HPN222MCB7M	2.000 × 4.625	CB7	71.9	7.04
	2,700	E32D351HPN272MCD0M	2.000 × 5.125	CD0	59.0	8.18
	2,200	E32D351HPN222MD79M	2.500 × 3.125	D79	75.0	6.75
	3,300	E32D351HPN332MDA5M	2.500 × 4.125	DA5	50.0	9.32
	3,900	E32D351HPN392MDB7M	2.500 × 4.625	DB7	42.0	10.63
	4,700	E32D351HPN472MDE3M	2.500 × 5.625	DE3	35.0	12.76
	3,900	E32D351HPN392ME92M	3.000 × 3.625	E92	44.0	10.58
	4,700	E32D351HPN472MEA5M	3.000 × 4.125	EA5	37.0	12.28
	5,600	E32D351HPN562MEB7M	3.000 × 4.625	EB7	32.0	14.03
	6,800	E32D351HPN682MED0M	3.000 × 5.125	ED0	27.0	16.19
	10,000	E32D351HPN103MEN0M	3.000 × 8.625	EN0	17.9	24.81

†For terminal, mounting and construction options, refer to the part numbering system for descriptions and codes.
*** Refer to diagram of dimensions for detailed case size specifications.**

Standard Voltage Ratings - Screw Terminals

查询"E32D630HPN153MA92M"供应商

Rated Voltage (WVDC)	Capacitance (µF)	Global Part Number†	Nominal Case Size* D × L (inches)	Case Size Code	Maximum ESR (mΩ) at +25°C, 120Hz	Rated Ripple Current (A rms) at +85°C, 120Hz
350 Volts 400 Volts Surge	5,600	E32D351LLN562MFA5M	3.500 × 4.125	FA5	35.0	15.40
	6,800	E32D351LLN682MFB7M	3.500 × 4.625	FB7	30.0	17.28
	8,200	E32D351LLN822MFE3M	3.500 × 5.625	FE3	24.0	21.00
400 Volts 450 Volts Surge	180	E32D401HPN181MA41M	1.375 × 1.625	A41	806.0	1.43
	270	E32D401HPN271MA54M	1.375 × 2.125	A54	528.4	1.88
	390	E32D401HPN391MA67M	1.375 × 2.625	A67	364.1	2.30
	470	E32D401HPN471MA79M	1.375 × 3.125	A79	301.2	2.79
	680	E32D401HPN681MA92M	1.375 × 3.625	A92	209.0	2.86
	820	E32D401HPN821MAB7M	1.375 × 4.625	AB7	172.9	3.50
	1,000	E32D401HPN102MAD0M	1.375 × 5.125	AD0	142.0	4.06
	390	E32D401HPN391MC48M	2.000 × 1.875	C48	374.9	2.55
	560	E32D401HPN561MC54M	2.000 × 2.125	C54	259.0	3.21
	820	E32D401HPN821MC67M	2.000 × 2.625	C67	176.0	3.37
	1,000	E32D401HPN102MC79M	2.000 × 3.125	C79	143.3	3.99
	1,500	E32D401HPN152MC92M	2.000 × 3.625	C92	96.0	5.22
	2,200	E32D401HPN222MCB7M	2.000 × 4.625	CB7	66.0	7.04
	2,700	E32D401HPN272MCE3M	2.000 × 5.625	CE3	54.0	8.54
	1,800	E32D401HPN182MD79M	2.500 × 3.125	D79	82.0	6.10
	2,700	E32D401HPN272MDA5M	2.500 × 4.125	DA5	55.0	8.43
	3,300	E32D401HPN332MDB7M	2.500 × 4.625	DB7	45.4	9.78
	3,900	E32D401HPN392MDD0M	2.500 × 5.125	DD0	39.0	11.13
	3,300	E32D401HPN332ME92M	3.000 × 3.625	E92	48.0	9.73
	3,900	E32D401HPN392MEA5M	3.000 × 4.125	EA5	40.3	11.18
	4,700	E32D401HPN472MEB7M	3.000 × 4.625	EB7	34.0	12.86
	5,600	E32D401HPN562MED0M	3.000 × 5.125	ED0	29.0	14.69
	10,000	E32D401HPN103MEN0M	3.000 × 8.625	EN0	17.0	24.81
	4,700	E32D401LLN472MFA5M	3.500 × 4.125	FA5	36.0	15.19
	5,600	E32D401LLN562MFB7M	3.500 × 4.625	FB7	32.0	16.73
	6,800	E32D401LLN682MFE3M	3.500 × 5.625	FE3	25.0	20.58

†For terminal, mounting and construction options, refer to the part numbering system for descriptions and codes.
*** Refer to diagram of dimensions for detailed case size specifications.**