pdf.dzsc.com

查询"AK2-2PO"供应商

REVISION FOR DWG # 1PB-AK2-xPx-KDx				
REV	CH.NO.	DESCRIPTION	DATE	REVISED BY
-	-	ORIGINAL DESIGN	11/20/2007	PHILIPP E.

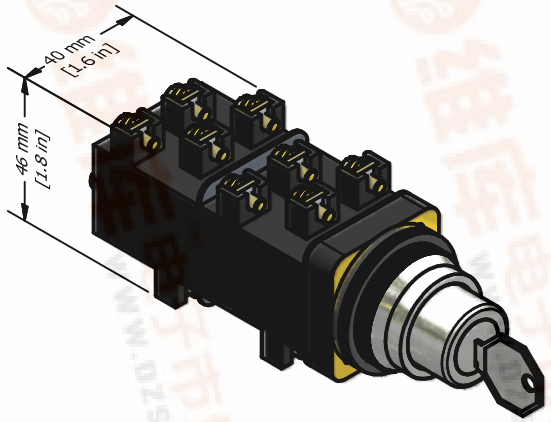

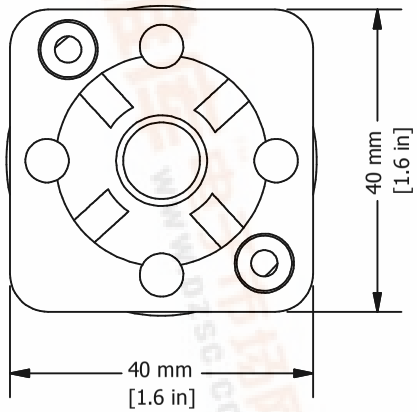

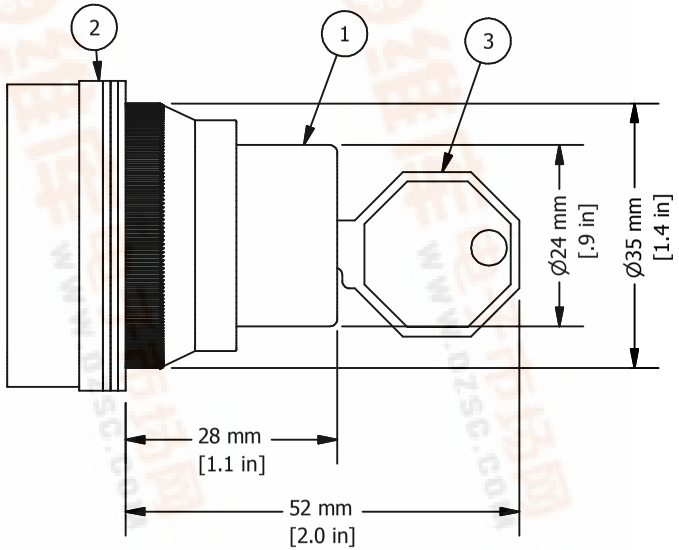

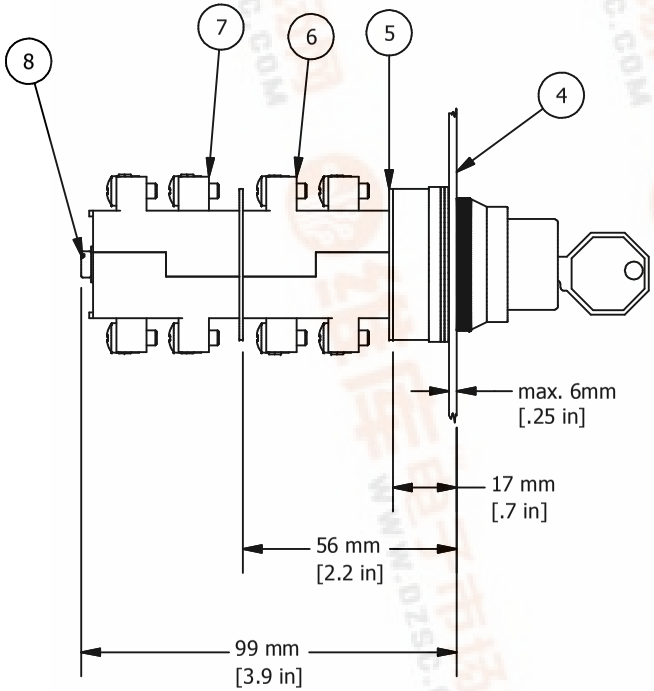

* = Operator includes 3x ARW1.2, 1x ARW3.2 and 1x Key

** = Switch Contacts include Contact element washer and two SC24 installation screws, if more than two contact blocks are used, additional screws must be purchased seperatly (SC45, SC65 or SC90)

ITEM	DESCRIPTION	CAT. NO.	FUNCTION	COLOR	MIN. QTY.	MAX. QTY.
1*	30 mm Key Selector Switch Metal Operator	AK2-2PB	2 Position Maintained, Left/Right	-	1	1
		AK2-2POSR	2 Position Momentary, Left	-	1	1
		AK2-2PI	2 Position Maintained, Right	-	1	1
		AK2-2PO	2 Position Maintained, Left	-	1	1
		AK2-3PB	3 Position Maintained, Left/Right	-	1	1
		AK2-3PC	3 Position Maintained, Center	-	1	1
		AK2-2PO-KD	2 Position Maintained, Left, Key 1	-	1	1
		AK2-2PO-KD1	2 Position Maintained, Left, Key 2	-	1	1
		AK2-2PO-KD2	2 Position Maintained, Left, Key 3	-	1	1
		AK2-2PO-KD4	2 Position Maintained, Left, Key 4	-	1	1
		AK2-2PO-KD5	2 Position Maintained, Left, Key 5	-	1	1
		AK2-3PC-KD	3 Position Maintained, Center, Key 1	-	1	1
		AK2-3PC-KD1	3 Position Maintained, Center, Key 2	-	1	1
		AK2-3PC-KD2	3 Position Maintained, Center, Key 3	-	1	1
		AK2-3PC-KD3	3 Position Maintained, Center, Key 4	Black	1	1
2*	Rubber washer	ARW1.2/ARW3.2	-	Black	1	4
3*	Replacment Key	KY30	-	-	1	1
4	Panel	-	-	-	-	-
5**	Contact Element washer	-	-	Black	1	2
6**	Switch Contacts	S11	-	Red	1	2
7**	Switch Contacts	S12	-	Yellow	1	2
8**	Contact Block Installation Screws	SC25/SC45/SC65/SC90	-	-	2	2

UNLESS OTHERWISE SPECIFIED:
- ALL DIMENSIONS ARE IN MILLIMETERS
- THIRD ANGLE PROJECTION

TOLERANCE		
XX	=	±1 mm
XX.X	=	±0.5 mm
XX.XX	=	±0.2 mm
ALL	=	- mm

METRIC

This Drawing is the property of

Altech Corp.®

35 Royal Road
Flemington, NJ 08822-6000
(908) 806-9400
Fax (908) 806-9490

AND IS A CONFIDENTIAL DISCLOSURELENT WITHOUT CONSIDERATION OTHER THAN THE BORROWER'S AGREEMENT THAT IT SHALL NOT BE REPRODUCED, COPIED, LENT OR DISPOSED OF DIRECTLY OR INDIRECTLY NOR USED FOR ANY PURPOSE OTHER THAN THAT FOR WHICH IT IS SPECIFICALLY FURNISHED.

TITEL 30 mm Key Selector Switch Metal Operator AK2-xPy-KDz

DRAWN BY: Philipp Ernstberger	11/20/2007	DRAWING NO.: 1PB-AK2-xPx-KDx	REV.: -
CHECKED BY: Laszlo Gyorgypal	11/20/2007		
RELEASED BY: Laszlo Gyorgypal	11/20/2007	SCALE: -	SHEET: 1 OF: 1

查询"AK2"相关供应商

This datasheet has been downloaded from:

www.EEworld.com.cn

Free Download

Daily Updated Database

100% Free Datasheet Search Site

100% Free IC Replacement Search Site

Convenient Electronic Dictionary

Fast Search System

www.EEworld.com.cn

All Datasheets Cannot Be Modified Without Permission

Copyright © Each Manufacturing Company